Cessna®

AIRCRAFT COMPANY

PAWNEE DIVISION

Wichita, Kansas

THIS PARTS CATALOG IS APPLICABLE
TO THE 1974 & SUBSEQUENT MODEL 182

THIS CATALOG SUPERSEDES 182 CATALOG
DATED: 1 SEPTEMBER 1974

1 OCTOBER 1975

P537-12–RAND–1000–10/75

INSERT LATEST CHANGED PAGES. DESTROY SUPERSEDED PAGES.

LIST OF EFFECTIVE PAGES

Dates of issue for original and changed pages are:

Original . . . 0 . . . 1 October 1975

TOTAL NUMBER OF PAGES IN THIS PUBLICATION IS 350 CONSISTING OF THE FOLLOWING:

Page No.	Change No.
Title	0
A	0
i thru iv	0
iva	0
ivb	0
V thru XXIV	0
1 thru 11	0
11A	0
11B	0
12 thru 35	0
35A	0
35B	0
36 thru 48	0
49 blank	0
50 thru 62	0
63 blank	0
64 thru 68	0
69 blank	0
70 thru 72	0
73 blank	0
74 thru 78	0
79 blank	0
80 thru 84	0
85 blank	0
86	0
87	0
87A	0
87B blank	0
88 thru 97	0
97A thru 97D	0
98 thru 107	0
107A	0
107B	0
107C	0
107D blank	0
108 thru 114	0
115 blank	0
116 thru 120	0
121 blank	0
121A	0
121B	0
122 thru 126	0
126A	0
126B	0
127	0
128	0
128A thru 128C	0
128D blank	0
129 thru 138	0
138A thru 138F	0
139	0
139A	0
139B blank	0
140 thru 174	0
175 blank	0
176	0
177	0
177A thru 177D	0
178 thru 182	0
183 blank	0
184 thru 191	0
191A	0
191B	0
192	0
193	0
194 blank	0
195 thru 201	0
201A thru 201D	0
202 thru 212	0
212A blank	0
212B	0
213 thru 228	0
228A thru 228D	0
229 thru 242	0
243 blank	0
244	0
245	0
246 blank	0
247 thru 276	0

Upon receipt of the second and subsequent changes to this book, personnel responsible for maintaining this publication in current status should ascertain that all previous changes have been received and incorporated.

* The asterisk indicates pages changed, added, or deleted by the current change.

INTRODUCTION.

This illustrated parts catalog has been prepared to aid you in easily and quickly identifying parts of the models covered herein.

This catalog features an index system consisting of:

1. An alphabetical index located in the front of the catalog.

2. A numerical index located in the back of the catalog, which lists all parts and figures in which they appear.

STANDARD PARTS.

Many parts having standard usage have been incorporated into the Cessna Standard System. Parts in this group are designated with the part number prefix "S".

For standard hardware items such as Tinnerman nuts, clamps, etc., "AN" and "NAS" numbers have been used.

USABLE ON CODES....Serial listings in this catalog are noted by a letter code located in the usable on code column which is the extreme right hand column of the parts list page. Usable on codes are applicable only to the figure on which they appear. The code letters and the serials to which they apply are listed at the end of the figure.

If no usable on code appears opposite a first column listing of the figure, the usage is applicable to all models and serials covered by this catalog. If no usable on code appears opposite any indented listing, the usage is applicable to all models and serials covered by the figure on which it appears.

Bold face type serials appearing on certain figures are for quick reference to large blocks of airplanes.

NON-INTERCHANGEABLE PARTS....When parts are not interchangeable with earlier models, all parts applicable to the particular usage are listed. The letter code for the individual part usage is listed in the usable on column opposite each part. Care should be exercised in determining proper serial when ordering to insure receipt of correct part.

INTERCHANGEABLE PARTS....When a later design part is completely interchangeable with the part it replaces, both parts will be serialized and the notation "when exhausted use___", or the abbreviation, "WEU ___" will be entered following the listing of the earlier design part. This means that the earlier design part should be used on airplanes to which they apply until the supply of these parts is exhausted---after which time the later design part must be used. This is done to simplify stocking of parts by our distributors and dealers. The earlier part is as good, physically and functionally, as the later design part---the difference being the later design part can be used on more than one block of airplane serials.

SYMBOLS & PART NUMBER TERMS.

NP - The symbol "NP" appearing in the units per assembly column denotes that the item it appears opposite is not procurable.

AR - The symbol "AR" appearing in the units per assembly column denotes "As Required" and is used to indicate bulk quantity where an indefinite amount is used.

The following is a list of abbreviations that may appear in the description nomenclature:

ALT - Alternate part	INSTL - Installation
ASSY - Assembly	LH - Left hand
BKI - Bulk item	RH - Right hand
FSO - For spares order	WEU - When exhausted use

Other key letter symbols spaced apart from and following the part nomenclature are for cataloging and manufacturing purposes only and are not to be considered by the customer.

A blank entry in the part number column appears before an unprocurable part or installation which is also denoted in the "Units Per Assembly" column by the use of the symbol NP.

GROUP ASSEMBLY PARTS LIST ARRANGEMENT.

This section lists all replaceable items in the airplane and these items are detailed on illustrations throughout the section. The index numbers on the illustration are keyed to each accompanying parts list. The purpose of the index numbers is to provide complete and positive identification of the article, but should not be used for procurement purposes.

a. The figure and index number column of the parts list shows the figure number once at the beginning of the list. The figure number is followed by a dash and the indexed number. The remaining index numbers are preceded by dash only.

b. The part number column identifies the item by part number.

c. In the description column, relationship of items covered is shown by the degree of indention of each item, for example: The wing assembly (Figure 3) is listed in column (1) of the description column. The wing structure, is the next lower assembly and is therefore listed in column (2).

d. If two or more assemblies contain a majority of identical parts or the assemblies are left or right hand, the assemblies are listed together and the next lower assemblies or detail parts are listed as common for both assemblies, with the differing parts coded for usage on the correct major assembly.

e. Attaching parts are listed immediately beneath the item to be attached and preceding any detail parts of the item. They are listed in the same column as the item they attach and are preceded by the caption "Attaching Parts." The end of the attaching parts listing is followed by a separating symbol ---*---.

f. The quantity listed in the "Units Per Assembly" column for attaching parts denotes the quantity necessary to attach only one part. Total quantity necessary to attach more than one part is obtained by multiplying the attaching parts quantity by the number of parts attached.

g. Component parts of the complete airplane which are not included in any assembly, but which are used in conjunction with, or attach to certain assemblies, are listed either preceding the first detail or following the last detail of the assembly or installation, and in the same column as the major assembly or installation.

h. The quantities listed in the "Units Per Assembly" column are the quantity used per figure.

ACCESSORY KITS.

For accessory kit listings, refer to separate Accessory Kit Catalog.

BULK ITEMS.

Certain items such as flexible air hose, rubber mouldings and channels, windshield sealing strips etc., are noted in the catalog listings as bulk items. These listings also note the cut length of these materials for one installation. When an item is listed as a bulk item, it will be supplied to the dealer in the most convenient bulk length or quantity. Reference to the cut length or quantity per installation provides for the most satisfactory disbursement to the customer.

HOW TO ORDER.

USE YOUR CATALOG TO ORDER PARTS. Use parts and Accessories Order Form, which will be supplied by Cessna on request. Give complete information on addresses and make sure the part number and part name are as shown in the catalog. Be sure to specify quantities. Specify how the order is to be shipped, otherwise it will be sent out in the manner that seems best to the shipper.

SERIAL, COLOR, & CORROSION PROOFING.

Be sure to indicate model and serial number of the airplane. Serial number is very important to properly identify parts used on each airplane. When color is involved refer to "Upholstery & Interior Trim" section for example. If corrosion proofing is desired add the letters "CP" following the part number.

DISTRIBUTOR ORDERS.

Distributors will send all orders to the factory with instructions as to the shipping destination. The factory prefers not to make C.O.D. shipments for the distributor and all billing will be made to the distributor in the case of direct shipments.

DEALER ORDERS.

Dealers will place all of their parts order requirements with their distributor. The factory will not honor orders received directly from a dealer. It will be necessary for us to forward it to the distributor for his action. Therefore, dealer orders sent direct to the distributor will result in much faster delivery on any parts that are required.

RETAIL ORDERS.

Retail orders will not be honored by the factory. They are to be placed with the dealer or distributor in the owner's territory and when received directly by the factory will be forwarded to the distributor from whose territory it was received. Considerable saving in time will result to the owner if his orders are placed with his dealer or distributor.

Cessna

Cessna Aircraft Company reserves the right to cancel, add or change the parts and assemblies described in this catalog without notice.

Cessna

"All aircraft, regardless of manufacturer, are certificated under model number designations. However, popular names are often used for marketing purposes. To provide a consistent method of referring to the various aircraft, model numbers will be used in this publication unless names are required to differentiate between versions of the same basic model. The following table provides a cross reference listing of popular name vs. model numbers."

NAME	MODEL YEAR	MODEL	SERIALS	
			BEGINNING	ENDING
182 & SKYLANE 182, SKYLANE & SKYLANE II	1974 1975	182P 182P	18262466 18263476	18263475 18264295
SKYLANE & SKYLANE II	1976	182P	18264296	
REIMS/CESSNA F182 SKYLANE & F182 SKYLANE II	1976	F182P	F1820001	

FINISH & TRIM PLATE

The "FINISH AND TRIM" plate is located on the left side of the airplane on the lower door jamb directly below the aircraft indification nameplate.

This plate indicates model year, interior color scheme and the exterior color combination.

Interpretation of information stamped on the Finish and Trim Plate is obtained by use of the Color Code Chart for the respective year.

Color Code Charts for yearly models appear on pages immediately following this page.

The Finish and Trim Plate is explained below. Explanatory remarks are keyed to the illustrated example.

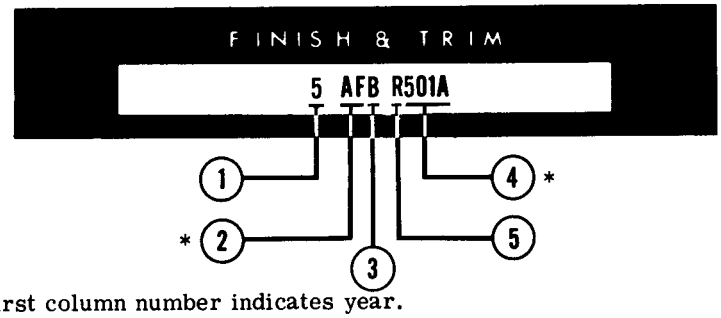

(1) First column number indicates year.

(2) Second column letter or letters indicate interior color code of aircraft. Refer to Color Code Chart for respective year to obtain color.

(3) The letter "B" following the interior code indicates optional black carpet.

(4) Third column number or numbers indicate exterior trim. The basic number is found on the Color Code Chart and indicates colors and type paint used on the aircraft.

(5) Standardized arctic color reversal is designated by the prefix "R" on the exterior color combination code.

* The special exterior and/or interior is denoted by the letters "SP" in lieu of the standard codes.

Interpretation of the example Finish and Trim Code 5-AFB-R501A that is obtained from 1975 Color Code Chart is:

5 = 1975 model year
AF = Chestnut Brown Interior Scheme
B = Black carpet (optional)
501A = Vestal White & Flag Red exterior
R501A = Vestal White & Flag Red exterior (color reversal)

MODEL 182 PAINT CODE CHART

MODEL 182

YEAR	INTERIOR COLOR CODE	INTERIOR COLOR CODE	INTERIOR COLOR
1974	4	AF	Chestnut Brown Vinyl & Fabric
		BF	Copen Blue Vinyl & Fabric
		CF	Olive Green Vinyl & Fabric
		DF	Sunset Red Vinyl & Fabric
		GF	Old Gold Vinyl & Fabric
		AV	Chestnut Brown Vinyl
		BV	Copen Blue Vinyl
		CV	Olive Green Vinyl
		DV	Sunset Red Vinyl
		GV	Old Gold Vinyl
		AL	Chestnut Brown Leather
		EL	Cloud Gray Leather
		FL	Ebony Black Leather
		GL	Old Gold Leather
		B	Optional Black Carpet

INTERIOR PAINT

INTERIOR COLOR CODE AF,AV&AL	BF & BV	CF & CV	DF & DV
BLACK SEMI-GLOSS CES1054-156 LACQUER	BLACK SEMI-GLOSS CES1054-156 LACQUER	BLACK SEMI-GLOSS CES1054-156 LACQUER	BLACK SEMI-GLOSS CES1054-156 LACQUER
CLOUD GRAY CES1054-531 LACQUER	CLOUD GRAY CES1054-531 LACQUER	CLOUD GRAY CES1054-531 LACQUER	CLOUD GRAY CES1054-531 LACQUER
DULL BLACK CES1054-193 LACQUER	DULL BLACK CES1054-193 LACQUER	DULL BLACK CES1054-193 LACQUER	DULL BLACK CES1054-193 LACQUER
CHESTNUT BROWN CES1054-B41 LACQUER	COPEN BLUE CES1054-B29 LACQUER	OLIVE GREEN CES1054-B33 LACQUER	SUNSET RED CES1054-B37 LACQUER
CLOUD GRAY CES1054-533 VINYL	CLOUD GRAY CES1054-533 VINYL	CLOUD GRAY CES1054-533 VINYL	CLOUD GRAY CES1054-533 VINYL

INTERIOR PAINT

INTERIOR COLOR CODE GF,GV&GL	EL	FL
BLACK SEMI-GLOSS CES1054-156 LACQUER	BLACK SEMI-GLOSS CES1054-156 LACQUER	BLACK SEMI-GLOSS CES1054-156 LACQUER
CLOUD GRAY CES1054-531 LACQUER	CLOUD GRAY CES1054-531 LACQUER	CLOUD GRAY CES1054-531 LACQUER
DULL BLACK CES1054-193 LACQUER	DULL BLACK CES1054-193 LACQUER	DULL BLACK CES1054-193 LACQUER
OLD GOLD CES1054-B25 LACQUER		BLACK HI-GLOSS CES1054-151 LACQUER
CLOUD GRAY CES1054-533 VINYL	CLOUD GRAY CES1054-533 VINYL	CLOUD GRAY CES1054-533 VINYL

SERIAL LISTING

18262466 THRU 18263475

MODEL 182

EXTERIOR PAINT

CODE	COLOR COMBINATIONS		
401		FLAG RED CES1054-A93	
401A	VESTAL WHITE CES1054-802		
402		MAPLE MAROON CES1054-B44	
402A	VESTAL WHITE CES1054-802		
403		TIGER YELLOW CES1054-966	
403A	VESTAL WHITE CES1054-802		
404		PEPPER GREEN CES1054-B50	
404A	VESTAL WHITE CES1054-802		
405		EMPRESS BLUE CES1054-832	
405A	VESTAL WHITE CES1054-802		
406		POLE BLUE CES1054-B47	
406A	VESTAL WHITE CES1054-802		
413	VESTAL WHITE CES1054-802	FLAG RED CES1054-A93	MAPLE MAROON CES1054-B44
418	VESTAL WHITE CES1054-802	SUMMER GOLD CES1054-B48	TIGER YELLOW CES1054-966
419	VESTAL WHITE CES1054-802	EMPRESS BLUE CES1054-832	POLE BLUE CES1054-B47
430	VESTAL WHITE CES1054-802	FLAG RED CES1054-A93	VELVET BLACK CES1054-807
432	VESTAL WHITE CES1054-802	TIGER YELLOW CES1054-966	VELVET BLACK CES1054-807
433	VESTAL WHITE CES1054-802	NUTMEG CES1054-A95	MAPLE MAROON CES1054-B44
434	VESTAL WHITE CES1054-802	PEPPER GREEN CES1054-B50	GROVE GREEN CES1054-B49
441	VESTAL WHITE CES1054-802	JAY GRAY CES1054-B46	VELVET BLACK CES1054-807

NOTE: WHEN ORDERING PAINT SPECIFY CES-1054 DASH NUMBER. EXAMPLE: CES1054-802

MODEL 182 PAINT CODE CHART MODEL 182

YEAR	INTERIOR COLOR CODE	INTERIOR COLOR CODE	COLOR	INTERIOR PAINT (INTERIOR COLOR CODE) AF,AV&AL	BF & BV	CF & CV	DF & DV
1975	5	*AF	Chestnut Brown Vinyl & Fabric	BLACK SEMI-GLOSS CES1054-156 LACQUER	BLACK SEMI-GLOSS CES1054-156 LACQUER	BLACK SEMI-GLOSS CES1054-156 LACQUER	BLACK SEMI-GLOSS CES1054-156 LACQUER
		BF	Copen Blue Vinyl & Fabric	CLOUD GRAY CES1054-531 LACQUER	CLOUD GRAY CES1054-531 LACQUER	CLOUD GRAY CES1054-531 LACQUER	CLOUD GRAY CES1054-531 LACQUER
		*CF	Olive Green Vinyl & Fabric				
		*DF	Sunset Red Vinyl & Fabric	DULL BLACK CES1054-193 LACQUER	DULL BLACK CES1054-193 LACQUER	DULL BLACK CES1054-193 LACQUER	DULL BLACK CES1054-193 LACQUER
		*GF	Old Gold Vinyl & Fabric	CHESTNUT BROWN CES1054-B41 LACQUER	COPEN BLUE CES1054-B29 LACQUER	OLIVE GREEN CES1054-B33 LACQUER	SUNSET RED CES1054-B37 LACQUER
		AV	Chestnut Brown Vinyl	CLOUD GRAY CES1054-533 VINYL	CLOUD GRAY CES1054-533 VINYL	CLOUD GRAY CES1054-533 VINYL	CLOUD GRAY CES1054-533 VINYL
		BV	Copen Blue Vinyl				
		CV	Olive Green Vinyl				
		DV	Sunset Red Vinyl				
		GV	Old Gold Vinyl				
		AL	Chestnut Brown Leather				
		EL	Cloud Gray Leather				
		FL	Ebony Black Leather				
		GL	Old Gold Leather				
		B	Optional Black Carpet				

INTERIOR PAINT (INTERIOR COLOR CODE) GF,GV&GL	EL	FL	
BLACK SEMI-GLOSS CES1054-156 LACQUER	BLACK SEMI-GLOSS CES1054-156 LACQUER	BLACK SEMI-GLOSS CES1054-156 LACQUER	
CLOUD GRAY CES1054-531 LACQUER	CLOUD GRAY CES1054-531 LACQUER	CLOUD GRAY CES1054-531 LACQUER	
DULL BLACK CES1054-193 LACQUER	DULL BLACK CES1054-193 LACQUER	DULL BLACK CES1054-193 LACQUER	
OLD GOLD CES1054-B25 LACQUER		BLACK HI-GLOSS CES1054-151 LACQUER	
CLOUD GRAY CES1054-533 VINYL	CLOUD GRAY CES1054-533 VINYL	CLOUD GRAY CES1054-533 VINYL	

SERIAL LISTING

18263476 THRU 18264295

EXTERIOR PAINT CODE	COLOR COMBINATIONS		
501		FLAG RED CES1054-A93	
501A	VESTAL WHITE CES1054-802		
502		SUMMER GOLD CES1054-B48	
502A	VESTAL WHITE CES1054-802		
503		TROPICAL ORANGE CES1054-774	
503A	VESTAL WHITE CES1054-802		
504		EMPRESS BLUE CES1054-832	
504A	VESTAL WHITE CES1054-802		
505		SATIN BLUE CES1054-B62	
505A	VESTAL WHITE CES1054-802		
506		SPRING GREEN CES1054-B64	
506A	VESTAL WHITE CES1054-802		
534	VESTAL WHITE CES1054-802	SUMMER GOLD CES1054-B48	SADDLE BROWN CES1054-B63
535	VESTAL WHITE CES1054-802	CARNIVAL YELLOW CES1054-A15	SUMMER GOLD CES1054-B48
537	VESTAL WHITE CES1054-802	EMPRESS BLUE CES1054-832	VELVET BLACK CES1054-807
540	VESTAL WHITE CES1054-802	FLAG RED CES1054-A93	VELVET BLACK CES1054-807
557	VESTAL WHITE CES1054-802	JAY GRAY CES1054-B46	VELVET BLACK CES1054-807
558	VESTAL WHITE CES1054-802	NUTMEG CES1054-A95	SATIN BLUE CES1054-B62
559	VESTAL WHITE CES1054-802	TROPICAL ORANGE CES1054-774	SATIN BLUE CES1054-B62
560	VESTAL WHITE CES1054-802	SPRING GREEN CES1054-B64	SADDLE BROWN CES1054-B63

NOTE: WHEN ORDERING PAINT SPECIFY CES-1054 DASH NUMBER. EXAMPLE: CES1054-802

* NOTE: INTERIOR COLOR & PAINT CODES,
AFD SAME AS AF EXCEPT SEATS ARE SUNSET RED
CFG SAME AS CF EXCEPT SEATS ARE OLD GOLD
DFA SAME AS DF EXCEPT SEATS ARE CHESTNUT BROWN
GFC SAME AS GF EXCEPT SEATS ARE OLIVE GREEN

SKYLANE & SKYLANE II — PAINT CODE CHART — SKYLANE & SKYLANE II

YEAR	INTERIOR COLOR CODE	INTERIOR COLOR CODE	COLOR	INTERIOR PAINT (INTERIOR COLOR CODE) AF,AV&AL	BF & BV	CF & CV	DF,DV&DL
1976	6	AF	Chestnut Brown Vinyl & Fabric	BLACK SEMI-GLOSS CES1054-156 LACQUER	BLACK SEMI-GLOSS CES1054-156 LACQUER	BLACK SEMI-GLOSS CES1054-156 LACQUER	BLACK SEMI-GLOSS CES1054-156 LACQUER
		BF	Sapphire Blue Vinyl & Fabric	CLOUD GRAY CES1054-531 LACQUER	CLOUD GRAY CES1054-531 LACQUER	CLOUD GRAY CES1054-531 LACQUER	CLOUD GRAY CES1054-531 LACQUER
		CF	Oro Green Vinyl & Fabric	DULL BLACK CES1054-193 LACQUER	DULL BLACK CES1054-193 LACQUER	DULL BLACK CES1054-193 LACQUER	DULL BLACK CES1054-193 LACQUER
		DF	Ruby Red Vinyl & Fabric	CHESTNUT BROWN CES1054-B41 LACQUER	SAPPHIRE BLUE CES1054-B73 LACQUER	ORO GREEN CES1054-B77 LACQUER	RUBY RED CES1054-B81 LACQUER
		GF	Topaz Gold Vinyl & Fabric	CLOUD GRAY CES1054-533 VINYL	CLOUD GRAY CES1054-533 VINYL	CLOUD GRAY CES1054-533 VINYL	CLOUD GRAY CES1054-533 VINYL
		AV	Chestnut Brown Vinyl				
		BV	Sapphire Blue Vinyl				
		CV	Oro Green Vinyl				
		DV	Ruby Red Vinyl				
		GV	Topaz Gold Vinyl				
		AL	Chestnut Brown Leather				
		EL	Cloud Gray Leather				
		FL	Ebony Black Leather				
		DL	Ruby Red Leather				
		B	Optional Black Carpet				

INTERIOR PAINT (INTERIOR COLOR CODE) GF & GV	EL	FL	SERIAL LISTING
BLACK SEMI-GLOSS CES1054-156 LACQUER	BLACK SEMI-GLOSS CES1054-156 LACQUER	BLACK SEMI-GLOSS CES1054-156 LACQUER	18264296 & ON
CLOUD GRAY CES1054-531 LACQUER	CLOUD GRAY CES1054-531 LACQUER	CLOUD GRAY CES1054-531 LACQUER	
DULL BLACK CES1054-193 LACQUER	DULL BLACK CES1054-193 LACQUER	DULL BLACK CES1054-193 LACQUER	
TOPAZ GOLD CES1054-B85 LACQUER		BLACK HI-GLOSS CES1054-151 LACQUER	
CLOUD GRAY CES1054-533 VINYL	CLOUD GRAY CES1054-533 VINYL	CLOUD GRAY CES1054-533 VINYL	

EXTERIOR PAINT CODE	COLOR COMBINATIONS		
620	VESTAL WHITE CES1054-802	LATIGO CES1054-B88	COOPER BROWN CES1054-B45
637	VESTAL WHITE CES1054-802	SATIN BLUE CES1054-B62	SERENA BLUE CES1054-A96
638	VESTAL WHITE CES1054-802	SATIN BLUE CES1054-B62	FLAG RED CES1054-A93
639	VESTAL WHITE CES1054-802	ITALIAN GOLD CES1054-834	CARNIVAL YELLOW CES1054-A15
640	VESTAL WHITE CES1054-802	SPANISH BRONZE CES1054-B90	LATIGO CES1054-B58
642	VESTAL WHITE CES1054-802	GRANADA GREEN CES1054-A97	CAMBIA GREEN CES1054-B89
647	VESTAL WHITE CES1054-802	CAMBIA GREEN CES1054-B89	GRANADA GREEN CES1054-A97
648	VESTAL WHITE CES1054-802	FLAG RED CES1054-A93	ROYAL MAROON CES1054-B91

NOTE: WHEN ORDERING PAINT SPECIFY CES-1054 DASH NUMBER. EXAMPLE: CES1054-802

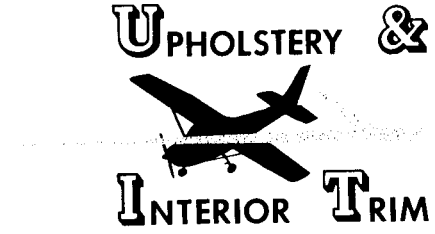
UPHOLSTERY &
INTERIOR TRIM

UPHOLSTERED PARTS - HOW TO ORDER

PARTS MARKED WITH A # FOLLOWING PART NUMBER REQUIRE A SECOND DASH NUMBER FOR COLOR & MATERIAL ALSO BE SURE TO SPECIFY SERIAL NUMBER OF AIRCRAFT

HOW TO DETERMINE 2nd DASH NUMBER

1. Find part number of desired part in catalog.
2. Refer to "FINISH & TRIM" plate, in the airplane, for your "Year Code" and "Interior Color Code."

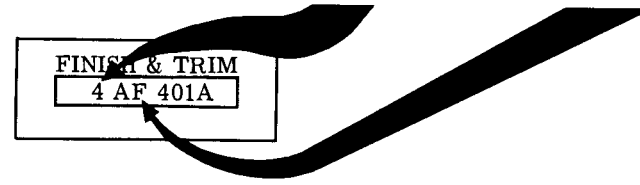

3. Add the "Year Code" and "Interior Color Code," to the part number from catalog.

EXAMPLE OF COMPLETE NUMBER

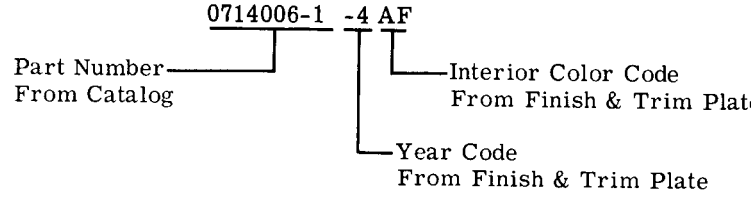

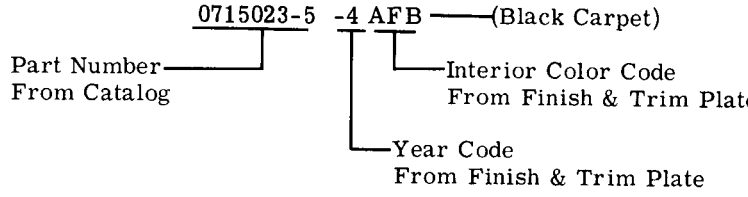

INTERIOR PAINTED OR PLASTIC PARTS
HOW TO ORDER

PARTS MARKED WITH A ▫ FOLLOWING PART NUMBER REQUIRE A SECOND DASH NUMBER FOR PROPER COLOR.

To obtain second dash number use of correct table, for your model year, is required.

To use table,

1. Find part number of desired part in catalog.
2. Refer to the "Finish and Trim" plate, in the airplane, for your "Interior Color Code."

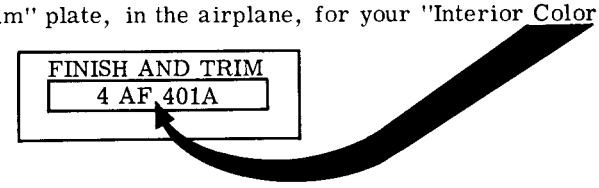

3. Locate part number from catalog in table.
4. Add dash number for color that appears under your "Interior Color Code."

STEP "3"

INTERIOR PAINTED OR PLASTIC PARTS
1974 MODEL YEAR
18262466 & ON

PART NUMBER	PART NAME	INTERIOR COLOR CODE (From Finish and Trim Plate) AF AV AL	BF BV	CF CV	DF DV	GF GV GL	EL	FL
0514017-3	TRIM - SEAT BOTTOM FWD	B40	B28	B32	B36	B24	532	279
0514058-1	RETAINER - SEAT BOTTOM	B40	B28	B32	B36	B24	532	279
0514076-1	TRIM ASSY - SEAT BACK	B40	B28	B32	B36	B24	532	279
0514083-1	TRIM ASSY - SEAT BACK	B40	B28	B32	B36	B24	532	279
0700702-6	PANEL - BAGGAGE DOOR	B40	B28	[illegible]	[illegible]	[illegible]	[illegible]	279
0700702-21	PANEL - CANTED	532	532	532	532	532	532	532
0705042-1	ESCUTCHEON - LH CABIN DOOR HANDLE	279	279	279	279	279	279	279
0705042-2	ESCUTCHEON - RH CABIN DOOR HANDLE	279	279	279	279	279	279	279
0711778-5	COVER ASSY WITH OXYGEN CUTOUTS	532	532	532	532	532	532	532
0711778-7	COVER ASSY WITHOUT OXYGEN CUTOUTS	532	532	532	532	532	532	532

STEP "4"

EXAMPLES OF COMPLETE NUMBER

0700702-6 -B40

Part Number From Catalog

2nd Dash Number From Table (Interior Color Code AF)

INTERIOR PAINTED OR PLASTIC PARTS
1974 MODEL YEAR
18262466 THRU 18263475

PART NUMBER	PART NAME	INTERIOR COLOR CODE (From Finish and Trim Plate) AF AV AL	BF BV	CF CV	DF DV	GF GV GL	EL	FL
0514017-3	TRIM - SEAT BOTTOM FWD	B40	B28	B32	B36	B24	532	279
0514058-1	RETAINER - SEAT BOTTOM	B40	B28	B32	B36	B24	532	279
0514076-1	TRIM ASSY - SEAT BACK	B40	B28	B32	B36	B24	532	279
0514083-1	TRIM ASSY - SEAT BACK	B40	B28	B32	B36	B24	532	279
0700702-6	PANEL - BAGGAGE DOOR	B40	B28	B32	B36	B24	532	279
0700702-21	PANEL - CANTED	532	532	532	532	532	532	532
0705042-1	ESCUTCHEON - LH CABIN DOOR HANDLE	279	279	279	279	279	279	279
0705042-2	ESCUTCHEON - RH CABIN DOOR HANDLE	279	279	279	279	279	279	279
0711778-5	COVER ASSY WITH OXYGEN CUTOUTS	532	532	532	532	532	532	532
0711778-7	COVER ASSY WITHOUT OXYGEN CUTOUTS	532	532	532	532	532	532	532
0711779-1	ESCUTCHEON - DOME LIGHT	532	532	532	532	532	532	532
0713483-1	COVER ASSY - INSTRUMENT PANEL LH	A59	A59	A59	A59	A59	A59	A59
0713483-4	COVER ASSY - INSTRUMENT PANEL LH POST LIGHTED	A59	A59	A59	A59	A59	A59	A59
0713484-1	COVER ASSY - UPPER RH	A59	A59	A59	A59	A59	A59	A59
0713484-2	COVER ASSY - POST LIGHTED RH	A59	A59	A59	A59	A59	A59	A59
0713484-5	COVER ASSY - UPPER RH USED WITH DUAL ALTIMETER	A59	A59	A59	A59	A59	A59	A59
0713484-6	COVER ASSY - POST LIGHTED RH USED WITH DUAL ALTIMETER	A59	A59	A59	A59	A59	A59	A59
0713811-5	COVER ASSY - CONSOLE	B40	B28	B32	B36	B24	532	279
0714006-1	TRIM STRIP - LH DOOR ABOVE BELTLINE	532	532	532	532	532	532	532
	BELOW BELTLINE	B41	B29	B33	B37	B25	NA	151
0714006-2	TRIM STRIP - RH DOOR ABOVE BELTLINE	532	532	532	532	532	532	532
	BELOW BELTLINE	B41	B29	B33	B37	B25	NA	151
0714010-1	TRIM - SEAT BOTTOM LH	B40	B28	B32	B36	B24	532	279
0714010-2	TRIM - SEAT BOTTOM RH	B40	B28	B32	B36	B24	532	279
0715010-2	MOULDING - AFT WINDOW	532	532	532	532	532	532	532
0715016-1	TRIM ASSY - SEAT BACK LH	B40	B28	B32	B36	B24	532	279
0715016-2	TRIM ASSY - SEAT BACK RH	B40	B28	B32	B36	B24	532	279
0715023-1	PANEL ASSY - AFT WALL	B40	B28	B32	B36	B24	532	279
0715023-3	AFT PANEL - LH	B40	B28	B32	B36	B24	532	279
0715023-5	PANEL ASSY	532	532	532	532	532	532	532
0715023-8	COVER - PANEL	532	532	532	532	532	532	532
0715023-16	AFT PANEL - RH	B40	B28	B32	B36	B24	532	279
0715024-1	COVER - LH	532	532	532	532	532	532	532
0715024-2	COVER - RH	532	532	532	532	532	532	532
0715032-15	MOULDING - DOOR WINDOW LH	532	532	532	532	532	532	532
0715032-16	MOULDING - DOOR WINDOW RH	532	532	532	532	532	532	532
0715044-1	MOULDING - LH	532	532	532	532	532	532	532
0715044-2	MOULDING - RH	532	532	532	532	532	532	532
0715044-3	MOULDING - LH WINDOW	532	532	532	532	532	532	532
0715044-4	MOULDING - RH WINDOW	532	532	532	532	532	532	532
0715044-5	MOULDING - DOOR SILL	532	532	532	532	532	532	532

INTERIOR PAINTED OR PLASTIC PARTS
1974 MODEL YEAR
18262466 THRU 18263475

PART NUMBER	PART NAME	INTERIOR COLOR CODE (From Finish and Trim Plate) AF AV AL	BF BV	CF CV	DF DV	GF GV GL	EL	FL
0715052-1	PANEL - LH	B40	B28	B32	B36	B24	532	279
0715052-2	PANEL - RH	B40	B28	B32	B36	B24	532	279
1200231-1	RETAINER - CABIN AIR LH	B41	B29	B33	B37	B25	531	151
1200231-2	RETAINER - CABIN AIR RH	B41	B29	B33	B37	B25	531	151
1213366-1	COVER - SWITCH MOUNTING BRACKET	710	710	710	710	710	710	710
1213377-1	COVER - PANEL CENTER	A59	A59	A59	A59	A59	A59	A59
1213381-1	COVER - RADIO CUTOUT	A59	A59	A59	A59	A59	A59	A59
1715047-3	ESCUTCHEON - LH	B40	B28	B32	B36	B24	532	279
1715047-4	ESCUTCHEON - RH	B40	B28	B32	B36	B24	532	279

INTERIOR PAINTED OR PLASTIC PARTS
1975 MODEL YEAR
18263476 THRU 18264295

PART NUMBER	PART NAME	INTERIOR COLOR CODE (From Finish and Trim Plate)										
		AF AV AL	BF BV	CF CV	DF DV	GF GV GL	EL	FL	AFD	CFG	DFA	GFC
0514112-2	TRIM - SEAT BACK	B40	B28	B32	B36	B24	532	279	B40	B32	B36	B24
0700702-5	PANEL - BAGGAGE DOOR	B40	B28	B32	B36	B24	532	279	B40	B32	B36	B24
0700702-21	PANEL - CANTED	532	532	532	532	532	532	532	532	532	532	532
0701079-1	COVER ASSY - INERTIA REEL	532	532	532	532	532	532	532	532	532	532	532
0705042-1	ESCUTCHEON - LH CABIN DOOR	279	279	279	279	279	279	279	279	279	279	279
0705042-2	ESCUTCHEON - RH CABIN DOOR	279	279	279	279	279	279	279	279	279	279	279
0711778-5	COVER ASSY WITH OXYGEN CUTOUTS	532	532	532	532	532	532	532	532	532	532	532
0711778-7	COVER ASSY WITHOUT OXYGEN CUTOUTS	532	532	532	532	532	532	532	532	532	532	532
0713483-5	COVER ASSY - INSTRUMENT PANEL LH	A59	A59	A59	A59	A59	A59	A59	A59	A59	A59	A59
0713483-6	COVER ASSY - POST LIGHTED LH	A59	A59	A59	A59	A59	A59	A59	A59	A59	A59	A59
0713484-1	COVER ASSY - UPPER RH	A59	A59	A59	A59	A59	A59	A59	A59	A59	A59	A59
0713484-2	COVER ASSY - POST LIGHTED RH	A59	A59	A59	A59	A59	A59	A59	A59	A59	A59	A59
0713484-5	COVER ASSY - UPPER RH DUAL ALTIMETER ONLY	A59	A59	A59	A59	A59	A59	A59	A59	A59	A59	A59
0713484-6	COVER ASSY - POST LIGHTED RH DUAL ALTIMETER ONLY	A59	A59	A59	A59	A59	A59	A59	A59	A59	A59	A59
0713534-1	COVER - DECK SKIN	279	279	279	279	279	279	279	279	279	279	279
0713811-5	COVER ASSY - CONSOLE	B40	B28	B32	B36	B24	532	279	B40	B32	B36	B24
0713972-2	COVER - CONSOLE LIGHT	532	532	532	532	532	532	532	532	532	532	532
0714006-1	TRIM STRIP - LH DOOR ABOVE BELT LINE	532	532	532	532	532	532	532	532	532	532	532
	BELOW BELT LINE	B41	B29	B33	B37	B25	NA	151	B41	B33	B37	B25
0714006-2	TRIM STRIP - RH DOOR ABOVE BELT LINE	532	532	532	532	532	532	532	532	532	532	532
	BELOW BELT LINE	B41	B29	B33	B37	B25	NA	151	B41	B33	B37	B25
0714010-1	TRIM - SEAT BOTTOM LH	B40	B28	B32	B36	B24	532	279	B36	B24	B40	B32
0714010-2	TRIM - SEAT BOTTOM RH	B40	B28	B32	B36	B24	532	279	B36	B24	B40	B32
0714023-1	TRIM ASSY - SEAT BACK LH	B40	B28	B32	B36	B24	532	279	B36	B24	B40	B32
0714023-2	TRIM ASSY - SEAT BACK RH	B40	B28	B32	B36	B24	532	279	B36	B24	B40	B32
0715010-2	MOULDING - AFT WINDOW	532	532	532	532	532	532	532	532	532	532	532
0715023-3	PANEL ASSY - LH	B40	B28	B32	B36	B24	532	279	B40	B32	B36	B24
0715023-5	PANEL ASSY	532	532	532	532	532	532	532	532	532	532	532
0715023-8	COVER - PANEL	532	532	532	532	532	532	532	532	532	532	532
0715023-16	PANEL ASSY - RH	B40	B28	B32	B36	B24	532	279	B40	B32	B36	B24
0715024-1	COVER - LH	532	532	532	532	532	532	532	532	532	532	532
0715024-2	COVER - RH	532	532	532	532	532	532	532	532	532	532	532
0715031-1	ESCUTCHEON	B40	B28	B32	B36	B24	532	279	B40	B32	B36	B24
0715032-15	MOULDING - DOOR WINDOW LH	532	532	532	532	532	532	532	532	532	532	532
0715032-16	MOULDING - DOOR WINDOW RH	532	532	532	532	532	532	532	532	532	532	532
0715024-1	COVER - LH	532	532	532	532	532	532	532	532	532	532	532
0715024-2	COVER - RH	532	532	532	532	532	532	532	532	532	532	532
0715031-1	ESCUTCHEON	B40	B28	B32	B36	B24	532	279	B40	B32	B36	B24
0715032-15	MOULDING - DOOR WINDOW LH	532	532	532	532	532	532	532	532	532	532	532
0715032-16	MOULDING - DOOR WINDOW RH	532	532	532	532	532	532	532	532	532	532	532
0715044-1	MOULDING - LH	532	532	532	532	532	532	532	532	532	532	532
0715044-2	MOULDING - RH	532	532	532	532	532	532	532	532	532	532	532
0715044-3	MOULDING - LH WINDOW	532	532	532	532	532	532	532	532	532	532	532
0715044-4	MOULDING - RH WINDOW	532	532	532	532	532	532	532	532	532	532	532
0715044-5	MOULDING - DOOR SILL	532	532	532	532	532	532	532	532	532	532	532

INTERIOR PAINTED OR PLASTIC PARTS

1975 MODEL YEAR

18263476 THRU 18264295

PART NUMBER	PART NAME	INTERIOR COLOR CODE (From Finish and Trim Plate)										
		AF AV AL	BF BV	CF CV	DF DV	GF GV GL	EL	FL	AFD	CFG	DFA	GFC
0715049-1	SPLICE - WINDLACE	B40	B28	B32	B36	B24	532	279	B40	B32	B36	B24
0715052-1	PANEL - LH AFT	B40	B28	B32	B36	B24	532	279	B40	B32	B36	B24
0715052-2	PANEL - RH	B40	B28	B32	B36	B24	532	279	B40	B32	B36	B24
0715053-3	PANEL ASSY - AFT WALL	B40	B28	B32	B36	B24	532	279	B40	B32	B36	B24
1200231-1	RETAINER - LH	B41	B29	B33	B37	B25	531	151	B41	B33	B37	B25
1200231-2	RETAINER - RH	B41	B29	B33	B37	B25	531	151	B41	B33	B37	B25
1213377-1	COVER - CENTER PANEL	A59	A59	A59	A59	A59	A59	A59	A59	A59	A59	A59
1213381-1	COVER ASSY - RADIO CUTOUT	A59	A59	A59	A59	A59	A59	A59	A59	A59	A59	A59
1213399-1	COVER - SWITCH MOUNTING BRACKET	710	710	710	710	710	710	710	710	710	710	710
1214098-1	TRIM - SEAT BACK	B40	B28	B32	B36	B24	532	279	B40	B32	B36	B24
1715047-3	ESCUTCHEON - LH	B40	B28	B32	B36	B24	532	279	B40	B32	B36	B24
1715047-4	ESCUTCHEON - RH	B40	B28	B32	B36	B24	532	279	B40	B32	B36	B24

INTERIOR PAINTED OR PLASTIC PARTS
1976 MODEL YEAR
18264296 & ON

PART NUMBER	PART NAME	INTERIOR COLOR CODE (From Finish and Trim Plate) AF AV AL	BF BV	CF CV	DF DV DL	GF GV	EL	FL
0514112-2	TRIM	B40	B72	B76	B80	B84	532	279
0700702-5	PANEL - BAGGAGE DOOR	B40	B72	B76	B80	B84	532	279
0700702-21	PANEL - CANTED	532	532	532	532	532	532	532
0701079-1	COVER ASSY - INERTIA REEL	532	532	532	532	532	532	532
0705042-1	ESCUTCHEON - LH CABIN DOOR HANDLE	279	279	279	279	279	279	279
0705042-2	ESCUTCHEON - RH CABIN DOOR HANDLE	279	279	279	279	279	279	279
0711778-5	COVER ASSY WITH OXYGEN CUTOUTS	532	532	532	532	532	532	532
0711778-7	COVER ASSY WITHOUT OXYGEN CUTOUTS	532	532	532	532	532	532	532
0711779-1	ESCUTCHEON - DOME LIGHT	532	532	532	532	532	532	532
0713484-9	COVER ASSY - UPPER RH	A59	A59	A59	A59	A59	A59	A59
0713484-10	COVER ASSY - UPPER RH POST LIGHTED	A59	A59	A59	A59	A59	A59	A59
0713484-11	COVER ASSY - UPPER RH DUAL ALTIMETER	A59	A59	A59	A59	A59	A59	A59
0713484-12	COVER ASSY - UPPER RH POST LIGHTED DUAL ALTIMETER	A59	A59	A59	A59	A59	A59	A59
0713488-1	COVER ASSY - UPPER LH	A59	A59	A59	A59	A59	A59	A59
0713488-2	COVER ASSY - UPPER LH POST LIGHTED	A59	A59	A59	A59	A59	A59	A59
0713811-7	COVER ASSY - CONSOLE	B40	B72	B76	B80	B84	532	279
0714006-1	TRIM STRIP - LH ABOVE BELTLINE	532	532	532	532	532	532	532
	BELOW BELTLINE	B41	B72	B77	B81	B85	NA	151
0714006-2	TRIM STRIP - RH ABOVE BELTLINE	532	532	532	532	532	532	532
	BELOW BELTLINE	B41	B72	B77	B81	B85	NA	151
0714023-1	TRIM ASSY - SEAT BACK LH	B40	B72	B76	B80	B84	532	279
0714023-2	TRIM ASSY - SEAT BACK RH	B40	B72	B76	B80	B84	532	279
0715010-2	MOLDING - AFT WINDOW	532	532	532	532	532	532	532
0715023-3	TRIM PANEL - AFT LH	B40	B72	B76	B80	B84	532	279
0715023-5	PANEL ASSY - BAGGAGE SHELF	532	532	532	532	532	532	532
0715023-8	COVER PANEL - BAGGAGE SHELF	532	532	532	532	532	532	532
0715023-16	TRIM PANEL - AFT RH	B40	B72	B76	B80	B84	532	279
0715024-1	COVER - LH	532	532	532	532	532	532	532
0715024-2	COVER - RH	532	532	532	532	532	532	532
0715032-15	MOLDING - DOOR WINDOW LH	532	532	532	532	532	532	532
0715032-16	MOLDING - DOOR WINDOW RH	532	532	532	532	532	532	532
0715044-3	MOLDING - LH WINDOW	532	532	532	532	532	532	532
0715044-4	MOLDING - RH WINDOW	532	532	532	532	532	532	532
0715044-5	MOLDING - DOOR SILL UPPER	532	532	532	532	532	532	532
0715044-8	MOLDING - RH	532	532	532	532	532	532	532
0715044-9	MOLDING - LH	532	532	532	532	532	532	532
0715049-1	SPLICE	B40	B72	B76	B80	B84	532	279
0715052-1	PANEL - LH	B40	B72	B76	B80	B84	532	279
0715052-2	PANEL - RH	B40	B72	B76	B80	B84	532	279
0715053-3	PANEL ASSY - AFT WALL	B40	B72	B76	B80	B84	532	279
0715068-1	ESCUTCHEON - FRESH AIR VENT	532	532	532	532	532	532	532
0715069-1	MOLDING - DOOR WINDOW RH	532	532	532	532	532	532	532
1200231-1	RETAINER - LH	B41	B73	B77	B81	B85	531	151
1200231-2	RETAINER - RH	B41	B73	B77	B81	B85	531	151
1213756-1	COVER ASSY - RADIO STACK	532	532	532	532	532	532	532
1714100-1	TRIM - SEAT BACK	B40	B72	B76	B80	B84	532	279
1715047-3	ESCUTCHEON - LH	B40	B72	B76	B80	B84	532	279
1715047-4	ESCUTCHEON - RH	B40	B72	B76	B80	B84	532	279

ALPHABETICAL INDEX

ALPHABETICAL INDEX

NOMENCLATURE	FIGURE
A	
ABRASION BOOT	15
ACCESSORY KITS-SEE ACCESSORY KIT CATALOG	
ACTUATOR FLAP	4
ADAPTER FUEL TANK	8
ADAPTER FUEL TANK DRAIN	8
ADAPTER OIL FILTER	90
ADAPTER OIL FILTER WRENCH	90
ADAPTER OIL TEMPERATURE	64
ADHESIVE GASKET	1
ADJUSTING ARM ALTERNATOR	98
AFT CABIN WINDOWS	29
AFT CARPET	49
AFT FLOORBOARD	26
AFT TAILCONE FUSELAGE	32
AILERON	10
AILERON BALANCE WEIGHT	10
AILERON BELLCRANK	10
AILERON CABLE	80
AILERON CONTROL SYSTEM	80
AILERON CONTROL TUBE	77
AILERON HINGE	10
AILERON PULLEY BRACKET	4
AILERON PULLEY BRACKET	18
AILERON PULLEY BRACKET	80
AILERON PUSH PULL ROD	10
AILERON RIB	10
AIR DUCT DRAIN TUBE	72
AIR FILTER CARBURETOR	66
AIR SCOOP	5
AIR SCOOP	72
AIR SCOOP	72A
AIR VENT DOOR	18
AIR VENT DOOR	72
AIR VENT DOOR	72A
AIR VENT FWD OUTSIDE	72A
AIR VENT INLET	18
AIR VENT INLET	72
AIR VENT INLET	72A
AIR VENT OUTSIDE	72
AIR VENT OUTSIDE	72A
AIR VENT SILENCER	72
AIRBOX CARBURETOR	65
AIRSPEED INDICATOR	55
AIRSPEED INDICATOR	55A
AIRSPEED INDICATOR TRUE	55
AIRSPEED INDICATOR TRUE	55A
ALTERNATOR	98
ALTERNATOR BELT	98
ALTERNATOR DRIVE BELT	66
ALTERNATOR 60 AMP	66
ALTIMETER	55
ALTIMETER	55A
ALTIMETER	86
ALTIMETER	86A
ALTIMETER DUAL	86
ALTIMETER ENCODING	86A
AMMETER	55
AMMETER	55A
ANCHOR BRAKE CYLINDER	21
ANCHOR BRAKE CYLINDER	75
ANTENNA VHF	13A
ARMREST	48
ARMREST	49
ASBESTOS GROMMET	23
ASH RECEIVER	49
ASSIST HANDLE	48
AUTO PILOT-NAVOMATIC SEE ELECTRONICS MANUAL	
AUXILIARY SEAT	54

NOMENCLATURE	FIGURE
A (Cont)	
AXLE	40
AXLE	40A
AXLE BOLT FERRULE	34
AXLE MAIN LANDING GEAR	40
AXLE MAIN LANDING GEAR	40A
AXLE SPACER	34
B	
BAFFLE OIL COOLER	69
BAFFLES ENGINE	69
BAG SOUNDPROOFING	50
BAGGAGE DOOR	46
BAGGAGE DOOR FUSELAGE	46
BAGGAGE DOOR JAMB	24
BAGGAGE DOOR LOCK	46
BAGGAGE DOOR PANEL	49
BAGGAGE DOOR SEAL	50
BAGGAGE DOOR SILL	24
BAGGAGE PLACARD	2
BAGGAGE SHELF REMOVABLE	47
BALANCE WEIGHT ELEVATOR	16
BARREL SHIMMY DAMPENER	39
BATTERY	93
BATTERY BOX	31
BATTERY BOX BASE	31
BATTERY CABLE	93
BATTERY CONTACTOR	93
BATTERY GROUND STRAP	93
BEACON LIGHT FLASHER	96
BEACON LIGHT FLASHING	96
BELLCRANK AILERON	10
BELLCRANK ELEVATOR	81
BELLCRANK RUDDER	14
BELT ALTERNATOR	98
BELT EXTENSION	59
BELT FRONT SEAT	51
BELT FRONT SEAT	52
BELT FRONT SEAT	99
BELT SEAT	53
BELT SEAT	54
BELT SEAT	99
BOARD DIODE	93
BONDING STRAP	65
BONDING STRAP ENGINE MOUNT	65
BOOT ABRASION	15
BOOT STEERING	18
BOTTOM REAR SEAT	53
BOWL FUEL STRAINER	88
BOX BATTERY	31
BRAKE	41
BRAKE	42
BRAKE	75
BRAKE & RUDDER PEDAL	75
BRAKE & RUDDER PEDALS	75
BRAKE CYLINDER	75
BRAKE CYLINDER ANCHOR	21
BRAKE CYLINDER ANCHOR	75
BRAKE CYLINDER BRACKET	75
BRAKE DISC	41
BRAKE HOSE	74
BRAKE HOUSING	74
BRAKE LINE	40
BRAKE LINE	40A
BRAKE LINE	74
BRAKE LINING	42

ALPHABETICAL INDEX

NOMENCLATURE	FIGURE
B (Cont)	
BRAKE MASTER CYLINDER	76
BRAKE PARKING	74
BRAKE PEDAL	75
BRAKE SYSTEM	74
BULB ALSO SEE LIGHTS	
BULB WING NAVIGATION LIGHT	3
BULK ITEMS-LIST OF	
BULKHEAD FORWARD DOORPOST	19
BULKHEAD FRONT DOORPOST	19
BULKHEAD LANDING GEAR	27
BULKHEAD REAR DOORPOST	25
BULKHEAD STA 65.33	27
BULKHEAD UPPER CABIN	24
BULKHEAD UPPER CABIN LH	24
BUS BAR	55
BUS BAR	55A
BUTTON ANTI FRICTION PLUG	11
C	
CABIN AIR CONTROL	55
CABIN AIR CONTROL	55A
CABIN AIR VENT SCOOP	5
CABIN DOOR LATCH	45
CABIN DOOR LH	43
CABIN DOOR RH	44
CABIN DOOR RIGHT	44A
CABIN DOOR STOP	43
CABIN DOOR STOP	44
CABIN DOOR STOP	44A
CABIN DOOR STRUCTURE	43
CABIN DOOR STRUCTURE	44
CABIN DOOR UPHOLSTERY	48
CABIN DOOR WEDGE	17
CABIN HEAT CONTROL	55
CABIN HEAT CONTROL	55A
CABIN HEAT CONTROL	73
CABIN HEATING	73
CABIN HEATING & DEFROSTING SYSTEM	73
CABIN SECTION CENTER	24
CABIN SECTION LOWER	26
CABIN SIDE & FLOORBOARD UPHOLSTERY	49
CABIN TOP	24
CABIN TOP	47
CABIN TOP & FIREWALL UPHOLSTERY	47
CABIN TOP FORWARD	24
CABIN TOP SKYLIGHT	24
CABIN UPHOLSTERY	49
CABIN VENTILATION OUTLET	72
CABIN VENTILATION SYSTEM	72
CABIN VENTILATION SYSTEM	72A
CABIN WINDOWS AFT	29
CABLES-CONTROL-SEE APPLICABLE SYSTEM	
CAM DOOR LOCK	43
CAM DOOR LOCK	46
CAM SEAT BACK	51
CAM SEAT BACK	53
CAP FIN TIP	13
CAP FIN TIP	13A
CAP FUEL	8
CAP HUB	34
CAP HUB	40
CAP HUB	40A
CAP LOWER NOSE	63
CAP NOSE GEAR HUB	34
CAP RUDDER TIP	14

NOMENCLATURE	FIGURE
C (Cont)	
CAP UPPER NOSE	63
CARBURETOR	66
CARBURETOR AIR FILTER	65
CARBURETOR AIR INTAKE DUCT	63
CARBURETOR AIR PROBE	65
CARBURETOR AIR TEMP GAGE	55
CARBURETOR AIR TEMP GAGE	55A
CARBURETOR AIR TEMP PROBE	65
CARBURETOR AIRBOX	65
CARBURETOR HEAT CONTROL	55
CARBURETOR HEAT CONTROL	55A
CARBURETOR HEAT CONTROL	64
CARBURETOR HEAT HOSE	65
CARGO TIE DOWN LATCH	58
CARPET	49
CARPET AFT	49
CARPET RUDDER BAR	49
CARPET TUNNEL	49
CASE OXYGEN MASK	92
CASE OXYGEN MASK	92A
CATALOG-HOW TO USE SEE INTRODUCTION	i
CENTER CABIN SECTION	24
CENTER FLOORBOARD	26
CESSNA NAMEPLATE	2
CHECK LIST PILOT	2
CIGAR LIGHTER	55
CIGAR LIGHTER	55A
CIRCUIT BREAKER	55
CIRCUIT BREAKER	55A
CIRCUIT BREAKER	96
CLEAR LENS	33
CLIP UPHOLSTERY	19
CLOCK ELECTRIC	55
CLOCK ELECTRIC	55A
CLUSTER INSTRUMENT	55
CLUSTER INSTRUMENT	55A
COLOR CHART-PAINT SEE PAGE	ivb
COMPASS	60
COMPONENTS ENGINE	66
COMPONENTS FRONT SECTION TUNNEL	21
CONNECTOR PITOT TUBE	5
CONNECTOR PITOT TUBE	86
CONSOLE	79
CONSOLE COVER	100
CONSOLE LIGHTS SWITCH	55
CONSOLE LIGHTS SWITCH	55A
CONSOLE STRUCTURE	20
CONTACTOR	93
CONTACTOR BATTERY	93
CONTACTOR STARTER	93
CONTINENTAL ENGINE	65
CONTROL CABLES-SEE INDIVIDUAL SYSTEM	
CONTROL SYSTEMS-SEE INDIVIDUAL SYSTEMS	
CONTROL WHEEL SEE WHEEL-CONTROL	
CONTROL-PUSHPULL-SEE ENGINE INSTL	
CONTROL-PUSHPULL-SEE INSTRUMENT PANEL	
CONTROLS DETAIL FLAP	84
COOLER ENGINE OIL	65
COOLER LARGE OIL	66
COOLER OIL	66
COURTESY LIGHT	97
COWL ENGINE	63
COWL FLAP	63
COWL FLAP CONTROL	70
COWL FLAP CONTROL BRACKET	22
COWL FLAP CONTROL BRACKET	63
COWL FLAP LEVER	79
COWL FLAPS CONTROL	70

ALPHABETICAL INDEX

NOMENCLATURE	FIGURE
C (Cont)	
COWL LOWER	63
COWL UPPER	63
CUP FUEL SAMPLER	9
CYLINDER & REGULATOR OXYGEN	92
CYLINDER & REGULATOR OXYGEN	92A
CYLINDER BRAKE	75
CYLINDER BRAKE MASTER	76
CYLINDER HEAD TEMP GAGE	55
CYLINDER HEAD TEMP GAGE	55A
D	
DAMPENER SHIMMY	39
DEADENER SOUND	1
DECALS-SEE PLACARDS	
DECK SKIN	18
DEFLECTOR	65
DEFROST CONTROL	55
DEFROST CONTROL	55A
DEFROST NOZZLE	73
DEFROST VALVE	73
DIODE	93
DIODE BOARD	93
DIODE MASTER SWITCH	55
DIODE MASTER SWITCH	55A
DIODE MASTER SWITCH	93
DIP STICK OIL	65
DIRECTIONAL GYRO	55
DIRECTIONAL GYRO	55A
DIRECTIONAL GYRO	91
DISC BRAKE	41
DISCHARGER STATIC	3
DISCHARGER STATIC	10
DISCHARGER STATIC	16
DISTRIBUTOR FUEL	89
DOME LIGHT LENS	93
DOME LIGHT SWITCH	93
DOME SPINNER	61
DOOR AIR VENT	18
DOOR AIR VENT	72
DOOR AIR VENT	72A
DOOR BAGGAGE	46
DOOR FUSELAGE BAGGAGE	46
DOOR JAMB	19
DOOR JAMB	46
DOOR JAMB AFT BAGGAGE	24
DOOR JAMB BAGGAGE	24
DOOR LATCH BRACKET	43
DOOR LATCH BRACKET	44
DOOR LATCH BRACKET	44A
DOOR LH CABIN	43
DOOR LOCK	43
DOOR MAP COMPARTMENT	57
DOOR OIL	63
DOOR RH CABIN	44
DOOR SILL	26
DOOR SILL	46
DOOR SILL	47
DOOR SILL BAGGAGE	24
DOOR SILL LOWER BAGGAGE	26
DOOR SILL UPPER BAGGAGE	24
DOOR STRUCTURE	44A
DOOR UPHOLSTERY CABIN	48
DOOR WINDOW	44
DOOR WINDOW	48
DOORPOST	19

NOMENCLATURE	FIGURE
D (Cont)	
DORSAL FAIRING	13
DORSAL FAIRING	13A
DORSAL FIN FAIRING	13
DORSAL FIN FAIRING	13A
DOWEL HUB ALIGNMENT	62
DRAIN VALVE	9
DRIVE BELT ALTERNATOR	66
DRIVE ELECTRIC TRIM	82A
DRIVE GEAR MAGNETO	66
DUAL ALTIMETER	86
DUCT CARBURETOR AIR INTAKE	63
DUCT HEATER	18
DUCT HEATER	22
E	
ECONOMY POWER INDICATOR	55
ECONOMY POWER INDICATOR	55A
ECONOMY POWER PROBE	64
ELBOW PRIMING JET	64
ELECTRIC CLOCK	55
ELECTRIC CLOCK	55A
ELECTRIC TRIM COMPONENTS ELEVATOR	82A
ELECTRIC TRIM DRIVE	82A
ELECTRIC TRIM ELEVATOR	82A
ELECTRIC TRIM HOUSING	82A
ELECTRICAL EQUIPMENT	93
ELECTRONIC EQUIPMENT-SEE ELECTRONICS MANUAL	
ELEMENT FILTER	91
ELEMENT KIT FILTER	90
ELEVATOR	16
ELEVATOR BELLCRANK	81
ELEVATOR BELLCRANK BRACKET	32
ELEVATOR CONTROL SYSTEM	81
ELEVATOR ELECTRIC TRIM	82A
ELEVATOR ELECTRIC TRIM COMPONENTS	82A
ELEVATOR PULLEY	82
ELEVATOR TAB STOP BLOCK	82
ELEVATOR TIP	16
ELEVATOR TRIM CONTROL	82
ELEVATOR TRIM CONTROL SYSTEM	82
ELEVATOR TRIM SUPPORT	20
ELEVATOR TRIM TAB	82B
ELEVATOR TRIM TAB ACTUATOR	82B
ELEVATOR TRIM WHEEL	79
EMBLEM CONTROL WHEEL	2
ENCODING ALTIMETER	86A
ENGINE	64
ENGINE	65
ENGINE BAFFLES	69
ENGINE COMPONENTS	66
ENGINE CONTINENTAL	65
ENGINE COWL	63
ENGINE MOUNT	65
ENGINE MOUNT STRINGER	18
ENGINE OIL COOLER	65
ENGINE OIL PLACARD	2
ENGINE PRIMER	55
ENGINE PRIMER	55A
EQUIPMENT ELECTRICAL	93
EQUIPMENT FUSELAGE	58
EQUIPMENT WINTERIZATION	71
ESCUTCHEON SILENCER	72
EXHAUST MUFFLER	68A
EXHAUST MUFFLER SHROUD	68
EXHAUST MUFFLER SHROUD	68A

ALPHABETICAL INDEX

NOMENCLATURE	FIGURE

E (Cont)

EXHAUST PIPE	68
EXHAUST STACK	68
EXHAUST STACK	68A
EXTENSION BELT	59
EXTENSION VALVE	34
EXTENSION VALVE	40
EXTENSION VALVE	40A
EXTERNAL POWER RECEPTACLE	93
EXTINGUISHER FIRE	58
EYEBOLT	49
EYEBOLT HOISTING	58
EYEBOLT MOORING	32

F

FAIRING DORSAL	13
FAIRING DORSAL	13A
FAIRING DORSAL FIN	13
FAIRING DORSAL FIN	13A
FAIRING MAIN LANDING GEAR	40
FAIRING MAIN LANDING GEAR	40A
FAIRING NOSE GEAR	18
FAIRING NOSE GEAR SPEED	34
FAIRING SPEED	34
FAIRING STABILIZER	15
FAIRING WHEEL	40
FAIRING WING	3
FASTENER REAR BAFFLE	69
FELT GREASE SEAL	41
FERRULE AXLE BOLT	34
FIBERGLASS SOUNDPROOFING	50
FILLET WING	3
FILLET WING	17
FILTER	55
FILTER	55A
FILTER	91
FILTER CARBURETOR AIR	65
FILTER CARBURETOR AIR	66
FILTER ELEMENT	91
FILTER ELEMENT KIT	90
FILTER FUEL STRAINER	88
FILTER OIL	90
FIN	13
FIN	13A
FIN	32
FIN & DORSAL	13
FIN & DORSAL	13A
FIN ATTACH FITTING	13
FIN ATTACH FITTING	13A
FIN TIP	13
FIN TIP	13A
FIN TIP	96
FIN TIP CAP	13
FIN TIP CAP	13A
FIN TIP FLASHING BEACON	13
FIN TIP FLASHING BEACON	13A
FINISH & TRIM PLACARD	2
FINISH & TRIM PLATE	17
FINISH & TRIM PLATE-HOW TO READ	SEE PAGE iii
FIRE EXTINGUISHER	58
FIREWALL	22
FIREWALL GROMMET	23
FIREWALL GROMMET SHIELD	23
FIREWALL GROMMETS	23
FIREWALL SHIELD	23
FLAP	11

NOMENCLATURE	FIGURE

F (Cont)

FLAP ACTUATOR	4
FLAP ACTUATOR MOTOR	83
FLAP BELLCRANK BRACKET	4
FLAP CABLE	83
FLAP CONTROL BRACKET	11
FLAP CONTROL BRACKET	55B
FLAP CONTROLS DETAIL	84
FLAP COWL	63
FLAP LEVER	84
FLAP MOTOR HINGE	83
FLAP PULLEY BRACKET	4
FLAP PUSH PULL ROD	11
FLAP PUSH ROD	11
FLAP RETRACT CABLE	83
FLAP SYSTEM ELECTRIC	83
FLAPS CONTROL COWL	70
FLASHER BEACON LIGHT	96
FLASHER NAVIGATION	93
FLASHING BEACON LIGHT	96
FLOORBOARD	18
FLOORBOARD	26
FLOORBOARD	30
FLOORBOARD AFT	26
FLOORBOARD CENTER	26
FORWARD AIRVENT CONTROL	72
FORWARD AIRVENT CONTROL	72A
FORWARD DOORPOST BULKHEAD	19
FORWARD FUSELAGE SPAR	19
FRAME WINDOW	43
FRAME WINDOW	44A
FRONT DOORPOST BULKHEAD	19
FRONT SEAT	52
FRONT SEAT	52A
FRONT SEAT BELT	51
FRONT SEAT BELT	52
FRONT SEAT BELT	99
FRONT SPAR	15
FRONT SPAR BLOCK	58
FRONT SPAR STRUT FITTING	6
FUEL CAP	8
FUEL DISTRIBUTOR	89
FUEL GAGE	55
FUEL GAGE	55A
FUEL HOSE	1
FUEL JET	89
FUEL LINE	87
FUEL LINES-SEE FUEL SYSTEM	
FUEL PRIMER	89
FUEL SAMPLER CUP	9
FUEL SELECTOR HANDLE	87
FUEL SELECTOR PLACARD	2
FUEL SELECTOR PLACARD	87
FUEL SELECTOR VALVE BRACKET	21
FUEL SELECTOR VALVE HANDLE	87
FUEL STRAINER	22
FUEL STRAINER	88
FUEL STRAINER BOWL	88
FUEL STRAINER BRACKET	18
FUEL STRAINER BRACKET	22
FUEL STRAINER FILTER	88
FUEL STRAINER TOP	88
FUEL SYSTEM	87
FUEL TANK	8
FUEL TANK	9
FUEL TANK ADAPTER	8
FUEL TANK DRAIN ADAPTER	8
FUEL TANK DRAIN PLUG	8
FUEL TANK DRAIN VALVE	9

ALPHABETICAL INDEX

NOMENCLATURE	FIGURE
F (Cont)	
FUEL TANK STRAINER	8
FUEL TANK VENT LINE	87
FUEL TRANSMITTER GASKET	8
FUSE	93
FUSE HOLDER	93
FUSEHOLDER	93
FUSELAGE	17
FUSELAGE	26
FUSELAGE EQUIPMENT	58
FUSELAGE FRONT SECTION STRUCTURE	18
FUSELAGE SOUNDPROOFING	50
FUSELAGE TAILCONE	30
G	
GAGE-SEE INDIVIDUAL LISTING	
GAS CAP-SEE FUEL CAP	
GAS GAGE-SEE INSTRUMENT PANEL	
GAS LINES-SEE FUEL SYSTEM	
GASKET ADHESIVE	1
GASKET FUEL TRANSMITTER	8
GASKET OIL COOLER	65
GASKET OIL COOLER	66
GEAR MAIN LANDING	40
GEAR SELECTOR VALVE	87
GLARE SHIELD	55
GLARESHIELD	55A
GLARESHIELD LIGHT	94
GLASS WINDOW	43
GLASS WINDOW	44A
GOVERNOR BASE	67
GOVERNOR BODY	67
GOVERNOR COVER	67
GOVERNOR PROPELLER	65
GOVERNOR PROPELLER	67
GREASE SEAL FELT	37
GREASE SEAL FELT	38
GREASE SEAL FELT	41
GREASE SEAL FELT	42
GRILL SPEAKER	95
GROMMET ASBESTOS	23
GROMMET FIREWALL	23
GROMMETS FIREWALL	23
GROUND STRAP	8
GROUND STRAP	93
GYRO DIRECTIONAL	55
GYRO DIRECTIONAL	55A
GYRO DIRECTIONAL	91
GYRO HORIZON	55
GYRO HORIZON	55A
GYRO HORIZON	91
H	
HANDLE ASSIST	48
HANDLE FUEL SELECTOR	87
HANDLE FUEL SELECTOR VALVE	87
HANDLE INSIDE DOOR	43
HANDLE INSIDE DOOR	44
HANDLE INSIDE DOOR	44A
HANDLE LIFT	58
HANDLE PARKING BRAKE	74
HANDLE SEAT	52
HANDLE SEAT	52A

NOMENCLATURE	FIGURE
H (Cont)	
HANDLE SEAT ADJUST	51
HANDLE SEAT ADJUST	52
HANDLE SEAT ADJUST	52A
HANDLE WINDOW	43
HANDLE WINDOW	44A
HARNESS IGNITION	66
HARNESS SHOULDER	99
HEADLINER	47
HEADLINER RETAINER	29
HEADREST	51
HEADREST	52
HEADREST	52A
HEADREST	53
HEATER DUCT	18
HEATER DUCT	22
HEATER HOSE	65
HEATER PITOT	86
HEATING & DEFROSTING SYSTEM CABIN	73
HEATING CABIN	73
HEATING PLUG	55
HEATING PLUG	55A
HINGE AILERON	10
HINGE BRACKET	13
HINGE BRACKET	13A
HINGE BRACKET	15
HINGE BRACKET	24
HINGE BRACKET	46
HINGE BRACKET	63
HINGE DOOR STOP	43
HINGE DOOR STOP	44
HINGE DOOR STOP	44A
HINGE FLAP MOTOR	83
HINGE HALF ELEVATOR	16
HINGE HALF TRIM TAB	16
HINGE STABILIZER ATTACH	15
HINGE WINDOW	43
HINGE WINDOW	44A
HOISTING EYEBOLT	58
HOLDER FUSE	93
HOOK GLIDER TOW	58
HOOK STRIP	19
HORIZON GYRO	55
HORIZON GYRO	55A
HORIZON GYRO	91
HORIZONTAL BAFFLE	69
HORN STALL WARNING	57
HORN STALL WARNING	93
HOSE BRAKE	74
HOSE CARBURETOR HEAT	65
HOSE FUEL	1
HOSE HEATER	65
HOSE OIL PRESSURE	65
HOSE OIL PRESSURE	90
HOSES-SEE APPLICABLE SYSTEM	
HOURMETER GAGE	55
HOURMETER GAGE	55A
HOW TO ORDER PAINTED PARTS SEE PAGE	vii
HOW TO ORDER PARTS-SEE INTRODUCTION	i
HOW TO ORDER UPHOLSTERED PARTS-SEE PAGE	vi
HOW TO READ FINISH & TRIM PLATE-SEE PAGE	iii
HOW TO USE PARTS CATALOG-SEE PAGE	
HUB ALIGNMENT DOWEL	62
HUB CAP	34
HUB CAP	40
HUB CAP	40A
HUB CAP NOSE GEAR	34

ALPHABETICAL INDEX

NOMENCLATURE	FIGURE

I

IDLER SPROCKET	79
IGNITION HARNESS	66
IGNITION SWITCH KIT	55
IGNITION SWITCH KIT	55A
INDICATOR-SEE INSTRUMENT PANEL	
INERTIA REEL	101
INLET AIR VENT	18
INLET AIR VENT	72
INLET AIR VENT	72A
INSIDE DOOR HANDLE	43
INSIDE DOOR HANDLE	44
INSIDE DOOR HANDLE	44A
INSTRUMENT CLUSTER	55
INSTRUMENT CLUSTER	55A
INSTRUMENT PANEL	55B
INSTRUMENT PANEL	94
INSTRUMENT PANEL COVER	55
INSTRUMENT PANEL COVER	55A
INSTRUMENT PANEL EQUIPMENT	55
INSTRUMENT PANEL EQUIPMENT	55A
INSTRUMENT PANEL LIGHT	95
INSTRUMENT PANEL STATIONARY	55B
INSTRUMENT PANEL STRUCTURE STATIONARY	55B
INSTRUMENT-SEE INDIVIDUAL LISTINGS	

J

JACK-HEADSET-SEE CESSNA ELECTRONICS MANUAL	
JACK-MICROPHONE-SEE CESSNA ELECTRONICS MANUAL	
JAMB DOOR	19
JAMB DOOR	46

K

KIT IGNITION SWITCH	55
KIT IGNITION SWITCH	55A
KIT SEAT ROLLER	51
KITS-SEE ACCESSORY KIT CATALOG	
KNOB LIGHTER	55
KNOB LIGHTER	55A
KNOB OXYGEN CONTROL	92
KNOB OXYGEN CONTROL	92A
KNOB PRIMER	55
KNOB PRIMER	55A
KNOB SILENCER	72
KNOBS-SEE INDIVIDUAL APPLICATIONS	

L

LAMPS-SEE BULBS	
LAMPS-SEE LIGHTS	
LANDING GEAR BULKHEAD	27
LANDING GEAR MAIN	40
LANDING GEAR MAIN	40A
LANDING LIGHT	63
LARGE OIL COOLER	65
LATCH	31
LATCH	34
LATCH	40A
LATCH	46
LATCH	54
LATCH	58

NOMENCLATURE	FIGURE

L (Cont)

LATCH	63
LATCH CABIN DOOR	45
LATCH CARGO TIE DOWN	58
LEADING EDGE SKIN	5
LEADING EDGE SKIN	13
LEADING EDGE WING	5
LENS CLEAR	33
LENS DOME LIGHT	93
LENS WING NAVIGATION LIGHT	3
LEVER COWL FLAP	79
LEVER FLAP	84
LEVER SPEED ADJUSTMENT	67
LIFT HANDLE	58
LIGHT COURTESY	97
LIGHT FLASHING BEACON	96
LIGHT GLARESHIELD	94
LIGHT LANDING	63
LIGHT POST	56
LIGHT TAIL	33
LIGHTED INSTRUMENT PANEL POST	56
LIGHTER CIGAR	55
LIGHTER CIGAR	55A
LIGHTER KNOB	55
LIGHTER KNOB	55A
LIMIT SWITCHES-SEE SWITCHES	
LINES-SEE INDIVIDUAL SYSTEM	
LINING BRAKE	42
LINK TORQUE LOWER	36
LINK TORQUE UPPER	36
LOCK BAGGAGE DOOR	46
LOCK CONTROL	58
LOCK DOOR	43
LOWER CABIN SECTION	26
LOWER COWL	63
LUBRICATOR FITTING	36

M

MAGAZINE POCKET	51
MAGAZINE POCKET	52
MAGAZINE POCKET	52A
MAGNETO	66
MAGNETO DRIVE GEAR	66
MAIN GEAR FITTING	40
MAIN GEAR WHEEL	41
MAIN GEAR WHEEL	42
MAIN LANDING GEAR	40A
MAIN LANDING GEAR AXLE	40
MAIN LANDING GEAR AXLE	40A
MAIN LANDING GEAR FAIRING	40
MAIN LANDING GEAR FAIRING	40A
MANIFOLD PRESSURE GAGE	55
MANIFOLD PRESSURE GAGE	55A
MANIFOLD PRESSURE LINE	55
MANIFOLD PRESSURE LINE	64
MAP COMPARTMENT	57
MAP COMPARTMENT DOOR	57
MAP LIGHT RHEOSTAT	78
MAP LIGHT SOCKET	78
MAP LIGHT SOCKET	78A
MAP LIGHT SWITCH	55
MAP LIGHT SWITCH	55A
MARKER BEACON PLACARD	2
MASTER SWITCH	55
MASTER SWITCH	55A
MASTER SWITCH DIODE	55

ALPHABETICAL INDEX

NOMENCLATURE	FIGURE
M (Cont)	
MASTER SWITCH DIODE	55A
MASTER SWITCH DIODE	93
METERING PIN	36
METERING PIN BASE	36
MIKE SWITCH	78
MIKE SWITCH	78A
MIRROR & COVER	60
MIXTURE CONTROL	55
MIXTURE CONTROL	55A
MIXTURE CONTROL	64
MOORING EYEBOLT	32
MOORING RING	12
MOTOR FLAP ACTUATOR	83
MOUNT ENGINE	65
MOUNT ENGINE SHOCK	65
MOUNT SHOCK	55B
MOUNT SHOCK	63
MUFFLER	68
MUFFLER EXHAUST	68A
N	
NAMEPLATE	2
NAMEPLATE	17
NAMEPLATE	67
NAMEPLATE CESSNA	2
NAMEPLATES	2
NAMEPLATES & EXTERIOR MARKINGS	2
NAVIGATION FLASHER	93
NAVOMATIC AUTO PILOT-SEE ELECTRONICS MANUAL	
NOSE CAP LOWER	63
NOSE CAP UPPER	63
NOSE FITTING PITOT TUBE	86
NOSE GEAR	34
NOSE GEAR FAIRING	18
NOSE GEAR FITTING	18
NOSE GEAR LOWER FITTING	18
NOSE GEAR SHOCK STRUT PLACARD	2
NOSE GEAR UPPER FITTING	18
NOSE GEAR WHEEL	37
NOSE GEAR WHEEL	38
NOZZLE DEFROST	73
NUMERICAL INDEX-SEE LAST SECTION IN CATALOG	
O	
OIL COOLER	66
OIL COOLER BAFFLE	69
OIL COOLER GASKET	65
OIL COOLER GASKET	66
OIL COOLER LARGE	65
OIL COOLER LARGE	66
OIL COOLER PLATE	65
OIL COOLER PLATE	66
OIL DOOR	63
OIL FILTER	90
OIL FILTER ADAPTER	90
OIL FILTER PLACARD	2
OIL FILTER PLACARD	90
OIL PRESSURE GAGE	55
OIL PRESSURE GAGE	55A
OIL PRESSURE GAGE	90
OIL PRESSURE HOSE	65
OIL PRESSURE HOSE	90

NOMENCLATURE	FIGURE
O (Cont)	
OIL PRESSURE LINE	65
OIL PRESSURE LINE	90
OIL PRESSURE SWITCH	65
OIL QUICK DRAIN VALVE	65
OIL SYSTEM	90
OIL TEMP GAGE	55
OIL TEMP GAGE	55A
OIL TEMPERATURE ADAPTER	64
OIL TEMPERATURE GAGE	90
OPERATIONAL LIMITATIONS PLACARD	2
ORIFICE PISTON SUPPORT	36
OUTBOARD AUXILIARY SPAR	6
OUTLET CABIN VENTILATION	72
OUTLET OXYGEN VALVE	92
OUTLET OXYGEN VALVE	92A
OUTSIDE AIR TEMPERATURE GAGE	58
OUTSIDE AIR TEMPERATURE GAGE	72A
OUTSIDE AIR VENT	72
OUTSIDE AIR VENT	72A
OUTSIDE AIR VENT FWD	72A
OVERVOLTAGE SENSOR	93
OXYGEN CONTROL KNOB	92
OXYGEN CONTROL KNOB	92A
OXYGEN MASK CASE	92
OXYGEN MASK CASE	92A
OXYGEN PRESSURE GAGE	92
OXYGEN PRESSURE GAGE	92A
OXYGEN REGULATOR	92
OXYGEN REGULATOR	92A
OXYGEN SYSTEM	92
OXYGEN SYSTEM	92A
P	
PAD CONTROL WHEEL	78
PAINT-SEE FINISH & TRIM PLATE	SEE PAGE iii
PAINTED PARTS-HOW TO ORDER	SEE PAGE vii
PANEL BAGGAGE DOOR	49
PANEL EQUIPMENT INSTRUMENT	55
PANEL EQUIPMENT INSTRUMENT	55A
PANEL INSTRUMENT	55B
PANEL INSTRUMENT	94
PANEL LIGHT BRACKET	95
PANEL LIGHT HOUSING	95
PANEL LIGHT INSTRUMENT	95
PANEL REMOVABLE	55B
PANEL SHOCK MOUNTED	55B
PANEL SOUNDPROOFING	50
PANEL STATIONARY	18
PANEL SWITCH	55B
PANEL TRIM	48
PANEL TRIM	49
PANEL WING	7
PARKING BRAKE	74
PARKING BRAKE BRACKET	74
PARKING BRAKE HANDLE	74
PARKING BRAKE SUPPORT	74
PAWL SEAT BACK	51
PEDAL BRAKE	75
PEDAL BRAKE & RUDDER	75
PEDESTAL	52
PEDESTAL	52A
PILOT & CO PILOT SEAT	51
PILOT CHECK LIST	2
PILOT SEAT	51
PIN METERING	36

ALPHABETICAL INDEX

NOMENCLATURE	FIGURE
P (Cont)	
PIPE EXHAUST	68
PISTON MASTER CYLINDER	76
PISTON SUPPORT ORIFICE	36
PITOT HEATER	86
PITOT HEATER SWITCH	86
PITOT SYSTEM	86
PITOT TUBE	86
PITOT TUBE CONNECTOR	5
PITOT TUBE CONNECTOR	86
PLACARDS SEE FIG 2	
PLATE BAGGAGE DOOR SCUFF	49
PLATE DOOR SCUFF	49
PLATE FINISH & TRIM	17
PLATE OIL COOLER	65
PLATE OIL COOLER	66
PLATE PRESSURE	41
PLATE PRESSURE	42
PLATE SCUFF	49
PLATE STRIKER	46
PLATE STRIKER	48
PLUG BUTTON ANTI FRICTION	11
PLUG FUEL TANK DRAIN	8
PLUG HEATING	55
PLUG HEATING	55A
PLUG VOLTAGE REGULATOR	93
PLUGS SPARK	66
POCKET MAGAZINE	51
POCKET MAGAZINE	52
POCKET MAGAZINE	52A
PORTABLE STRETCHER	59
POST LIGHT	56
POST LIGHTED INSTRUMENT PANEL	56
POWER SUPPLY ELECTROLUMINESCENT	93
POWER SUPPLY ELECTROLUMINESCENT PANEL	93
POWER SUPPLY STROBE LIGHT	93
PRESSURE PLATE	41
PRESSURE PLATE	42
PRIMER	1
PRIMER ENGINE	55
PRIMER ENGINE	55A
PRIMER FUEL	89
PRIMER KNOB	55
PRIMER KNOB	55A
PRIMER LINE	64
PRIMER LINE	87
PRIMER ZINC CHROMATE	1
PROBE CARBURETOR AIR	65
PROBE CARBURETOR AIR TEMP	65
PROBE ECONOMY POWER	64
PROPELLER	61
PROPELLER	62
PROPELLER CONTROL	55
PROPELLER CONTROL	55A
PROPELLER CONTROL	64
PROPELLER GOVERNOR	65
PROPELLER GOVERNOR	67
PULLEY ELEVATOR	82
PULLEYS-SEE APPLICABLE SYSTEM	
PUMP VACUUM	91
Q	
QUADRANT	77
R	
RADIO COVER	55A
RADIO CUTOUT COVER	55
RADIOS-SEE CESSNA ELECTRONICS MANUAL	
RAIL SEAT	26
REAR DOORPOST BULKHEAD	25
REAR DOORPOST CHANNEL	25
REAR SEAT	53
REAR SEAT BACK	53
REAR SEAT BOTTOM	53
REAR SEAT VENTS	72
REAR SEAT VENTS	72A
REAR SPAR	6
REAR SPAR	14
REAR SPAR	15
REAR SPAR	25
REAR SPAR BLOCK	58
REAR VIEW MIRROR	60
REAR WINDOW	29
REAR WINDOW RETAINER	24
RECEIVER ASH	49
RECEPTACLE EXTERNAL POWER	93
RECLINING ADJUSTMENT HANDLE	51
REEL INERTIA	101
REFLECTOR	94
REFLECTOR	100
REGULATOR OXYGEN	92
REGULATOR OXYGEN	92A
REGULATOR VOLTAGE	66
REGULATOR VOLTAGE	93
RELAY SPLIT BUS BAR	93
REMOVABLE PANEL	55B
RESISTOR	55
RESISTOR	55A
RESISTOR	93
RESISTOR	96
RETAINER HEADLINER	29
RETAINER REAR WINDOW	24
RETAINER SEAT BOTTOM	51
RETAINER WINDOW	24
RETAINER WINDOW	44
RETAINER WINDOW MOULDING	44
RETAINER WINDSHIELD	28
RHEOSTAT	78A
RHEOSTAT MAP LIGHT	78
RIBS-SEE APPLICABLE STRUCTURE	
RIGHT CABIN DOOR	44A
RING MOORING	12
RIVET SET KIT	42
ROD AILERON PUSH PULL	10
ROD END THROTTLE CONTROL	64
ROD FLAP PUSH	11
ROD FLAP PUSH PULL	11
ROD SHIMMY DAMPENER	39
RUDDER	14
RUDDER BALANCE WEIGHT	14
RUDDER BAR CARPET	49
RUDDER BAR SHIELD	49
RUDDER BELLCRANK	14
RUDDER CONTROL SYSTEM	85
RUDDER RIB	14
RUDDER TIP CAP	14
RUDDER TRIM INDICATOR	79
RUDDER TRIM WHEEL	79

ALPHABETICAL INDEX

NOMENCLATURE	FIGURE
S	
SAFETY BELT	54
SAFETY BELT-ALSO SEE SEAT BELTS	
SCOOP AIR	5
SCOOP AIR	72
SCOOP AIR	72A
SCOOP CABIN AIR VENT	5
SCRAPER WHEEL FAIRING	40
SCRAPER WHEEL FAIRING	40A
SCUFF PLATE	49
SCUFF PLATE BAGGAGE DOOR	49
SCUFF PLATE DOOR	49
SEAL BAGGAGE DOOR	50
SEAL FELT GREASE	37
SEAL FELT GREASE	38
SEAL FELT GREASE	42
SEAL WINDOW	29
SEALANT	1
SEAT AUXILIARY	54
SEAT BACK CAM	51
SEAT BACK CAM	53
SEAT BACK COVERS-SEE APPLICABLE SEAT	
SEAT BACK CUSHION-SEE APPLICABLE SEAT	
SEAT BACK PAWL	51
SEAT BACK-SEE INDIVIDUAL SEAT	
SEAT BELT	53
SEAT BELT	54
SEAT BELT	99
SEAT BELT FITTING	17
SEAT BELT FITTING	51
SEAT BELT FITTING	52
SEAT BELT FITTING	99
SEAT BOTTOM-SEE INDIVIDUAL SEAT	
SEAT FRONT	52
SEAT FRONT	52A
SEAT PILOT	51
SEAT PILOT & CO PILOT	51
SEAT RAIL	26
SEAT REAR	53
SEAT ROLLER KIT	51
SEAT STOP	51
SEAT STOP	52
SEAT STOP	52A
SEAT STOP-SEE INDIVIDUAL SEAT INSTALLATION	
SELECTOR VALVE FUEL	87
SELECTOR VALVE GEAR	87
SENDING UNIT CYLINDER HEAD TEMP	55
SENDING UNIT CYLINDER HEAD TEMP	55A
SENDING UNIT CYLINDER HEAD TEMP	65
SENSOR OVERVOLTAGE	93
SET KIT RIVET	42
SHAFT TACHOMETER	55
SHAFT TACHOMETER	55A
SHELF REMOVABLE BAGGAGE	47
SHIELD CABLE	19
SHIELD CABLE	47
SHIELD FIREWALL	23
SHIELD FIREWALL GROMMET	23
SHIELD GLARE	55
SHIMMY DAMPENER	39
SHOCK MOUNT	55B
SHOCK MOUNT	63
SHOCK MOUNT ENGINE	65
SHOCK MOUNTED ALTERNATOR	98
SHOCK MOUNTED PANEL	55B
SHOCK STRUT LOWER	36
SHOCK STRUT NOSE GEAR	36
SHOULDER HARNESS	99
SHROUD	65

NOMENCLATURE	FIGURE
S (Cont)	
SHROUD EXHAUST MUFFLER	68
SHROUD EXHAUST MUFFLER	68A
SILENCER AIR VENT	72
SILENCER ESCUTCHEON	72
SILENCER KNOB	72
SILL DOOR	26
SILL DOOR	46
SILL DOOR	47
SILL LOWER BAGGAGE DOOR	26
SKINS & STRINGERS	7
SKINS & STRINGERS WING	7
SKINS-SEE APPLICABLE STRUCTURE	
SKYLIGHT WINDOW	47
SOCKET MAP LIGHT	78
SOCKET MAP LIGHT	78A
SOUND DEADENER	1
SOUNDPROOFING	47
SOUNDPROOFING	50
SOUNDPROOFING BAG	50
SOUNDPROOFING FIBERGLASS	50
SOUNDPROOFING FUSELAGE	50
SOUNDPROOFING PANEL	50
SPACER AXLE	34
SPAR FRONT	15
SPAR OUTBOARD AUXILIARY	6
SPAR REAR	6
SPAR REAR	14
SPAR REAR	15
SPAR REAR	25
SPAR WING FRONT	6
SPAR WING REAR	6
SPARK PLUGS	66
SPEAKER GRILL	95
SPEAKER-RADIO-SEE CESSNA ELECTRONICS MANUAL	
SPEED FAIRING	34
SPEED FAIRING NOSE GEAR	34
SPINNER DOME	61
SPINNER SUPPORT	61
SPLIT BUS BAR RELAY	93
SPROCKET IDLER	79
SPROCKET RUDDER TRIM	79
STABILIZER	15
STABILIZER FAIRING	15
STABILIZER FITTING	15
STABILIZER TIP	15
STABILIZER TRIM INDICATOR	79
STACK CENTER	68A
STACK EXHAUST	68
STACK EXHAUST	68A
STAINLESS STEEL CABLES-SEE SPECIFIC SYSTEM	
STALL WARNING HORN	57
STALL WARNING HORN	93
STARTER	66
STARTER CONTACTOR	93
STATIC DISCHARGER	3
STATIC DISCHARGER	10
STATIC DISCHARGER	16
STATIC SOURCE ALTERNATE	86
STATIC SOURCE SUMP	86
STATIONARY INSTRUMENT PANEL	55B
STATIONARY INSTRUMENT PANEL STRUCTURE	55B
STATIONARY PANEL	18
STEERING BOOT	18
STEERING SYSTEM NOSE GEAR	35
STEP	40
STEP	40A
STEP TREAD	40
STEP TREAD	40A

ALPHABETICAL INDEX

NOMENCLATURE	FIGURE

S (Cont)

STICK OIL DIP	65
STINGER	33
STOP CABIN DOOR	43
STOP CABIN DOOR	44
STOP CABIN DOOR	44A
STOP DOOR	55B
STOP SEAT	51
STOP SEAT	52
STOP SEAT	52A
STRAINER DRAIN CONTROL	88
STRAINER FUEL	22
STRAINER FUEL	88
STRAINER FUEL TANK	8
STRAP BATTERY GROUND	93
STRAP BONDING	65
STRAP ENGINE MOUNT BONDING	65
STRAP GROUND	8
STRAP GROUND	93
STRETCHER PORTABLE	59
STRIKER PLATE	46
STRIKER PLATE	48
STRIP HOOK	19
STRUT	12
STRUT LOWER SHOCK	36
STRUT NOSE GEAR SHOCK	36
STRUT WING	12
SUCTION GAGE	55
SUCTION GAGE	55A
SUCTION GAGE	91
SUMP STATIC SOURCE	86
SUN VISOR	58
SWITCH CONSOLE LIGHTS	55
SWITCH CONSOLE LIGHTS	55A
SWITCH COVER	55
SWITCH COVER	55A
SWITCH DOME LIGHT	93
SWITCH MAP LIGHT	55
SWITCH MAP LIGHT	55A
SWITCH MASTER	55
SWITCH MASTER	55A
SWITCH MIKE	78
SWITCH MIKE	78A
SWITCH OIL PRESSURE	65
SWITCH PANEL	55B
SWITCH PITOT HEATER	86
SWITCH UTILITY	93
SWITCHES-SEE INSTRUMENT PANEL	
SYSTEMS-SEE INDIVIDUAL LISTINGS	

T

TAB ELEVATOR TRIM	16
TACHOMETER	55
TACHOMETER	55A
TACHOMETER SHAFT	55
TACHOMETER SHAFT	55A
TAIL LIGHT	33
TAILCONE FUSELAGE	30
TAILCONE FUSELAGE AFT	32
TANK DRAIN VALVE FUEL	9
TANK FUEL	8
TANK FUEL	9
THROTTLE CONTROL	55
THROTTLE CONTROL	55A

T (Cont)

THROTTLE CONTROL	64
TIARA	47
TIARA MOUNTING BRACKET	24
TIE DOWN CARGO	58
TINTED WINDSHIELD	28
TIP ELEVATOR	16
TIP FIN	13
TIP FIN	13A
TIP FIN	96
TIP FLASHING BEACON FIN	13
TIP FLASHING BEACON FIN	13A
TIP STABILIZER	15
TIRE	37
TIRE	38
TIRE	41
TIRE	42
TIRE PRESSURE PLACARD	2
TOP & FIREWALL UPHOLSTERY CABIN	47
TOP CABIN	24
TOP CABIN	47
TOP FORWARD CABIN	24
TOP FUEL STRAINER	88
TOP SKYLIGHT CABIN	24
TORQUE ARM NOSE GEAR STEERING	34
TORQUE LOWER LINK	36
TORQUE UPPER LINK	36
TOW BAR	58
TOW HOOK GLIDER	58
TRANSMITTER	8
TRANSMITTER & FLOAT FUEL	8
TREAD STEP	40
TREAD STEP	40A
TRIM CONTROL ELEVATOR	82
TRIM CONTROL SYSTEM ELEVATOR	82
TRIM TAB ACTUATOR ELEVATOR	82B
TRIM TAB ELEVATOR	16
TRIM TAB ELEVATOR	82B
TRIM TAB HORN	16
TRUE AIRSPEED INDICATOR	55
TRUE AIRSPEED INDICATOR	55A
TUBE AILERON CONTROL	77
TUBE AIR DUCT DRAIN	72
TUBE CONTROL	53
TUBE CONTROL	77
TUBE PITOT	86
TUBE POLYETHYLENE	1
TUBE POLYETHYLENE	86
TUBE SHOCK STRUT	36
TUBE VENT	8
TUNNEL CARPET	49
TUNNEL COMPONENTS FRONT SECTION	21
TURN & BANK INDICATOR	55
TURN & BANK INDICATOR	55A
TURN COORDINATOR INDICATOR	55
TURN COORDINATOR INDICATOR	55A

U

UPHOLSTERY CABIN	49
UPHOLSTERY CABIN SIDE & FLOORBOARD	49
UPPER COWL	63
UPPER SILL	24
UTILITY SWITCH	93

ALPHABETICAL INDEX

NOMENCLATURE	FIGURE

V

VACUUM PUMP	91
VACUUM RELIEF VALVE	91
VACUUM SYSTEM	91
VALVE DEFROST	73
VALVE DRAIN	9
VALVE EXTENSION	34
VALVE EXTENSION	40
VALVE EXTENSION	40A
VALVE FUEL SELECTOR	87
VALVE OIL QUICK DRAIN	65
VALVE OUTLET OXYGEN	92
VALVE OUTLET OXYGEN	92A
VALVE VACUUM RELIEF	91
VALVE VENT	8
VALVE WARM AIR	73
VENT LINE	8
VENT TUBE	8
VENT VALVE	8
VENTILATION SYSTEM CABIN	72
VENTILATION SYSTEM CABIN	72A
VERTICAL SPEED INDICATOR	55
VERTICAL SPEED INDICATOR	55A
VHF ANTENNA	13A
VIEW MIRROR REAR	60
VISOR SUN	58
VOLTAGE REGULATOR	66
VOLTAGE REGULATOR	93
VOLTAGE REGULATOR PLUG	93

W

WARM AIR VALVE	73
WEDGE CABIN DOOR	17
WEIGHT AILERON BALANCE	10
WEIGHT ELEVATOR BALANCE	16
WEIGHT RUDDER BALANCE	14
WHEEL & BRAKE	41
WHEEL & BRAKE	42
WHEEL & BRAKE MAIN LANDING GEAR	41
WHEEL & BRAKE MAIN LANDING GEAR	42
WHEEL & SWITCHES CONTROL	78
WHEEL & SWITCHES CONTROL	78A
WHEEL CONTROL	78
WHEEL CONTROL	78A
WHEEL ELEVATOR TRIM	79
WHEEL FAIRING	40
WHEEL FAIRING SCRAPER	40
WHEEL FAIRING SCRAPER	40A
WHEEL MAIN GEAR	41
WHEEL MAIN GEAR	42
WHEEL NOSE GEAR	37
WHEEL NOSE GEAR	38
WHEEL RUDDER TRIM	79
WINDOW	24
WINDOW	29
WINDOW	43
WINDOW	44A
WINDOW DOOR	44
WINDOW DOOR	48
WINDOW FRAME	43
WINDOW FRAME	44A
WINDOW GLASS	43
WINDOW GLASS	44A
WINDOW HANDLE	43
WINDOW HANDLE	44A
WINDOW HINGE	43

NOMENCLATURE	FIGURE

W (Cont)

WINDOW HINGE	44A
WINDOW REAR	29
WINDOW SEAL	29
WINDOW SKYLIGHT	47
WINDSHIELD	28
WINDSHIELD RETAINER	28
WINDSHIELD TINTED	28
WING	3
WING COMPLETE	3
WING FAIRING	3
WING FILLET	3
WING FILLET	17
WING FRONT SPAR	6
WING NAVIGATION LIGHT BULB	3
WING NAVIGATION LIGHT LENS	3
WING PANEL	7
WING REAR SPAR	6
WING ROOT RIB	4
WING SPAR FITTING	6
WING STRINGER	7
WING STRUT	12
WING STRUT FITTING	12
WING UNIT STALL WARNING	3
WINTERIZATION EQUIPMENT	71
WINTERIZATION PLACARD	2
WRENCH ADAPTER OIL FILTER	90

Z

ZINC CHROMATE PRIMER	1

PARTS LISTING

FIGURE AND INDEX NO.	PART NUMBER	1 2 3 4 5 6 7 DESCRIPTION		UNITS PER ASSY	USABLE ON CODE
1 - 1	C1-C2	CONLEY-WELD	CEMENTING ----------		
	C1-C2	CONLEY-WELD EPOXY BASE ADHESIVE.	CEMENTING ---------- PLASTIC TO PLASTIC PLASTIC TO METAL FIBERGLASS TO FIBERGLASS FIBERGLASS TO METAL METAL TO METAL		
- 2	EC880	ADHESIVE-SYNTHETIC RUBBER BASE OIL RESISTANT	CEMENTING ---------- RUBBER TO METAL SOUNDPROOFING TO METAL UPHOLSTERY TO METAL		
- 3	1024A-B	CEMENT PARTS A & B	CEMENTING DE-ICER ---------- AND ABRASION BOOTS TO WING AND STAB ILIZER LEADING EDGES.		
- 4	1007	PRIMER	USED ONLY FOR PRIMING -------- AREAS WHERE DE-ICER AND ABRASION BOOTS ARE TO BE INSTALLED WITH 1024A-B.		
- 5	576.1	SEALANT-EXTRUDED PERMAGUM	WEATHER SEALING ---------- OF CABIN		
- 6	579.6	SEALANT-EXTRUDED ZINC CHROMATE	WEATHER SEALING ---------- OF WINDSHIELD		
- 7	S1078-1	SEALANT-SYNTHETIC RUBBER-FABRIC REINFORCED .06 THICK .50 WIDE	WINDSHIELD SEALING ----------		
- 8	S1078-2	SEALANT-SYNTHETIC RUBBER-FABRIC REINFORCED .12 THICK .50 WIDE	WINDSHIELD SEALING ----------		
- 9	S1078-3	SEALANT-SYNTHETIC RUBBER-FABRIC REINFORCED 2 MIL MYLAR TAPE BACKING. .06 THICK 1.50 WIDE	WINDSHIELD SEALING ----------		
-10	EC1239A-B	SEALANT-CATALYTIC	GENERAL PURPOSE ---------- FOR FAYING SURFACES FILLET & RIVET SEALS FUEL SEALING AND AREAS WHERE SKYDROL IS PRESENT		
-11	700	SEALANT-FIREWALL	SEALING FIREWALL JOINTS ------ AND OPENINGS. WITHSTANDS 2000 DEGREE TEMP FOR 5 MINUTES.		
-12	EC776	ADHESIVE-GASKET FUEL RESISTANT SYNTHETIC RUBBER BASE.	CEMENTING GASKETS ----------		
-13	550	SOUND DEADENER- LIQUID VIBRATION DAMPENER	VIBRATION DAMPENING ---------- CAN BE BRUSHED OR SPRAYED.		
-14	MIL-P-8585	PRIMER-ZINC CHROMATE- GREEN	CORROSION PROOFING ----------		

CONTINUED ON NEXT PAGE

FIGURE AND INDEX NO.	PART NUMBER	DESCRIPTION 1 2 3 4 5 6 7	UNITS PER ASSY	USABLE ON CODE
1 -14A	EC1675A-B	SEALANT-CATALYTIC HOPPER ADAPTER TO ---------- HOPPER CANTILEVER WING FUEL BAY	1	
-14B	PR0890	SEALANT-CATALYTIC HOPPER ADAPTER TO ---------- ALTERNATE FOR HOPPER CANTILEVER EC1675A-B WING FUEL BAY	1	
-15	S51-4	HOSE-FUEL & OIL-1/4 ID AVAILABLE BY THE FOOT ----------	AR	
	S51-6	HOSE-FUEL & OIL-3/8 ID AVAILABLE BY THE FOOT ----------	AR	
	S51-8	HOSE-FUEL & OIL-1/2 ID AVAILABLE BY THE FOOT ----------	AR	
	S51-10	HOSE-FUEL & OIL-5/8 ID AVAILABLE BY THE FOOT ----------	AR	
	S51-12	HOSE-FUEL & OIL-3/4 ID AVAILABLE BY THE FOOT ----------	AR	
	S51-16	HOSE-FUEL & OIL-1.00 ID AVAILABLE BY THE FOOT ----------	AR	
	S51-32	HOSE-FUEL & OIL-2.00 ID AVAILABLE BY THE FOOT ----------	AR	
-16	S202RB	CHANNEL-EXTRUDED BLACK AVAILABLE BY THE FOOT --------	AR	
	S202VW	CHANNEL-EXTRUDED WHITE AVAILABLE BY THE FOOT --------	AR	
-17	S292-1	INSULATION SLEEVING-ELEC-.118 ID AVAILABLE BY THE FOOT --	AR	
	S292-2	INSULATION SLEEVING-ELEC-.133 ID AVAILABLE BY THE FOOT --	AR	
	S292-3	INSULATION SLEEVING-ELEC-.148 ID AVAILABLE BY THE FOOT --	AR	
	S292-4	INSULATION SLEEVING-ELEC-.166 ID AVAILABLE BY THE FOOT --	AR	
	S292-5	INSULATION SLEEVING-ELEC-.186 ID AVAILABLE BY THE FOOT --	AR	
	S292-6	INSULATION SLEEVING-ELEC-.208 ID AVAILABLE BY THE FOOT --	AR	
	S292-8	INSULATION SLEEVING-ELEC-.263 ID AVAILABLE BY THE FOOT --	AR	
	S292-11	INSULATION SLEEVING-ELEC-5/16 ID AVAILABLE BY THE FOOT --	AR	
	S292-12	INSULATION SLEEVING-ELEC-3/8 ID AVAILABLE BY THE FOOT ---	AR	
	S292-14	INSULATION SLEEVING-ELEC-1/2 ID AVAILABLE BY THE FOOT ---	AR	
	S292-16	INSULATION SLEEVING-ELEC-3/4 ID AVAILABLE BY THE FOOT ---	AR	
	S292-28	INSULATION SLEEVING-ELEC-2-1/2 ID AVAILABLE BY THE FOOT -	AR	
-18	S10268G	CLAMP-WRAP TYPE AVAILABLE IN 100 FOOT ROLL ----------	AR	
-19	S1053E7T	DUCT-FLEXIBLE-NEOPRENE IMPREGNATED 7/8 DIA ---------- AVAILABLE IN 10 FOOT LENGTHS ONLY	AR	
	S1053E8T	DUCT-FLEXIBLE-NEOPRENE IMPREGNATED 1.00 DIA ---------- AVAILABLE IN 10 FOOT LENGTHS ONLY	AR	
	S1053E10T	DUCT-FLEXIBLE-NEOPRENE IMPREGNATED 1-1/4 DIA ----------	AR	
	S1053K10T	DUCT-FLEXIBLE-SILICONE IMPREGNATED 1-1/4 DIA ---------- AVAILABLE IN 10 FOOT LENGTHS ONLY	AR	
	S1053E12T	DUCT-FLEXIBLE-NEOPRENE IMPREGNATED 1-1 1/2 DIA ----------	AR	
	S1053K12T	DUCT-FLEXIBLE-SILICONE IMPREGNATED 1-1/2 DIA ---------- AVAILABLE IN 10 FOOT LENGTHS ONLY	AR	
	S1053E20T	DUCT-FLEXIBLE-NEOPRENE IMPREGNATED 2-1/2 DIA ----------	AR	
	S1053K20T	DUCT-FLEXIBLE-SILICONE IMPREGNATED 2-1/2 DIA ---------- AVAILABLE IN 10 FOOT LENGTHS ONLY	AR	
	S1053E24T	DUCT-FLEXIBLE-NEOPRENE IMPREGNATED 3.00 DIA ----------	AR	
	S1053K24T	DUCT-FLEXIBLE-SILICONE IMPREGNATED 3.00 DIA ----------	AR	
	S1053K24W	DUCT-FLEXIBLE-SILICONE IMPREGNATED 2 PLY 3.00 DIA --- AVAILABLE IN 10 FOOT LENGTHS ONLY	AR	
	S1053E28T	DUCT-FLEXIBLE-NEOPRENE IMPREGNATED 3-1/2 DIA ----------	AR	
	S1053K28W	DUCT-FLEXIBLE-SILICONE IMPREGNATED 2 PLY 3-1/2 DIA -- AVAILABLE IN 10 FOOT LENGTHS ONLY	AR	
	S1053E32T	DUCT-FLEXIBLE-NEOPRENE IMPREGNATED 4.00 DIA ----------	AR	
	S1053K32T	DUCT-FLEXIBLE-SILICONE IMPREGNATED 4.00 DIA ---------- AVAILABLE IN 10 FOOT LENGTHS ONLY	AR	
-20	S1047-1	SEAL-SPONGE RUBBER-1/4 THICK AVAILABLE BY THE FOOT ------	AR	
	S1047-2	SEAL-SPONGE RUBBER-5/16 THICK AVAILABLE BY THE FOOT -----	AR	
-21	S1055-1	CHANNEL-EXTRUDED RUBBER AVAILABLE BY THE FOOT ----------	AR	
-22	S1071-1	TUBE-POLYETHYLENE-1/4 DIA AVAILABLE BY THE FOOT ----------	AR	
	S1071-3	TUBE-POLYETHYLENE-3/8 DIA AVAILABLE BY THE FOOT ----------	AR	
	S1071-4	TUBE-POLYETHYLENE-1/2 DIA AVAILABLE BY THE FOOT ----------	AR	
	S1071-5	TUBE-POLYETHYLENE-5/8 DIA AVAILABLE BY THE FOOT ----------	AR	
-23	S1084-1	SEAL-EXTRUDED RUBBER AVAILABLE BY THE FOOT ----------	AR	
-24	S1110ET	DUCT-OVAL-FLEXIBLE-NEOPRENE IMPREGNATED ---------- AVAILABLE IN 10 FOOT LENGTHS ONLY	AR	
-25	S1346-1	SEAL-SPONGE RUBBER AVAILABLE IN 12 FT LENGTHS ONLY ------	AR	
-26	S1366-1	MOULDING-EXTRUDED PLASTIC-SAND AVAILABLE BY THE FOOT ----	AR	
	S1366-2	MOULDING-EXTRUDED PLASTIC-FAWN AVAILABLE BY THE FOOT ----	AR	
	S1366-3	MOULDING-EXTRUDED PLASTIC-BLACK AVAILABLE BY THE FOOT ---	AR	

CONTINUED ON NEXT PAGE

Bulk Items (Cont)

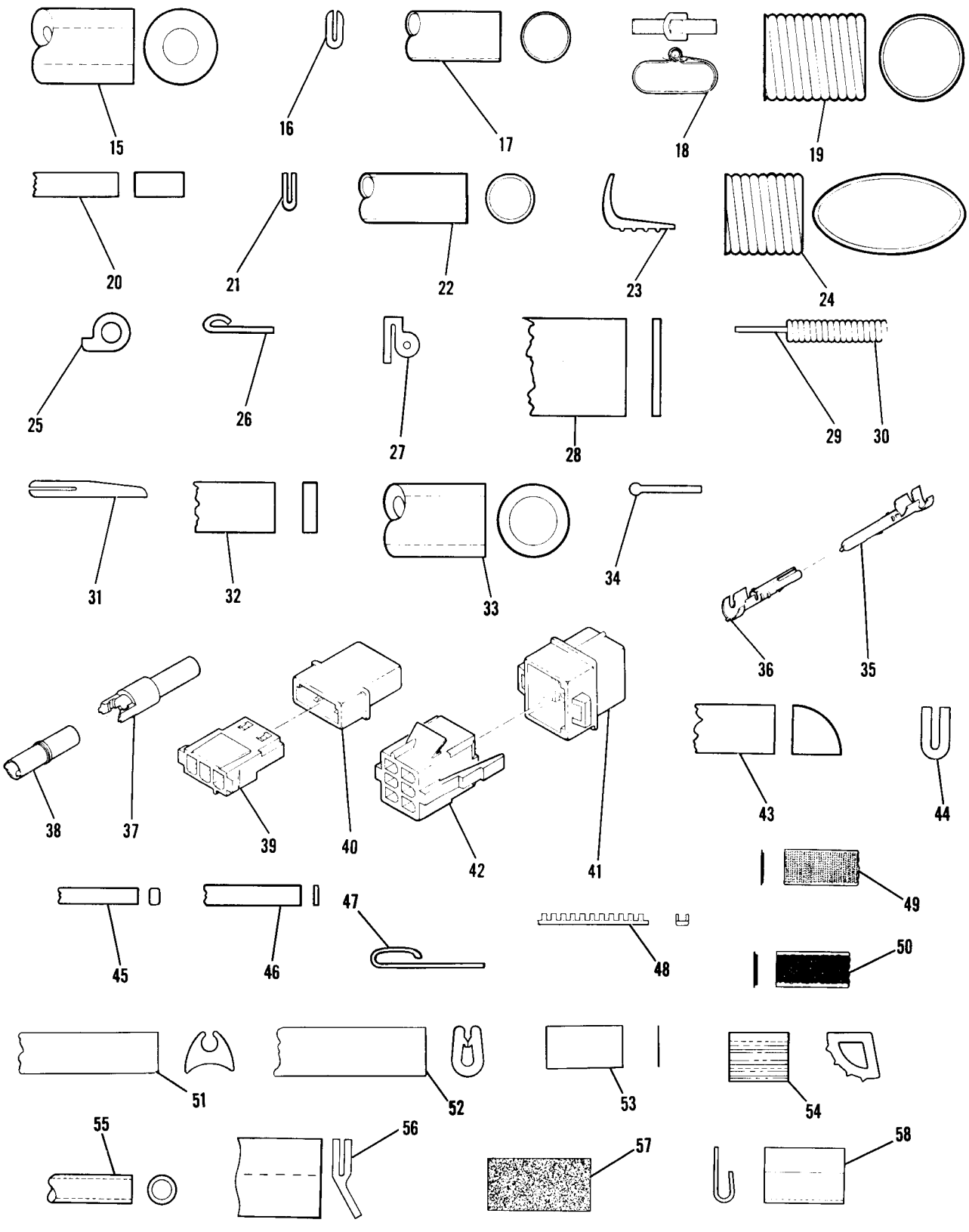

Figure 1. Miscellaneous Bulk Items

FIGURE AND INDEX NO.	PART NUMBER	DESCRIPTION 1 2 3 4 5 6 7	UNITS PER ASSY	USABLE ON CODE
1 -	S1366-3	MOULDING-EXTRUDED PLASTIC-BLACK AVAILABLE BY THE FOOT	AR	
-27	S1378-1	SEAL-SPONGE RUBBER-BEIGE AVAILABLE IN 7 FT LENGTHS ONLY	AR	
	S1378-2	SEAL-SPONGE RUBBER-CLOUD GRAY AVAILABLE IN 7 FT LENGTHS ONLY	AR	
-28	S1389-1	SEALER STRIP-FELT-1.00 WIDE AVAILABLE BY THE FOOT	AR	
	S1389-2	SEALER STRIP-FELT-1/4 WIDE AVAILABLE BY THE FOOT	AR	
	S1389-3	SEALER STRIP-FELT-2.00 WIDE AVAILABLE BY THE FOOT	AR	
	S1389-4	SEALER STRIP-FELT-1-3/4 WIDE AVAILABLE BY THE FOOT	AR	
	S1389-5	SEALER STRIP-FELT-1-1/4 WIDE AVAILABLE BY THE FOOT	AR	
	S1389-6	SEALER STRIP-FELT-2-1/4 WIDE AVAILABLE BY THE FOOT	AR	
	S1389-7	SEALER STRIP-FELT-1-3/8 WIDE AVAILABLE BY THE FOOT	AR	
-29	S1398-1	CONTROL-PUSH PULL-WIRE AVAILABLE BY THE FOOT	AR	
-30	S1398-2	CONTROL-PUSH PULL-CASING AVAILABLE BY THE FOOT	AR	
-31	S1415-1	MOULDING-EXTRUDED VINYL	AR	
-32	S1441-1	SEAL-SPONGE RUBBER-3/8 WIDE AVAILABLE BY THE FOOT	AR	
	S1441-2	SEAL-SPONGE RUBBER-1/4 WIDE AVAILABLE BY THE FOOT	AR	
	S1441-3	SEAL-SPONGE RUBBER-1/2 WIDE AVAILABLE BY THE FOOT	AR	
-33	S1495-3	HOSE-RUBBER-3/16 ID AVAILABLE BY THE FOOT	AR	
	S1495-4	HOSE-RUBBER-1/4 ID AVAILABLE BY THE FOOT	AR	
	S1495-6	HOSE-RUBBER-3/8 ID AVAILABLE BY THE FOOT	AR	
	S1495-8	HOSE-RUBBER-1/2 ID AVAILABLE BY THE FOOT	AR	
	S1495-10	HOSE-RUBBER-5/8 ID AVAILABLE BY THE FOOT	AR	
-34	S1611-1	SEAL-EXTRUDED VINYL AVAILABLE BY THE FOOT	AR	
-35	S1635-1	ELECTRICAL PIN WIRE SIZE 22-18	AR	
	S1635-2	ELECTRICAL PIN WIRE SIZE 18-14	AR	
	S1635-3	ELECTRICAL PIN WIRE SIZE 18 GA-2 WIRE	AR	
-36	S1636-1	ELECTRICAL SOCKET WIRE SIZE 22-18	AR	
	S1636-2	ELECTRICAL SOCKET WIRE SIZE 18-14	AR	
	S1636-3	ELECTRICAL SOCKET WIRE SIZE 18 GA-2 WIRE	AR	
-37	S1637-1	HOUSING-ELECTRICAL PIN	AR	
-38	S1637-2	HOUSING-ELECTRICAL SOCKET	AR	
-39	S1638-1	HOUSING-ELECTRICAL SOCKET-3 CIRCUIT	AR	
-40	S1638-2	HOUSING-ELECTRICAL PIN-3 CIRCUIT	AR	
-41	S1640-6	HOUSING-ELECTRICAL PIN-6 CAVITY	AR	
	S1640-9	HOUSING-ELECTRICAL PIN-9 CAVITY	AR	
	S1640-12	HOUSING-ELECTRICAL PIN-12 CAVITY	AR	
	S1640-15	HOUSING-ELECTRICAL PIN-15 CAVITY	AR	
-42	S1641-6	HOUSING-ELECTRICAL SOCKET-6 CAVITY	AR	
	S1641-9	HOUSING-ELECTRICAL SOCKET-9 CAVITY	AR	
	S1641-12	HOUSING-ELECTRICAL SOCKET-12 CAVITY	AR	
	S1641-15	HOUSING-ELECTRICAL SOCKET-15 CAVITY	AR	
-43	S1116	SEAL-NEOPRENE AVAILABLE IN 12 FOOT LENGTHS ONLY	AR	
-44	S1356	SEAL-EXTRUDED RUBBER AVAILABLE BY THE FOOT	AR	
-45	S1614	LACING-KOROSEAL AVAILABLE BY THE FOOT	AR	
-46	3690-1/8	FILM-BLACK VINYL-1/8 IN WIDE AVAILABLE BY THE ROLL	AR	
	3690-1/4	FILM-BLACK VINYL-1/4 IN WIDE AVAILABLE BY THE ROLL	AR	
	3690-1/2	FILM-BLACK VINYL-1/2 IN WIDE AVAILABLE BY THE ROLL	AR	
-47	S1948-2-1	TRIM-EXTRUDED CLOUD GRAY AVAILABLE BY THE FOOT	AR	
	S1948-2-2	TRIM-EXTRUDED EBONY AVAILABLE BY THE FOOT	AR	
	S1948-2-3	TRIM-EXTRUDED SILVER TEAL BLUE AVAILABLE BY THE FOOT	AR	
	S1948-2-4	TRIM-EXTRUDED MARIGOLD AVAILABLE BY THE FOOT	AR	
	S1948-2-5	TRIM-EXTRUDED SUN GOLD AVAILABLE BY THE FOOT	AR	
	S1948-2-6	TRIM-EXTRUDED LIGHT OLIVE AVAILABLE BY THE FOOT	AR	
	S1948-2-7	TRIM-EXTRUDED CLOVE BROWN AVAILABLE BY THE FOOT	AR	
	S1948-2-8	TRIM-EXTRUDED HOLIDAY BLUE AVAILABLE BY THE FOOT	AR	
	S1948-2-9	TRIM-EXTRUDED FIESTA RED AVAILABLE BY THE FOOT	AR	
	S1948-2-10	TRIM-EXTRUDED PICNIC GREEN AVAILABLE BY THE FOOT	AR	
	S1948-2-11	TRIM-EXTRUDED BOGOTA BLUE AVAILABLE BY THE FOOT	AR	
	S1948-2-12	TRIM-EXTRUDED TAHITIAN RED AVAILABLE BY THE FOOT	AR	
	S1948-2-13	TRIM-EXTRUDED CYPRUS GREEN AVAILABLE BY THE FOOT	AR	
-48	S1050-1	GROMMET-CATERPILLER .056 WIDE	AR	
	S1050-2	GROMMET-CATERPILLER .090 WIDE	AR	
	S1050-3	GROMMET-CATERPILLER .131 WIDE	AR	
-49	S2092-3	FABRIC FASTENER-HOOK AVAILABLE BY THE FOOT	AR	
-50	S2092-4	FABRIC FASTENER-PILE AVAILABLE BY THE FOOT	AR	
-51	S1511-1	FAIRING-EXTRUDED VINYL AVAILABLE BY THE FOOT	AR	
-52	S2195-2	TRIM-MOULDING AVAILABLE BY THE FOOT	AR	
-53	Y8562	TAPE-POLYURETHANE-1.00 WIDE AVAILABLE BY THE FOOT	AR	
-54	S2249-1	SEAL-NEOPRENE AVAILABLE IN 12 FT LENGTHS ONLY	AR	
-55	110691	WIRE-TEFLON AVAILABLE BY THE FOOT	AR	
-56	S2145-1	SEAL-EXTRUDED RUBBER AVAILABLE BY THE FOOT	AR	
-57	S2108-1	SEAL-VINYL FOAM .50 X .25 AVAILABLE BY THE FOOT	AR	
	S2108-2	SEAL-VINYL FOAM .25 X .062 AVAILABLE BY THE FOOT	AR	
	S2108-3	SEAL-VINYL FOAM .38 X .25 AVAILABLE BY THE FOOT	AR	
	S2108-4	SEAL-VINYL FOAM .50 X .187 AVAILABLE BY THE FOOT	AR	
-58	S1029-1	J SECTION AVAILABLE BY THE FOOT	AR	

Placards

ABCDEFGHIJKLMN
OPQRSTUVWXYZ
-1234567890

ABCDEFGHIJKLMN
OPQRSTUVWXYZ
-1234567890

ABCDEFGHIJKLMN
OPQRSTUVWXYZ
-1234567890

Figure 2. (Sheet 1) Placards, Nameplates & Exterior Markings

Placards (Cont)

S1500 TYPE STENCILS *
FOR SLANT GOTHIC LETTERS & NUMERALS

LETTERS AND NUMERALS ARE AVAILABLE IN 10 INCH AND 12 INCH HEIGHTS IN EITHER LEFT HAND OR RIGHT HAND SLANT.

LETTERS AVAILABLE ARE A THRU Z.
NUMERALS AVAILABLE ARE 0 THRU 9.

TO ORDER:

EACH LETTER OR NUMERAL WANTED MUST BE ORDERED BY GIVING BASIC PART NUMBER, FOLLOWED BY HEIGHT DESIRED, FOLLOWED BY SPECIFIC LETTER OR NUMERAL AND THE DESIGNATOR L OR R TO INDICATE LEFT OR RIGHT HAND SLANT.

EXAMPLE: S1500 - 10 - M L

- S1500 — BASIC PART NO.
- 10 — HEIGHT WANTED
- M — LETTER WANTED
- L — DIRECTION OF SLANT

S1600 TYPE STENCILS *
FOR VERTICAL GOTHIC LETTERS & NUMERALS

LETTERS AND NUMERALS ARE AVAILABLE IN 6 INCH, 12 INCH AND 20 INCH HEIGHTS. LETTERS AVAILABLE ARE A THRU Z. NUMERALS AVAILABLE ARE 0 THRU 9.

TO ORDER:

EACH LETTER OR NUMERAL WANTED MUST BE ORDERED BY GIVING BASIC PART NUMBER, FOLLOWED BY HEIGHT DESIRED, FOLLOWED BY SPECIFIC LETTER OR NUMERAL WANTED.

EXAMPLE: S1600 - 20 - N

- S1600 — BASIC PART NO.
- 20 — HEIGHT WANTED
- N — LETTER WANTED

* EACH STENCIL PROVIDES FOR EITHER BACKGROUND OR CENTER MASK.

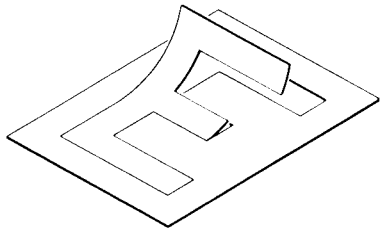

Figure 2. (Sheet 2) Placards, Nameplates & Exterior Markings

Placards (Cont)

Figure 2. (Sheet 3) Placards, Nameplates & Exterior Markings

FIGURE AND INDEX NO.	PART NUMBER	DESCRIPTION 1 2 3 4 5 6 7	UNITS PER ASSY	USABLE ON CODE
2 -		PLACARDS, NAMEPLATES & EXTERIOR MARKINGS	NP	A
- 1	0405027-12	PLACARD-CONTROL WHEEL 182 ONLY	1	B
- 2	0405027-13	PLACARD-CONTROL WHEEL SKYLANE ONLY	1	B
- 3	0705038-1	NAMEPLATE-EXTERIOR LH 182 ONLY	1	B
- 4	0705038-2	NAMEPLATE-EXTERIOR RH 182 ONLY	1	B
- 5	0705039-1	NAMEPLATE-EXTERIOR LH SKYLANE ONLY	1	B
- 6	0705039-2	NAMEPLATE-EXTERIOR RH SKYLANE ONLY	1	B
- 7	0705039-3	PLACARD-EXTERIOR LH	1	B
- 8	0705039-4	PLACARD-EXTERIOR RH	1	B
- 9	0705035-1	PLACARD-MARKER BEACON	1	E
-10	0713047	PLACARD-FINISH & TRIM	1	
-11	1205024-1	PLACARD-BATTERY POLARITY	1	
-12	1205043-1	PLACARD-WINTERIZATION	1	
-13	S1397-4	PLACARD-ENGINE OIL CHANGE	1	
-14	0705048-25	PLACARD-FUEL SELECTOR	1	
-15	0705048-26	PLACARD-FUEL SELECTOR EXTENDED RANGE	1	
-16	S1713-1	PLACARD-HANDS OF FRIENDSHIP	1	
-17	S1714-1	PLACARD-ALLIANCE FOR PROGRESS	1	
-18	0400213-6	PLACARD-COMPASS SET CORRECTION	1	

CONTINUED ON NEXT PAGE

Placards (Cont)

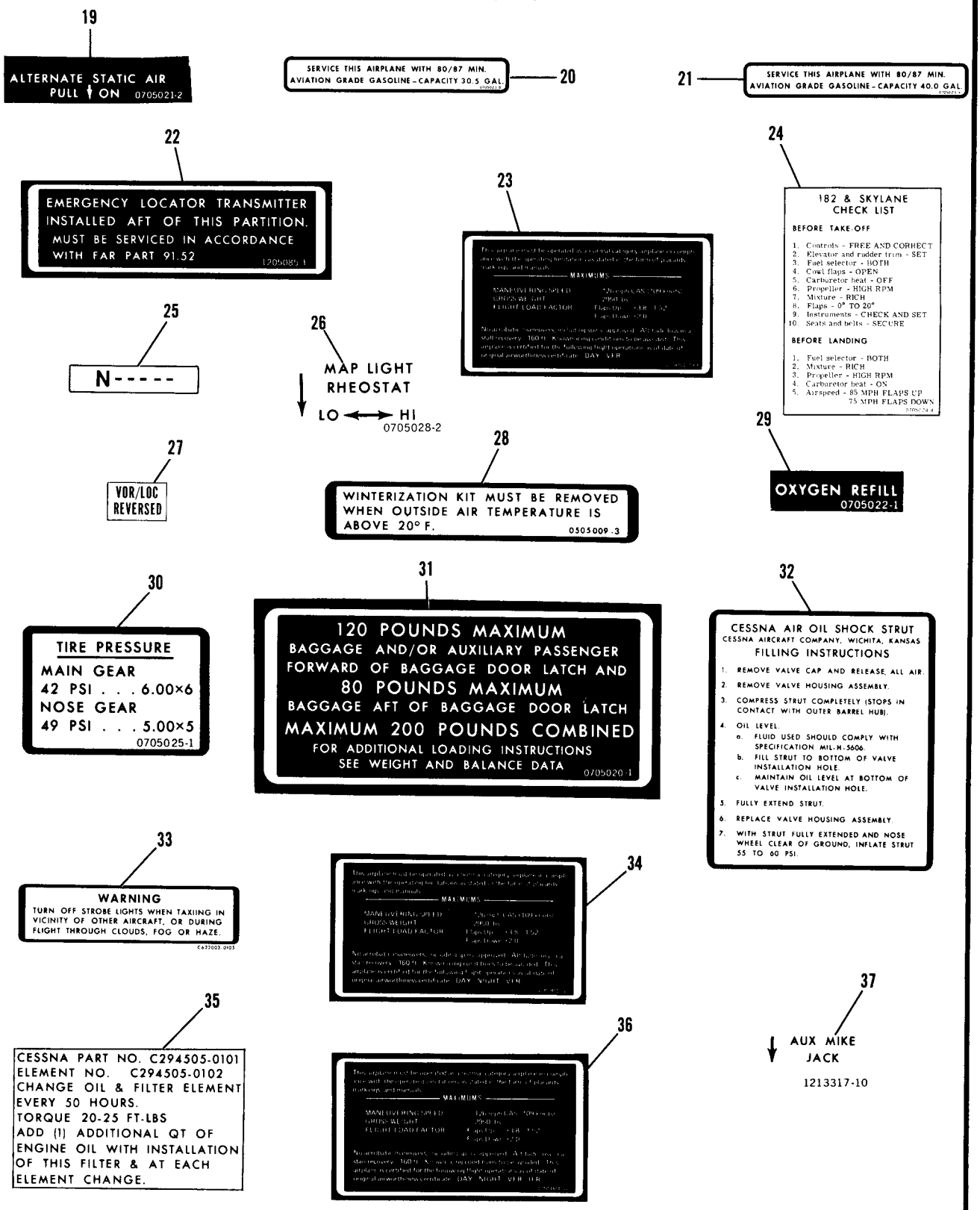

Figure 2. (Sheet 4) Placards, Nameplates & Exterior Markings

FIGURE AND INDEX NO.	PART NUMBER	DESCRIPTION 1 2 3 4 5 6 7	UNITS PER ASSY	USABLE ON CODE
2 -19	0705021-2	PLACARD-ALTERNATE STATIC AIR	1	
-20	0705023-8	PLACARD-FUEL FILL STANDARD	1	
-21	0705023-9	PLACARD-FUEL FILL LONG RANGE	1	
-22	1205085-1	PLACARD-ELT	1	
-23	1205001-139	PLACARD-OPERATIONAL LIMITATIONS DAY VFR	1	E
-24	0705024-4	PLACARD-PILOT CHECK LIST	1	B
-25	1205009-1	PLACARD-AIRCRAFT IDENTIFICATION	1	
-26	0705028-2	PLACARD-CONTROL WHEEL MAPLIGHT	1	
-27	0705036-2	PLACARD-BACK COURSE INDICATOR LIGHT	1	B
-28	0505009-3	PLACARD-WINTERIZATION	1	
-29	0705022-1	PLACARD-OXYGEN REFILL	1	
-30	0705025-1	PLACARD-TIRE PRESSURE	1	
-31	0705020-1	PLACARD-BAGGAGE & AUXILIARY SEAT	1	B
-32	0543032-3	PLACARD-NOSE GEAR SHOCK STRUT	1	
-33	C622003-0105	PLACARD-STROBE LIGHT	1	
-34	1205001-120	PLACARD-OPERATIONAL LIMITATIONS DAY-NIGHT-VFR	1	E
-35	1205001-121	PLACARD-OPERATIONAL LIMITATIONS DAY-NIGHT-VFR-IFR	1	E
-36	1250410-3	PLACARD-OIL FILTER	1	
-37	1213317-1	PLACARD-AUXILIARY MIKE JACK	1	

CONTINUED ON NEXT PAGE

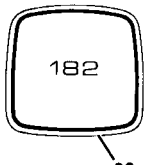

38

39

40

41

42

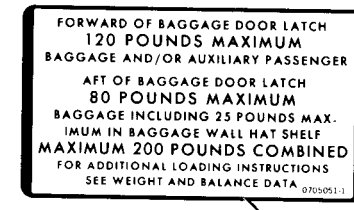

43

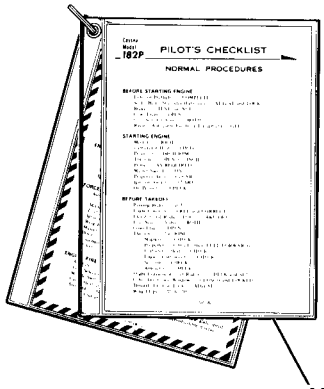

44

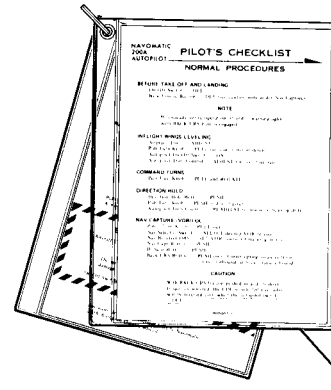

45

46

47

48

49

50

51

52

53

54

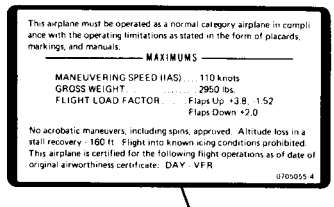

55

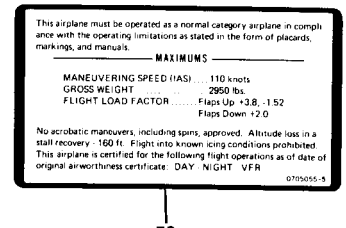

56

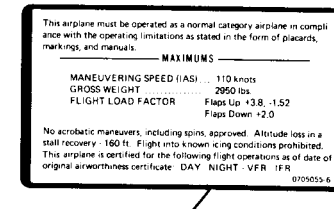

57

60

58

59

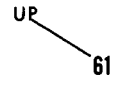

61

62

FIGURE AND INDEX NO.	PART NUMBER	DESCRIPTION 1 2 3 4 5 6 7	UNITS PER ASSY	USABLE ON CODE
2 -38	0505052-3	EMBLEM-CONTROL WHEEL 182 ONLY	1	F
-39	0505052-4	EMBLEM-CONTROL WHEEL SKYLANE ONLY	1	C
-40	0505052-5	EMBLEM-CONTROL WHEEL SKYLANE II ONLY	1	C
-41	2005012-3	PLACARD-BACK COURSE INDICATOR LIGHT	1	F
-42	2005012-4	PLACARD-BACK COURSE INDICATOR LIGHT	1	F
-43	0705051-1	PLACARD-BAGGAGE & AUXILIARY SEAT	1	C
-44	0705182-3	PILOT CHECK LIST ASSY	1	F
-45	0505055-1	PILOT CHECK LIST ASSY NAV 200A	1	F
-46	1205102-1	NAMEPLATE-EXTERIOR WING TIP	1	F
-47	1205102-2	NAMEPLATE-EXTERIOR WING TIP	1	F
-48	0705047-1	PLACARD-EXTERIOR 182 ONLY	1	F
-49	0705047-2	PLACARD-EXTERIOR 182 ONLY	1	F
-50	0705047-3	PLACARD-EXTERIOR SKYLANE ONLY	1	F
-51	0705047-4	PLACARD-EXTERIOR SKYLANE ONLY	1	F
-52	0705047-5	PLACARD-EXTERIOR SKYLANE II ONLY	1	F
-53	0705047-6	PLACARD-EXTERIOR SKYLANE II ONLY	1	F
-54	1205086-1	PLACARD-ELECTRIC TRIM	1	D
-55	0705055-4	PLACARD-OPERATIONAL LIMITATIONS DAY VFR	1	D
-56	0705055-5	PLACARD-OPERATIONAL LIMITATIONS DAY NIGHT VFR	1	D
-57	0705055-6	PLACARD-OPERATIONAL LIMITATIONS DAY NIGHT VFR IFR	1	D
-58	0705057-1	PLACARD-EXTERIOR SKYLANE	1	D
-59	0705057-2	PLACARD-EXTERIOR SKYLANE II	1	D
-60	0505003-3	PLACARD-ELECTRIC TRIM CONTROL WHEEL	1	D
-61	0505003-2	PLACARD-ELECTRIC TRIM CONTROL WHEEL	1	D
-62	0405038-1	NAMEPLATE-CESSNA	1	D
	0405038-2	NAMEPLATE-CESSNA ALASKA ONLY	1	D

A---182 SERIAL 18262466 & ON
B---182 SERIAL 18262466 THRU 18263475
C---182 SERIAL 18263476 & ON
D---182 SERIAL 18264296 & ON
E---182 SERIAL 18262466 THRU 18264295
F---182 SERIAL 18263476 THRU 18264295

Wing

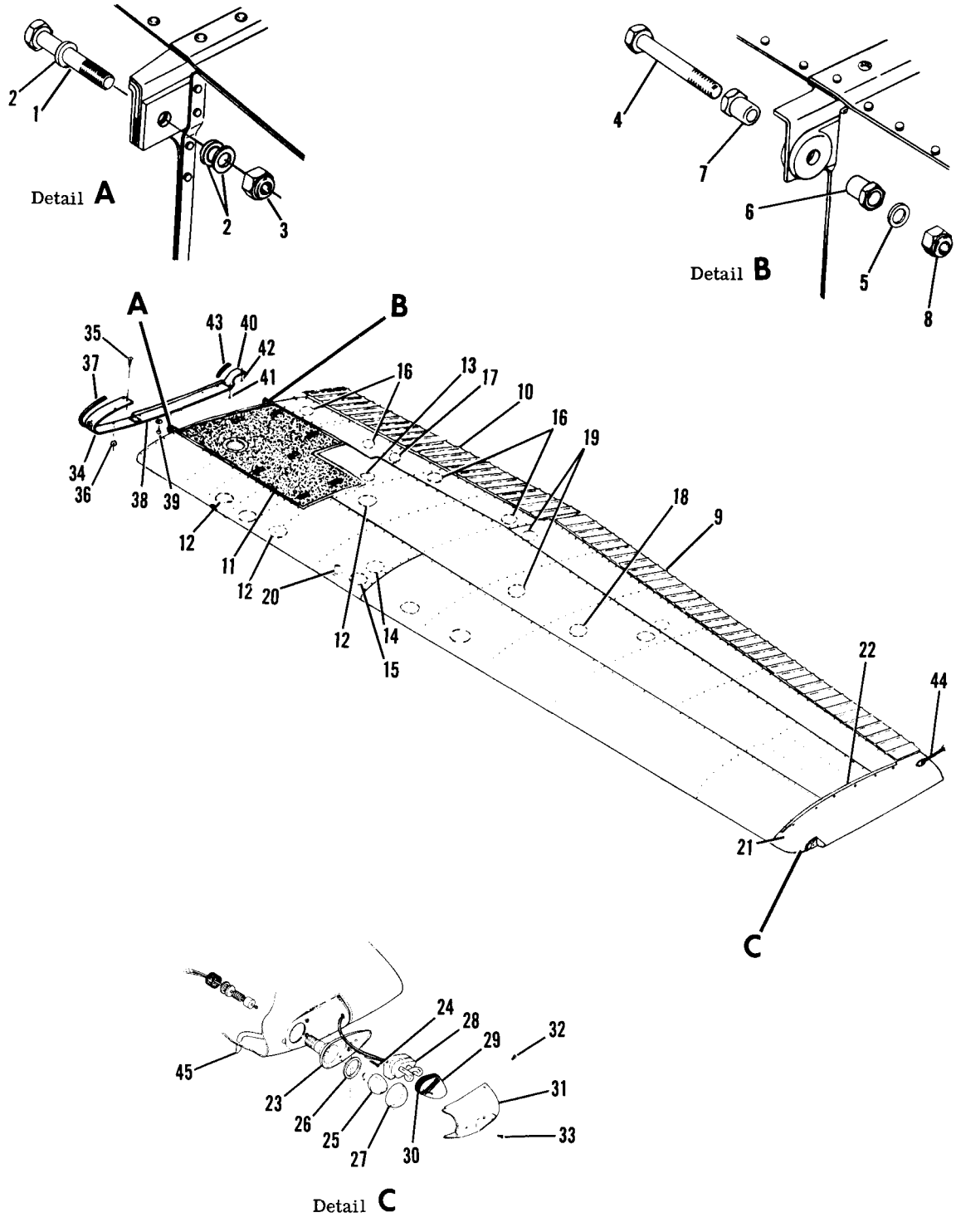

Figure 3. Wing Assembly Complete

FIGURE AND INDEX NO.	PART NUMBER	DESCRIPTION 1 2 3 4 5 6 7	UNITS PER ASSY	USABLE ON CODE
3 -		WING ASSY COMPLETE-LH STANDARD RANGE	NP	
		WING ASSY COMPLETE-LH EXTENDED RANGE	NP	
		WING ASSY COMPLETE-RH STANDARD RANGE	NP	
		WING ASSY COMPLETE-RH EXTENDED RANGE	NP	
		ATTACHING PARTS		
- 1	AN8-23A	BOLT	1	
- 2	AN960-816	WASHER	3	
- 3	MS20365-820C	NUT	1	
- 4	AN7-20A	BOLT	1	
- 5	AN960-716	WASHER	1	
- 6	0512123-1	BUSHING FWD SIDE	1	
- 7	0512123	BUSHING AFT SIDE	1	
- 8	MS20365-720C	NUT	1	
		---*---		
- 9	SEE FIG 10	AILERON INSTALLATION	1	
-10	SEE FIG 11	FLAP INSTALLATION	1	
-11	SEE FIG 8	FUEL CELL INSTALLATION STANDARD RANGE	1	
	SEE FIG 8	FUEL CELL INSTALLATION EXTENDED RANGE	1	
-12	S225-2	PLATE-INSPECTION	AR	
-13	1222012-1	PLATE-INSPECTION	1	
-14	0723605-9	PLATE ASSY-AFT LH	1	
	0723605-7	PLATE ASSY-AFT RH	1	
-15	0723605-8	PLATE ASSY-FWD LH	1	
	0723605-6	PLATE ASSY-FWD RH	1	
		ATTACHING PARTS		
	S1022Z8-8	SCREW	3	
		---*---		
-16	S225-1	PLATE-INSPECTION	3	
-17	S225-1	PLATE-INSPECTION RH ONLY	1	
		ATTACHING PARTS		
	S1021Z8-8	SCREW	3	
		---*---		
-18	1220094-2	PLATE-INSPECTION	1	
-19	1222022-1	PLATE-INSPECTION	2	
		ATTACHING PARTS		
	S1022Z8-6	SCREW	6	
	S1022Z8-8	SCREW LH ONLY	8	
		---*---		
-20	0511062-4	WING UNIT-STALL WARNING LH WING ONLY	1	
	0511062-15	WING UNIT-STALL WARNING LH WING ONLY HEATED	1	
		ATTACHING PARTS		
	S1022Z8-6	SCREW	4	
	NAS395-14-3	NUT	1	
		---*---		
	SEE FIG 4	STRUCTURE ASSY-WING STANDARD & EXTENDED RANGE	1	
-21	0723200-5	TIP ASSY-LH WING	1	
	0723200-6	TIP ASSY-RH WING	1	
		ATTACHING PARTS		
	AN525-832R8	SCREW	12	
		---*---		
	1570102-10	STRAP ASSY	1	A
	1570102-16	STRAP ASSY	1	B
-22	0723200-9	STIFFENER USED ON UPPER LH TIP	1	
	0723200-10	STIFFENER USED ON UPPER RH TIP	1	
	0723200-11	STIFFENER USED ON LOWER LH TIP	1	
	0723200-12	STIFFENER USED ON LOWER RH TIP	1	
-23	C622001-0201	LIGHT BASE ASSY-WING POSITION	1	
		ATTACHING PARTS		
-24	AN507-632R8	SCREW	3	
	NAS1329A06K120	NUTPLATE	3	
		---*---		
-25	A7512-12	BULB-WING NAVIGATION LIGHT 12 VOLT	1	
-26	A1257A	GASKET-WING NAVIGATION LIGHT GMC	1	
-27	A1280-2	LENS-WING NAVIGATION LIGHT RED GMC	1	
	A1280-3	LENS-WING NAVIGATION LIGHT GREEN GMC	1	

CONTINUED ON NEXT PAGE

FIGURE AND INDEX NO.	PART NUMBER	DESCRIPTION 1 2 3 4 5 6 7	UNITS PER ASSY	USABLE ON CODE
3 -	C622006-0101	STROBE TUBE & LENS ASSY	1	
-28	C622006-0102	STROBE TUBE ASSY	1	
-29	C622006-0103	LENS-STROBE	1	
-30	C622006-0105	GASKET-LENS	1	
-31	0723201-3	SHIELD-WING POSITION LIGHT LH WITH STROBE LIGHT	1	
	0723201-4	SHIELD-WING POSITION LIGHT RH WITH STROBE LIGHT	1	
	0723201-1	SHIELD-WING POSITION LIGHT LH LESS STROBE LIGHT	1	
	0723201-2	SHIELD-WING POSITION LIGHT RH LESS STROBE LIGHT	1	
		ATTACHING PARTS		
-32	AN507-632R8	SCREW	2	
-33	AN507-632R12	SCREW	1	
	NAS1329A06K120	NUT	2	
		---*---		
-34	0720618-1	FILLET ASSY-WING TO FUSELAGE LEADING EDGE LH	1	A
	0720619-1	FILLET ASSY-WING TO FUSELAGE LEADING EDGE LH	1	B
	0720618-2	FILLET ASSY-WING TO FUSELAGE LEADING EDGE RH	1	A
	0720619-2	FILLET ASSY-WING TO FUSELAGE LEADING EDGE RH	1	B
		ATTACHING PARTS		
-35	S1022Z8-8	SCREW	2	
-36	S290D832	WASHER	2	
	AN507-832R6	SCREW	4	
		---*---		
-37	0520005-3	RUB-STRIP	1	A
	S1078-1	SEALER	1	B
	S1389-10	SEALER STRIP	1	B
-38	0720614-1	FAIRING-WING TO FUSELAGE LH	1	
	0720614-2	FAIRING-WING TO FUSELAGE RH	1	
		ATTACHING PARTS		
-39	S1022Z8-8	SCREW	5	
	S290D832	WASHER	5	
		---*---		
-40	0720613-1	FAIRING ASSY-AFT-WING TO FUSELAGE LH	1	
	0720613-2	FAIRING ASSY-AFT-WING TO FUSELAGE RH	1	
		ATTACHING PARTS		
-41	S1021Z8-6	SCREW	3	
-42	S1021Z8-8	SCREW	1	
		---*---		
-43	S202R8	MOULDING 9.12 IN LG BLK REF S202R89.12	1	A
-44	C592001-0103	STATIC DISCHARGER	2	
-45	1221201-3	DETECTOR-WING POSITION LIGHT LH	1	
	1221201-4	DETECTOR-WING POSITION LIGHT RH	1	

A---182 SERIAL 18262466 THRU 18264295
B---182 SERIAL 18264296 & ON

FIGURE AND INDEX NO.	PART NUMBER		DESCRIPTION 1 2 3 4 5 6 7	UNITS PER ASSY	USABLE ON CODE
4 -	0722182-29		STRUCTURE ASSY-LH WING	1	
	0722182-31		STRUCTURE ASSY-LH WING EXTENDED RANGE	1	
	0722182-28		STRUCTURE ASSY-RH WING	1	
	0722182-30		STRUCTURE ASSY-RH WING EXTENDED RANGE	1	
- 1	SEE FIG 5B		LEADING EDGE ASSEMBLIES-WING	1	
	SEE FIG 7A		SKINS & STRINGERS INSTALLATION	1	
- 2	SEE FIG 6A		SPAR ASSEMBLIES	1	
	S1131-1		INSERT	2	
- 3	S1071-1		TUBE 63.7 IN LG BULK ITEM REF S1071-1-63.7	1	
			ATTACHING PARTS		
- 4	AN742D4		CLAMP TIN	1	
	S1021Z8-8		SCREW	1	
	NAS395-16-3		NUT	1	
			---*---		
- 5	0722017-1		RIB ASSEMBLY-WING ROOT LH	1	
	0722017-2		RIB ASSEMBLY-WING ROOT RH	1	
- 6	1221101-3		REINFORCEMENT-WING ROOT RIB LH	1	
	1221101-4		REINFORCEMENT-WING ROOT RIB RH	1	
- 7	0721100-6		ANGLE-STIFFENER	1	
- 8	0721100-7		ANGLE-STIFFENER	2	
- 9	1220019-18	*	RIB-LH	1	
	0720617-5	*	RIB-RH	1	
-10	0721111-21		RIB ASSEMBLY-WING FUEL BAY LH	1	
	0721111-25		RIB ASSEMBLY-WING FUEL BAY RH	1	
-11	1220019-19	*	RIB ASSEMBLY-LH STA 85.625	1	
	1220019-20	*	RIB ASSEMBLY-RH STA 85.625	1	
	NAS697A08		NUTPLATE	2	
-12	0721111-23		RIB-WING FUEL BAY LH	1	
	0721111-24		RIB-WING FUEL BAY RH	1	
-13	1220019-21	*	RIB-LH STA 85.625	1	
	1220019-22	*	RIB-RH STA 85.625	1	
-14	0721100-7		ANGLE-STIFFENER	2	
-15	0721100-6		ANGLE-STIFFENER	1	
-16	0722201-1		RIB-CENTER STA 85.375	1	
-17	0722194-1		RIB ASSY-CENTER WING LH STA 100.00 WEU 0722194-11	1	
	0722194-11		RIB ASSY-CENTER WING LH STA 100.00	1	
	0722194-2		RIB ASSY-CENTER WING RH STA 100.00 WEU 0722194-12	1	
	0722194-12		RIB ASSY-CENTER WING RH STA 100.00	1	
	0523510-25		DOUBLER-LH	1	
	0523510-26		DOUBLER-RH	1	
-18	0722195-1		RIB-CENTER STA 118.00	1	
-19	0523511-6		SPACER	1	
-20	0722196-2		RIB-CENTER STA 136.00	1	
-21	0722197-3		RIB ASSEMBLY-CENTER WING LH STA 154.00	1	
	0722197-4		RIB ASSEMBLY-CENTER WING RH STA 154.00	1	
-22	0722198-1		RIB-CENTER STA 172.00	1	
-23	0722199-1		RIB-CENTER STA 190.00	1	
-24	0722200-1		RIB ASSEMBLY-CENTER LH WING STA 208.00	1	
	0722200-2		RIB ASSEMBLY-CENTER RH WING STA 208.00	1	
	NAS686A08		NUTPLATE	10	
-25	0721107-1		FAIRING-TRAILING EDGE LH STA 208.00	1	
	0721107-2		FAIRING-TRAILING EDGE RH STA 208.00	1	
-26	0523232-2		RIB-TRAILING EDGE ROOT STA 23.625	1	
-27	NAS395-14-3		NUT	2	
-28	1221010-15		RIB ASSEMBLY-FLAP TRACK STA 39.00 & 85.88	2	
			ATTACHING PARTS		
	NAS221-8		SCREW	2	
	AN960-10		WASHER	2	
	MS21044N3		NUT	2	
			---*---		
-29	0523233-6		RIB-TRAILING EDGE LH STA 56.53	1	
	0523233-20		RIB-TRAILING EDGE RH STA 56.53	1	
-30	0523233-7		RIB ASSEMBLY-TRAILING EDGE STA 72.602	1	
-31	0523233-3		RUB STRIP	1	

CONTINUED ON NEXT PAGE

Wing (Cont)

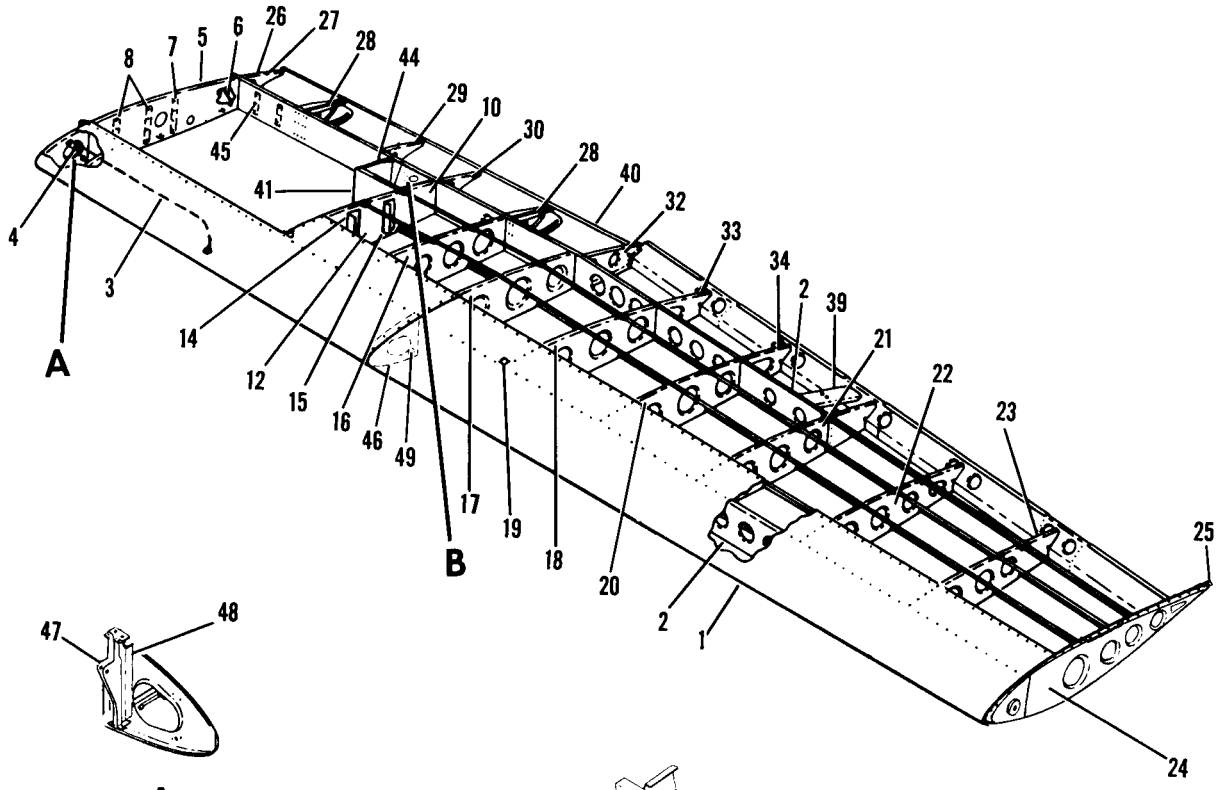

Detail **A**

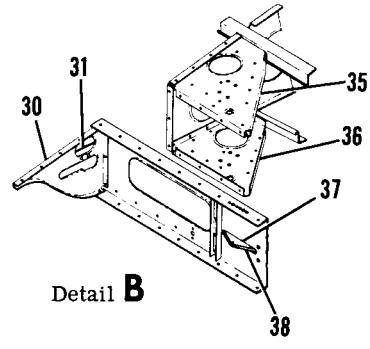

Detail **B**

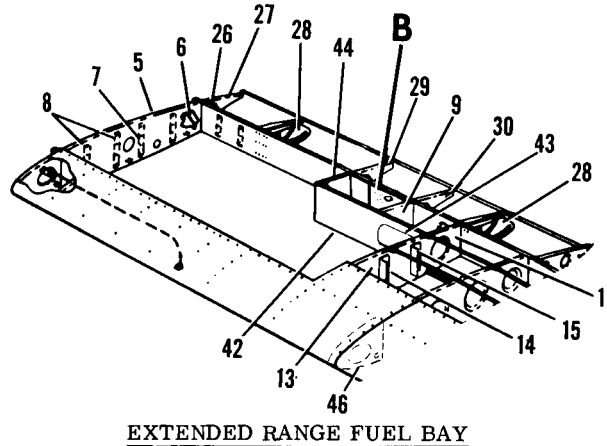

EXTENDED RANGE FUEL BAY

Figure 4. Wing Structure Assembly

FIGURE AND INDEX NO.	PART NUMBER		DESCRIPTION 1 2 3 4 5 6 7	UNITS PER ASSY	USABLE ON CODE
4 -32	0523230		RIB ASSEMBLY-TRAILING EDGE WING LH STA 100.50	1	
	0523230-1		RIB ASSEMBLY-TRAILING EDGE WING RH STA 100.50	1	
	0523230-4		ANGLE-WING LH	1	
	0523230-5		ANGLE-WING RH	1	
-33	0523511-4		RIB-TRAILING EDGE STA 118.00	1	
-34	0523512-4		RIB-TRAILING EDGE STA 136.00	1	
-35	0721117-3		BRACKET-FLAP BELLCRANK UPPER LH	1	
	0720606-5		DOUBLER-FLAP ACTUATOR UPPER RH	1	
	0720606-3	*	DOUBLER-FLAP ACTUATOR UPPER RH	1	
-36	0721117-1		BRACKET-FLAP BELLCRANK LOWER LH	1	
	0720606-8		DOUBLER-FLAP ACTUATOR LOWER RH	1	
	0720606-10	*	DOUBLER-FLAP ACTUATOR LOWER RH	1	
-37	0760618-1		BRACKET-FLAP PULLEY UPPER LH	1	
			ATTACHING PARTS		
	AN520-10R8		SCREW	2	
	MS21044N3		NUT	2	
			---*---		
	0523407-1		BRACKET-FLAP PULLEY UPPER RH	1	
-38	0760618-2		BRACKET-FLAP PULLEY LOWER LH	1	
			ATTACHING PARTS		
	AN520-10R8		SCREW	2	
	MS21044N3		NUT	2	
			---*---		
	0523407		BRACKET-FLAP PULLEY LOWER RH	1	
-39	0523219-2		CHANNEL-AILERON BELLCRANK SUPPORT UPPER LH	1	
	0523219-3		CHANNEL-AILERON BELLCRANK SUPPORT UPPER RH	1	
	0523219-6		CHANNEL-AILERON BELLCRANK SUPPORT LOWER RH	1	
	0523219-7		CHANNEL-AILERON BELLCRANK SUPPORT LOWER LH	1	
-40	0720005-3		STIFFENER-TRAILING EDGE INBOARD	1	
-41	0722012-11		BULKHEAD ASSEMBLY-LH	1	
	0722012-16		BULKHEAD ASSEMBLY-RH	1	
-42	1220019-13	*	BULKHEAD ASSEMBLY-LH	1	
	1220019-35	*	BULKHEAD ASSEMBLY-RH	1	
-43	1220019-17		CUP	1	
-44	0721111-3		RIB-LH STA 56.531	1	
	0721111-33		RIB-RH STA 56.531	1	
-45	0760617-1		BRACKET ASSEMBLY-IDLER LH WING ONLY	1	
-46	0722187-7		RIB-LEADING EDGE LH STA 100.00	1	
	0722187-8		RIB-LEADING EDGE RH STA 100.00	1	
-47	0760607-3		BRACKET ASSEMBLY-AILERON PULLEY LH	1	
	0760607-4		BRACKET ASSEMBLY-AILERON PULLEY RH	1	
-48	1220092-1		STIFFENER-LH	1	
	1220092-2		STIFFENER-RH	1	
-49	S1291-8		GROMMET 1LH & 1RH	2	

NOTE. *DENOTES PARTS USED ON WING WITH EXTENDED RANGE FUEL TANK.

NOTE. WING STRUCTURE ASSEMBLIES INCLUDE ALL WIRING NECESSARY FOR INSTALLATION.

Wing (Cont)

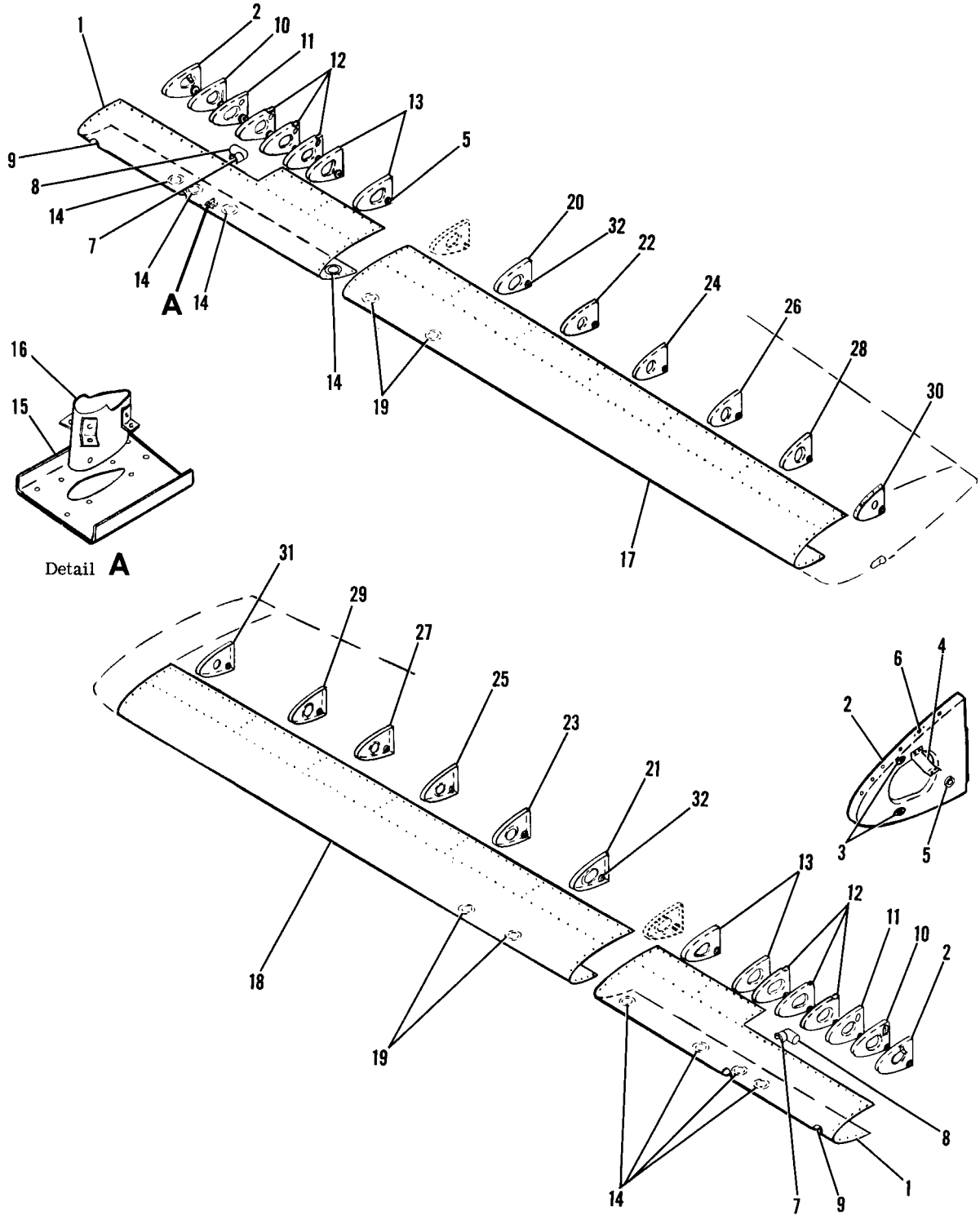

Figure 5. Wing Leading Edge Assembly

FIGURE AND INDEX NO.	PART NUMBER		DESCRIPTION 1 2 3 4 5 6 7	UNITS PER ASSY	USABLE ON CODE
5 -	0722180-55		LEADING EDGE ASSY-WING INBOARD LH STA 23.625 TO 100.00	1	A
	0722180-54		LEADING EDGE ASSY-WING INBOARD RH STA 23.625 TO 100.00	1	A
	0722180-59		LEADING EDGE ASSY-WING INBOARD LH STA 23.625 TO 100.00	1	A
	0722180-58		LEADING EDGE ASSY-WING INBOARD RH STA 23.625 TO 100.00	1	A
- 1	0722180-19		SKIN-LEADING EDGE INBOARD LH	1	B
	0722180-57		SKIN-LEADING EDGE INBOARD LH	1	C
	0722180-20		SKIN-LEADING EDGE INBOARD RH	1	B
	0722180-56		SKIN-LEADING EDGE INBOARD RH	1	C
	0722180-13	*	SKIN-LEADING EDGE INBOARD LH	1	B
	0722180-61	*	SKIN-LEADING EDGE INBOARD LH	1	C
	0722180-14	*	SKIN-LEADING EDGE INBOARD RH	1	B
	0722180-60	*	SKIN-LEADING EDGE INBOARD RH	1	C
- 2	0722183-1		RIB ASSEMBLY-LEADING EDGE LH STA 24.375	1	B
	0722204-1		RIB ASSEMBLY-LEADING EDGE LH STA 24.375	1	C
	0722183-2		RIB ASSEMBLY-LEADING EDGE RH STA 24.375	1	B
	0722204-2		RIB ASSEMBLY-LEADING EDGE RH STA 24.375	1	C
- 3	S1863-3		NUTPLATE	2	
- 4	0422291		BRACKET-PITOT LH ONLY	1	
- 5	S1291-8		GROMMET	8	
- 6	S1860-2A		NUTPLATE UPPER	1	
	A6204-8Z3		NUTPLATE LOWER	1	B
	S1862-2A		NUTPLATE 1 UPPER & 2 LOWER	3	C
- 7	0722202-1		SCOOP-CABIN AIR VENT	1	
- 8	0450314		FITTING ASSEMBLY-CABIN AIR VENT	1	
			ATTACHING PARTS		
	S1021Z8-8		SCREW	1	
	NAS446-4-3		NUT	1	
	AN960-4		WASHER	4	
			---*---		
- 9	1200637-5		SCOOP ASSEMBLY-AIR	1	
	0700692-1		CAP-AIR INLET	1	
			ATTACHING PARTS		
	NAS397-22		CLAMP	1	
	AN960-4		WASHER	4	
			---*---		
-10	0722184-2		RIB-NOSE STA 32.75	1	
-11	0722185-1		RIB-NOSE STA 40.125	1	
-12	0722185-2		RIB-NOSE STA 49.00, STA 57.37 & STA 64.25	3	
-13	0722186-1		RIB-NOSE STA 72.352 & STA 85.375	2	
-14	S226-2		DOUBLER-INSPECTION OPENING	4	
	NAS444-14-3		NUT	3	
-15	0721114-2		DOUBLER-PITOT REINFORCEMENT	1	
-16	0721115-1		CONNECTOR ASSEMBLY-PITOT TUBE	1	
	0722180-51		LEADING EDGE ASSY-WING OUTBOARD LH STA 100.00 TO STA 208.00	1	
	0722180-52		LEADING EDGE ASSY-WING OUTBOARD RH STA 100.00 TO STA 208.00	1	
-17	0722180-49		SKIN-LEADING EDGE LH	1	
-18	0722180-50		SKIN-LEADING EDGE RH	1	
-19	S226-2		DOUBLER-INSPECTION OPENING	2	
-20	0722188-1		RIB-NOSE LH STA 118.00	1	
-21	0722188-2		RIB-NOSE RH STA 118.00	1	
-22	0722189-1		RIB-NOSE LH STA 136.00	1	
-23	0722189-2		RIB-NOSE RH STA 136.00	1	
-24	0722190-1		RIB-NOSE LH STA 154.00	1	
-25	0722190-2		RIB-NOSE RH STA 154.00	1	
-26	0722191-1		RIB-NOSE LH STA 172.00	1	
-27	0722191-2		RIB-NOSE RH STA 172.00	1	
-28	0722192-1		RIB-NOSE LH STA 190.00	1	
-29	0722192-2		RIB-NOSE RH STA 190.00	1	
-30	0722193-1		RIB ASSEMBLY-NOSE LH STA 208.00	1	
-31	0722193-2		RIB ASSEMBLY-NOSE RH STA 208.00	1	
	NAS696A08		NUTPLATE	2	
-32	S1291-8		GROMMET	6	

NOTE. *DENOTES PARTS USED ON WING WITH EXTENDED RANGE FUEL TANK

A---182 SERIAL 18262466 & ON
B---182 SERIAL 18262466 THRU 18264295
C---182 SERIAL 18264296 & ON

Wing (Cont)

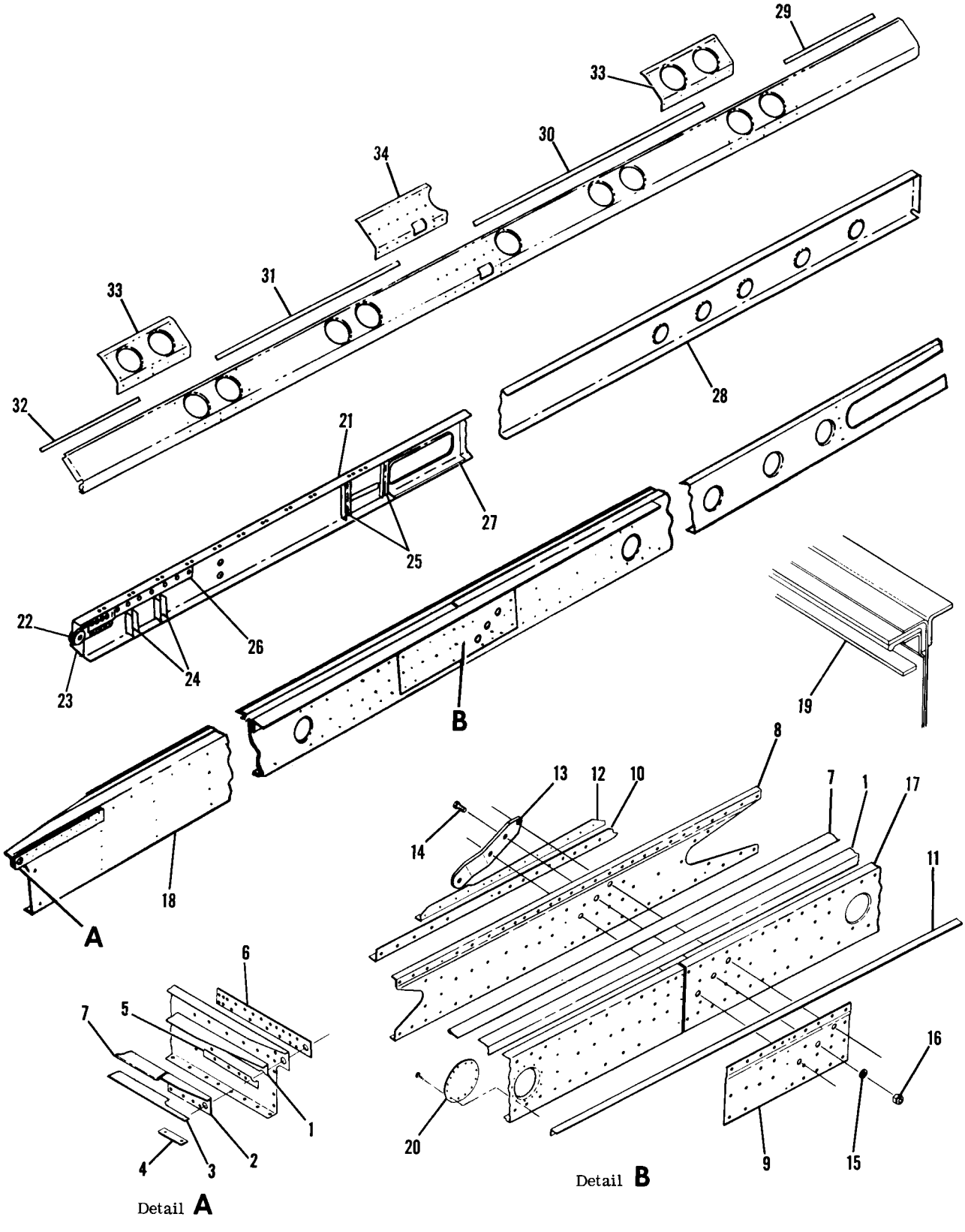

Figure 6. Wing Spar Assemblies

FIGURE AND INDEX NO.	PART NUMBER	DESCRIPTION 1 2 3 4 5 6 7	UNITS PER ASSY	USABLE ON CODE
6 -	0721401-11	SPAR ASSEMBLY-WING FRONT LH STANDARD & LONG RANGE	1	A
	0721401-12	SPAR ASSEMBLY-WING FRONT RH STANDARD & LONG RANGE	1	A
- 1	0721400-3	ANGLE-FRONT SPAR CAP LH	1	
	0721400-4	ANGLE-FRONT SPAR CAP RH	1	
- 2	0523309	ANGLE-FRONT SPAR LH	1	
	0523309-1	ANGLE-FRONT SPAR RH	1	
- 3	0721400-32	SPACER	1	
- 4	1221024-1	SPACER-UPPER FUEL PANEL	1	
- 5	0721400-35	SPACER-FRONT SPAR .125 THICK	1	
- 6	0722707-1	PLATE-FRONT SPAR ROOT REINFORCEMENT	1	
- 7	0523315	PLATE-FRONT SPAR CAP LH	1	
	0523315-1	PLATE-FRONT SPAR CAP RH	1	
- 8	0721400-13	CHANNEL-FRONT SPAR SPLICE LH	1	
	0721400-14	CHANNEL-FRONT SPAR SPLICE RH	1	
- 9	0721400-17	PLATE-FRONT SPAR SPLICE CHANNEL LH	1	
	0721400-18	PLATE-FRONT SPAR SPLICE CHANNEL RH	1	
-10	0721402-3	ANGLE-FRONT SPAR SPLICE LH	1	
	0721402-4	ANGLE-FRONT SPAR SPLICE RH	1	
-11	0721402-1	ANGLE-FRONT SPAR FORWARD CAP STRIP LH	1	
	0721402-2	ANGLE-FRONT SPAR FORWARD CAP STRIP RH	1	
-12	0721401-37	ANGLE-STIFFENER LH	1	
	0721401-38	ANGLE-STIFFENER RH	1	
-13	0523306	FITTING-FRONT SPAR STRUT	1	
		ATTACHING PARTS		
-14	AN5-7A	BOLT	3	
-15	AN960-516	WASHER	3	
-16	MS21042L5	NUT	3	
		---*---		
-17	0721401-15	CHANNEL-FRONT SPAR OUTBOARD LH	1	
	0721401-16	CHANNEL-FRONT SPAR OUTBOARD RH	1	
-18	0721401-5	CHANNEL-FRONT SPAR INBOARD LH	1	
	0721401-6	CHANNEL-FRONT SPAR INBOARD RH	2	
-19	0721400-33	SPACER	1	
-20	0721400-31	COVER	1	
		ATTACHING PARTS		
	CR163-4-4	RIVET CY	13	
		---*---		
-21	0523400-111	SPAR ASSEMBLY-WING REAR LH	1	
	0523400-112	SPAR ASSEMBLY-WING REAR RH	1	
-22	0422229-11	FITTING-WING SPAR REINFORCEMENT	2	
-23	1620058-1	DOUBLER	1	B
	1620058-2	DOUBLER	1	C
-24	0523409-1	CHANNEL-REINFORCEMENT	2	
-25	0523409-2	CHANNEL-REINFORCEMENT	2	
-26	0523400-20	ANGLE-REAR SPAR REINFORCEMENT LH	1	
	0523400-21	ANGLE-REAR SPAR REINFORCEMENT RH	1	
-27	0523400-97	DOUBLER-LH	1	
	0523400-96	DOUBLER-RH	1	
-28	0523406-3	SEGMENT-REAR SPAR OUTBOARD LH STA 100.0 TO 154.0	1	
	0523406-2	SEGMENT-REAR SPAR OUTBOARD RH STA 100.0 TO 154.0	1	
	0523005-50	SPAR ASSEMBLY-OUTBOARD AUXILIARY LH	1	
	0523005-51	SPAR ASSEMBLY-OUTBOARD AUXILIARY RH	1	
-29	0523813-3	FILLER-TRAILING EDGE	1	
-30	0523813-2	FILLER-TRAILING EDGE	1	
-31	0523813-4	FILLER-TRAILING EDGE	1	
-32	0523813-5	FILLER-TRAILING EDGE	1	
-33	0523216	REINFORCEMENT	2	
-34	0523215	REINFORCEMENT-WING LH	1	
	0523215-1	REINFORCEMENT-WING RH	1	

A---182 SERIAL 18262466 & ON
B---182 SERIAL 18262466 THRU 18262783
C---182 SERIAL 18262784 & ON

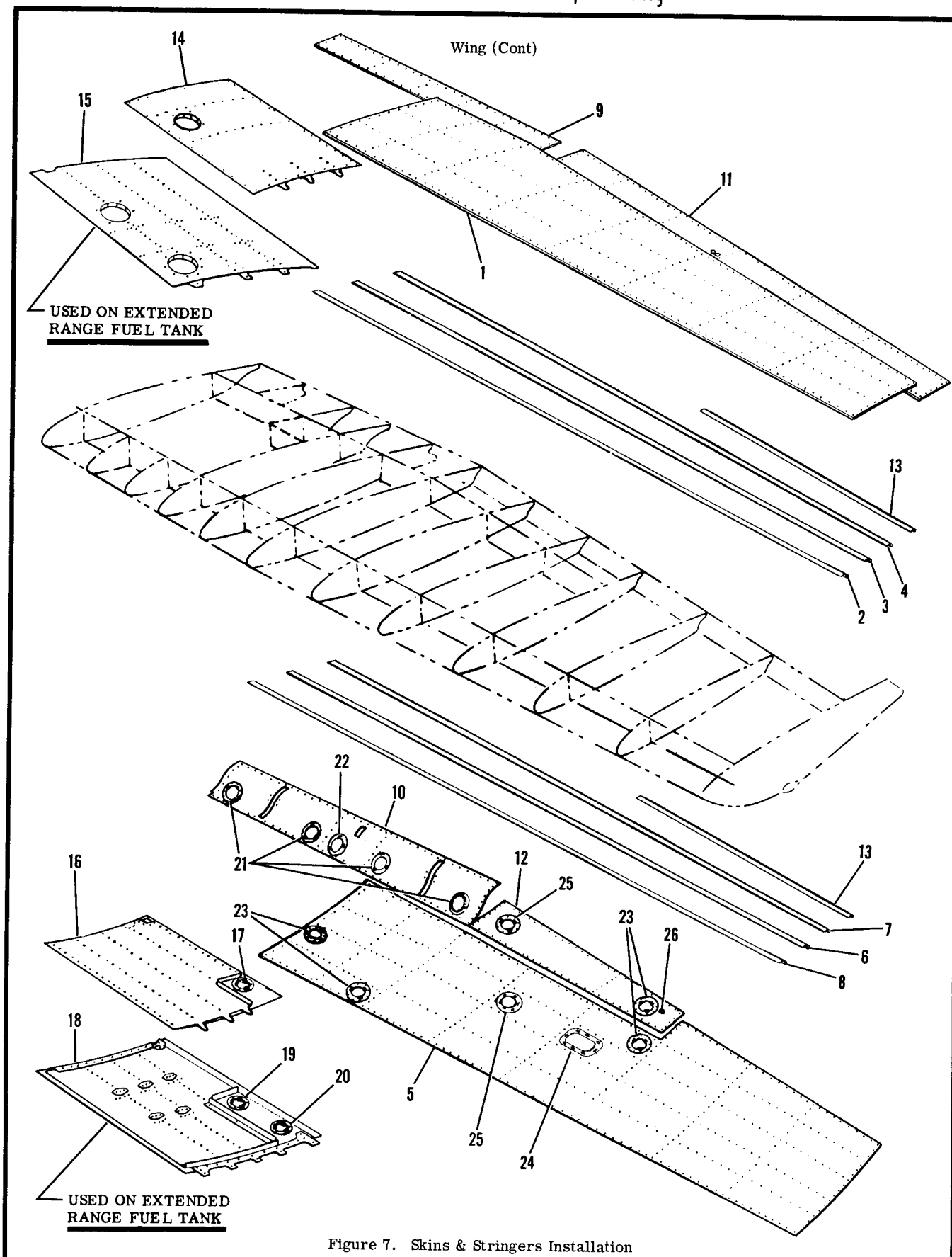

Figure 7. Skins & Stringers Installation

FIGURE AND INDEX NO.	PART NUMBER		DESCRIPTION	UNITS PER ASSY	USABLE ON CODE
			1 2 3 4 5 6 7		
7 -			SKINS & STRINGERS INSTALLATION-WING	NP	A
- 1	0722182-13		SKIN-UPPER STA 71.98 TO STA 208.00	1	
	0722182-16	*	SKIN-UPPER STA 85.625 TO STA 208.00	1	
- 2	0523541-43		STRINGER-WING UPPER LH	1	
	0523541-51	*	STRINGER-WING UPPER LH	1	
	0523541-44		STRINGER-WING UPPER RH	1	
	0523541-52	*	STRINGER-WING UPPER RH	1	
- 3	0523541-45		STRINGER-WING UPPER LH	1	
	0523541-53	*	STRINGER-WING UPPER LH	1	
	0523541-46		STRINGER-WING UPPER RH	1	
	0523541-54	*	STRINGER-WING UPPER RH	1	
- 4	0523541-47		STRINGER-WING UPPER LH	1	
	0523541-59	*	STRINGER-WING UPPER LH	1	
	0720612-2		STRINGER-WING UPPER RH	1	
	0523541-56	*	STRINGER-WING UPPER RH	1	
- 5	0722182-15		SKIN-LOWER LH STA 71.98 TO STA 208.00	1	
	0722182-17	*	SKIN-LOWER LH STA 85.625 TO STA 208.00	1	
	0722182-14		SKIN-LOWER RH STA 71.98 TO STA 208.00	1	
	0722182-17		SKIN-LOWER RH STA 85.625 TO STA 208.00	1	
- 6	0523541-46		STRINGER-WING LOWER LH	1	
	0523541-54	*	STRINGER-WING LOWER LH	1	
	0523541-45		STRINGER-WING LOWER RH	1	
	0523541-53	*	STRINGER-WING LOWER RH	1	
- 7	0523541-48		STRINGER-WING LOWER LH	1	
	0523541-60	*	STRINGER-WING LOWER LH	1	
	0720612-1		STRINGER-WING LOWER RH	1	
	0523541-55	*	STRINGER-WING LOWER RH	1	
- 8	0523541-50		STRINGER-WING LOWER LH	1	
	0523541-58	*	STRINGER-WING LOWER LH	1	
	0523541-49		STRINGER-WING LOWER RH	1	
	0523541-57	*	STRINGER-WING LOWER RH	1	
- 9	0720601-21		SKIN-UPPER TRAILING EDGE STA 23.625 TO 100.50	1	
-10	0720601-99		SKIN-LOWER TRAILING EDGE LH STA 23.625 TO 100.50	1	
			WEU 0720601-0101		
	0720601-101		SKIN-LOWER TRAILING EDGE RH STA 23.625 TO 100.50	1	
	0720601-98		SKIN-LOWER TRAILING EDGE RH STA 23.625 TO 100.50	1	
			WEU 0720601-100		
	0720601-100		SKIN-LOWER TRAILING EDGE RH STA 23.625 TO 100.50	1	
-11	0722182-19		SKIN-UPPER OUTBOARD TRAILING EDGE STA 100.50 TO STA 208.00	1	
-12	0722182-24		SKIN-LOWER OUTBOARD TRAILING EDGE STA 100.50 TO STA 154.00	2	
-13	0523003-40		STRINGER-WING	2	
-14	0722014-1		PANEL ASSEMBLY-WING FUEL WELL UPPER LH WEU 0722009-1	1	
	0722009-1		PANEL ASSEMBLY-WING FUEL WELL UPPER LH	1	
	0722014-21		PANEL ASSEMBLY-WING FUEL WELL UPPER RH WEU 0722009-2	1	
	0722009-2		PANEL ASSEMBLY-WING FUEL WELL UPPER RH	1	
-15	1220006-21	*	PANEL ASSEMBLY-WING FUEL WELL UPPER LH WEU 1222007-1	1	
	1222007-1	*	PANEL ASSEMBLY-WING FUEL WELL UPPER LH	1	
	1220006-22	*	PANEL ASSEMBLY-WING FUEL WELL UPPER RH WEU 1222007-2	1	
	1222007-2	*	PANEL ASSEMBLY-WING FUEL WELL UPPER RH	1	
-16	0722015-61		PANEL ASSEMBLY-WING FUEL WELL LOWER LH WEU 0722008-1	1	
	0722008-1		PANEL ASSEMBLY-WING FUEL WELL LOWER LH	1	
	0722015-60		PANEL ASSEMBLY-WING FUEL WELL LOWER RH WEU 0722008-2	1	
	0722008-2		PANEL ASSEMBLY-WING FUEL WELL LOWER RH	1	
-17	1222013-7		DOUBLER ASSY-ACCESS HOLE LH	1	
	1222013-8		DOUBLER ASSY-ACCESS HOLE RH	1	
	S1860-2A		NUTPLATE	6	
-18	1220007-63	*	PANEL ASSEMBLY-WING FUEL WELL LOWER LH WEU 1222008-1	1	
	1222008-1	*	PANEL ASSEMBLY-WING FUEL WELL LOWER LH	1	
	1220007-62	*	PANEL ASSEMBLY-WING FUEL WELL LOWER RH WEU 1222008-2	1	
	1222008-2	*	PANEL ASSEMBLY-WING FUEL WELL LOWER RH	1	
-19	1222013-7		DOUBLER ASSY-ACCESS HOLE LH	1	
	1222013-8		DOUBLER ASSY-ACCESS HOLE RH	1	
	S1860-2A		NUTPLATE	6	
-20	1220007-30		DOUBLER ASSEMBLY	1	
-21	S237-2		DOUBLER-INSPECTION OPENING	4	
-22	S237-2		DOUBLER-INSPECTION OPENING RH ONLY	1	
-23	S226-2		DOUBLER ASSEMBLY-INSPECTION OPENING	4	
	NAS444-4-3		NUTPLATE	3	
-24	1220095-3		DOUBLER ASSEMBLY	1	
-25	1222021-1		DOUBLER ASSEMBLY	2	
-26	CM2692-28-15		PLUG BUTTON 1 RH & 1 LH	2	

NOTE. *DENOTES PARTS USED ON WING WITH EXTENDED RANGE FUEL TANK.

A---182 SERIAL 18262466 & ON

Wing (Cont)

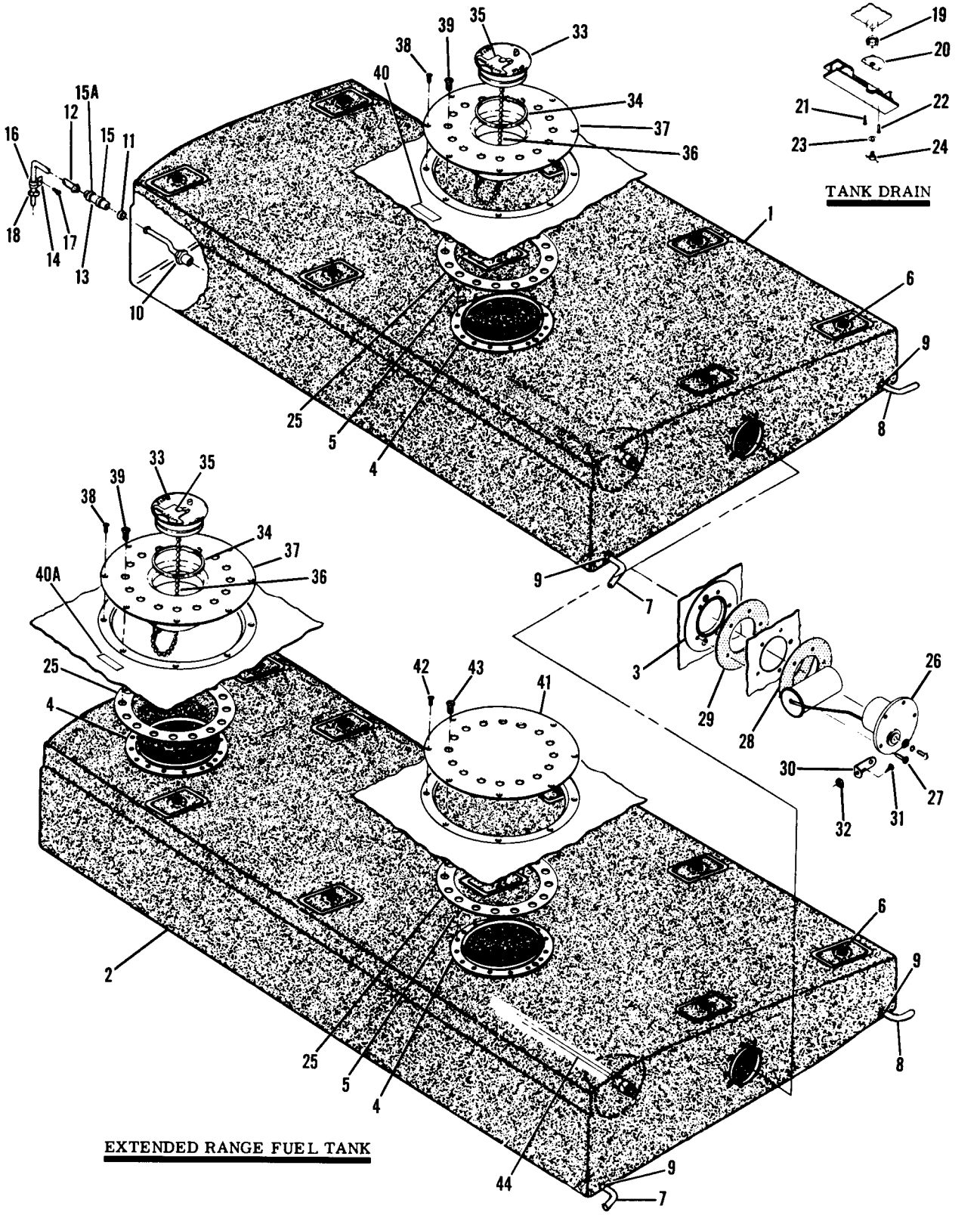

Figure 8. Fuel Tank Installation

FIGURE AND INDEX NO.	PART NUMBER		DESCRIPTION 1 2 3 4 5 6 7	UNITS PER ASSY	USABLE ON CODE
8 -			TANK INSTALLATION-FUEL LH	NP	A
			TANK INSTALLATION-FUEL RH	NP	A
- 1	0726001-18		TANK ASSEMBLY-FUEL RH	1	
	0726001-17		TANK ASSEMBLY-FUEL LH	1	
- 2	1200065-24	*	TANK ASSEMBLY-EXTENDED RANGE FUEL RH	1	
	1200065-23	*	TANK ASSEMBLY-EXTENDED RANGE FUEL LH	1	
- 3	0726001-3		RING ASSEMBLY-FUEL GAGE ADAPTER	1	
- 4	FCC-20068		FITTING USED IN U.S. RUBBER FUEL CELLS ONLY	1	
	FCC-20068	*	FITTING USED IN U.S. RUBBER FUEL CELLS ONLY	2	
			ATTACHING PARTS		
- 5	AN509-10R4		SCREW	2	
			---*---		
- 6	295055		FASTENER UC	8	
	295055	*	FASTENER UC	10	
- 7	0726603-16		STRAINER ASSEMBLY-FUEL TANK FORWARD	1	
- 8	0726003-14		STRAINER ASSEMBLY-FUEL TANK AFT	1	
- 9	S1891-10		CLAMP	4	
-10	0716125-2		VALVE ASSEMBLY-VENT LH ONLY	1	
			ATTACHING PARTS		
-11	NAS397-14		CLAMP	1	
			---*---		
-12	0716127-1		LINE ASSEMBLY-VENT LH	1	
			ATTACHING PARTS		
-13	S1495-8		HOSE 2.0 IN LG BULK ITEM REF S1495-8-2.00	1	
-14	0512006-1		ANGLE	1	
-15	AN737RM30		CLAMP	2	
-15A	NAS737RM30		CLAMP	1	
-16	S1486DG8U		CLAMP	2	
	S1486DG8U		CLAMP	1	
-17	S1021Z8-8		SCREW	2	
-18	MS35489-14		GROMMET	1	
			---*---		
-19	S1891-10		CLAMP	1	
-20	0322526-7		ADAPTER ASSEMBLY-FUEL TANK DRAIN	1	
			ATTACHING PARTS		
-21	AN515-8R8		SCREW	1	
-22	AN500A8-7		SCREW	1	
			---*---		
-23	MS28778-3		GASKET-DRAIN PLUG	1	B
-24	0320105		PLUG-FUEL TANK DRAIN	1	B
	SEE FIG 8A		VALVE-FUEL DRAIN USED WITH SAMPLER CUP	1	
-25	0726002-1		GASKET	1	
	0726002-1	*	GASKET	2	
-26	0726110-1		TRANSMITTER & FLOAT-FUEL	1	
			ATTACHING PARTS		
-27	AN520-10R10		SCREW	5	
			---*---		
-28	S1588-1		GASKET-FUEL TRANSMITTER	1	
-29	0726001-7		GASKET-FUEL TRANSMITTER	1	
-30	0413247		GROUND STRAP	1	
			ATTACHING PARTS		
-31	AN515-8R6		SCREW	1	
-32	MS21044N08		NUT	1	
			---*---		
-33	C156001-0106		CAP ASSY-FUEL	1	
-34	MS29513-338		O RING	1	
-35	4189		HANDLE WISO	1	
	4199		PIN-HANDLE WISO	1	
	MS29513-12		O RING	1	
-36	C156001-0104		CHAIN ASSY	1	

CONTINUED ON NEXT PAGE

FIGURE AND INDEX NO.	PART NUMBER		DESCRIPTION 1 2 3 4 5 6 7	UNITS PER ASSY	USABLE ON CODE
8 -37	0721306-1		ADAPTER ASSY	1	
			ATTACHING PARTS		
-38	AN509-10R6		SCREW	8	
-39	AN507-428R7		SCREW	16	
			---*---		
-40	0752023-1		PLACARD-STD RANGE	1	
-41	0752023-2		PLACARD-EXTENDED RANGE	1	
-42	1220022-3		PLATE-COVER	1	
			ATTACHING PARTS		
-43	AN509-10R6		SCREW	8	
-44	AN507-428R7		SCREW	16	
			---*---		
-45	0716614-6	*	VENT TUBE	1	

NOTE. *DENOTES PARTS USED ON WING WITH EXTENDED RANGE FUEL TANK

A---182 SERIAL 18262466 & ON
B---182 SERIAL 18262466 THRU 18263475

Wing (Cont)

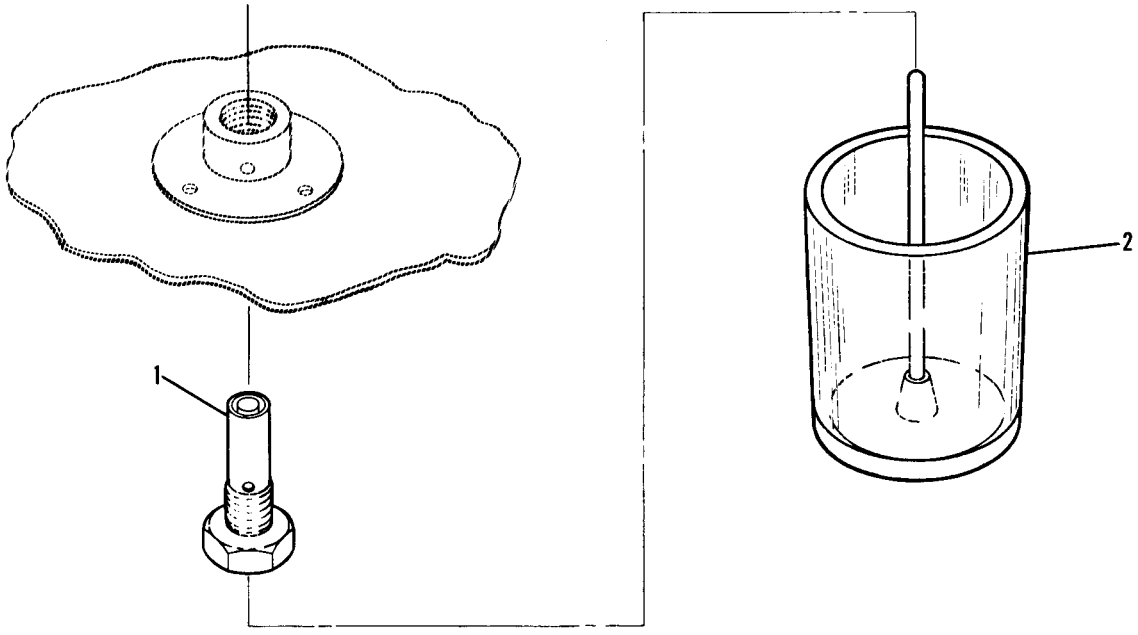

Figure 9. Fuel Tank Drain Valve Installation

FIGURE AND INDEX NO.	PART NUMBER		DESCRIPTION 1 2 3 4 5 6 7	UNITS PER ASSY	USABLE ON CODE
9 -			FUEL TANK DRAIN VALVE INSTALLATION	1	
- 1	S2106-1	*	DRAIN VALVE	2	
- 2	S2107-1	*	CUP-FUEL SAMPLER	1	
			NOTE. *THESE PARTS AND INSTALLATION INSTRUCTIONS ARE AVAILABLE AS A KIT & MAY BE ORDERED UNDER P/N AK180-77A		

Wing (Cont)

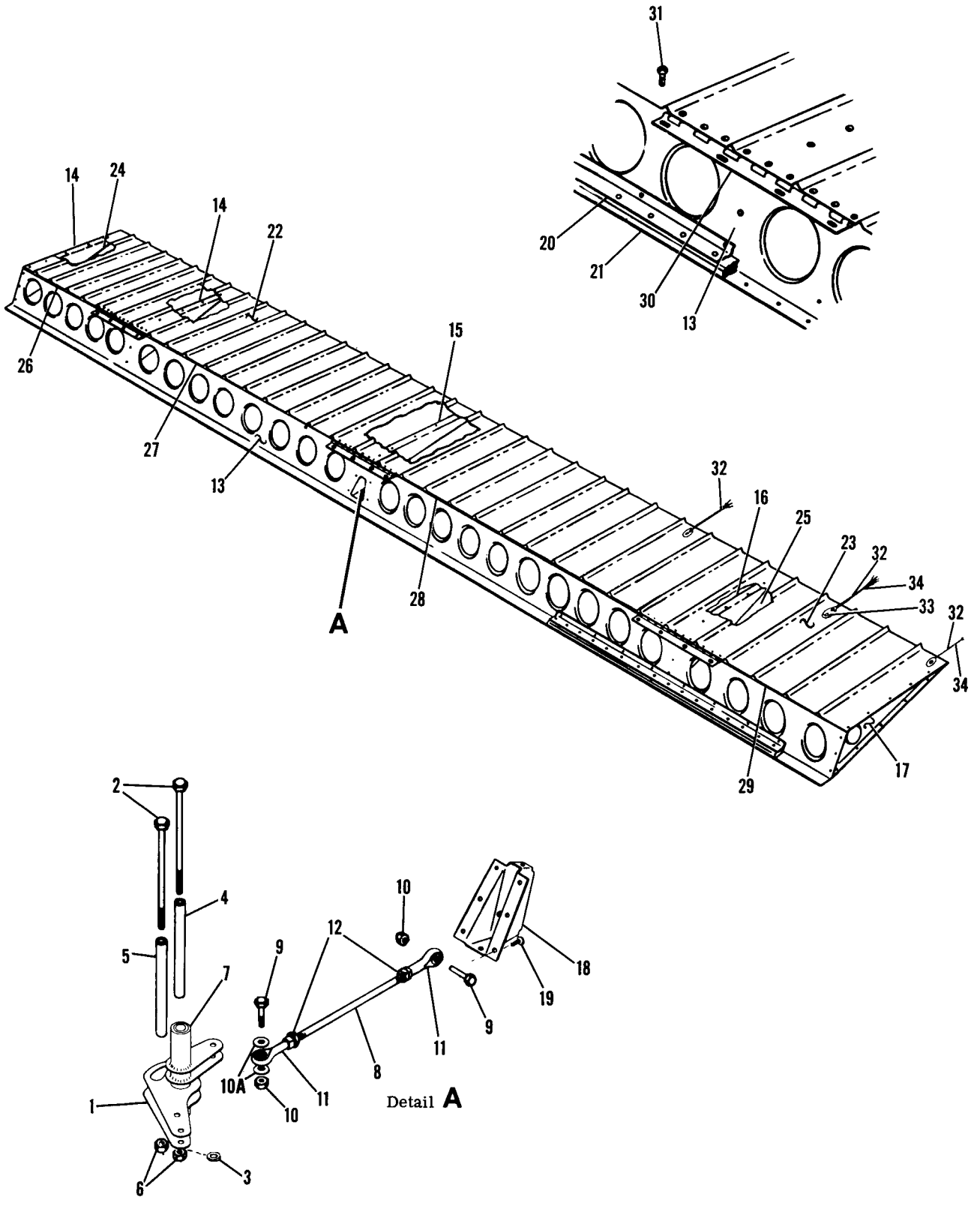

Figure 10. Aileron Installation

FIGURE AND INDEX NO.	PART NUMBER	DESCRIPTION 1 2 3 4 5 6 7	UNITS PER ASSY	USABLE ON CODE
10 -		AILERON INSTALLATION LH	NP	A
		AILERON INSTALLATION RH	NP	A
- 1	0760703-1	BELLCRANK-AILERON LH	1	
	0760703-2	BELLCRANK-AILERON RH	1	
	0760705-1	BELLCRANK-AILERON LH USED ON NAV-O-MATIC ONLY	1	
	0760705-2	BELLCRANK-AILERON RH USED ON NAV-O-MATIC ONLY	1	
- 2	AN4-42A	BOLT	2	
- 3	0522629	WASHER	2	
- 4	0523221	BUSHING	1	
- 5	0523222	BUSHING	1	
- 6	MS21042L4	NUT	2	
		---*---		
- 7	B610	BEARING TOR	2	
- 8	0523218	ROD ASSEMBLY-AILERON PUSH-PULL	1	
		ATTACHING PARTS		
- 9	AN3-7A	BOLT	2	
-10	MS21044N3	NUT	2	
-10A	AN960-10L	WASHER	2	
		---*---		
-11	S1819-3	ROD END	2	
-12	AN316-4R	NUT-CHECK	2	
	0523800-25	AILERON ASSY-LH	1	
	0523800-24	AILERON ASSY-RH	1	
-13	0523806	SPAR-AILERON LH	1	
	0523806-1	SPAR-AILERON RH	1	
-14	0523808	RIB NO 1-AILERON LH	2	
	0523808-2	RIB NO 1-AILERON RH	2	
-15	0523809	RIB NO 2-AILERON LH	1	
	0523809-1	RIB NO 2-AILERON RH	1	
-16	0523810	RIB NO 3-AILERON	1	
-17	0523811	RIB NO 4-AILERON RH	1	
	0523811-1	RIB NO 4-AILERON LH	1	
-18	0760011-2	BRACKET-AILERON CONTROL	1	
		ATTACHING PARTS		
-19	NAS455-163C4-8	RIVET	6	
		---*---		
-20	0523814-8	BRACKET-AILERON WEIGHT	1	
-21	0724115-1	WEIGHT-AILERON BALANCE	2	
	0724115-3	WEIGHT-AILERON BALANCE	1	
	0724115-4	WEIGHT-AILERON BALANCE	1	
-22	0523800-6	SKIN-AILERON UPPER INBOARD LH	1	
	0523800-7	SKIN-AILERON UPPER INBOARD RH	1	
-23	0523800-8	SKIN-AILERON UPPER OUTBOARD LH	1	
	0523800-9	SKIN-AILERON UPPER OUTBOARD RH	1	
-24	0523800-10	SKIN-AILERON LOWER INBOARD LH	1	
	0523800-11	SKIN-AILERON LOWER INBOARD RH	1	
-25	0523800-12	SKIN-AILERON LOWER OUTBOARD LH	1	
	0523800-13	SKIN-AILERON LOWER OUTBOARD RH	1	
-26	0523813-1	SPACER	1	
-27	0523813-8	SPACER	1	
-28	0523813-6	SPACER	1	
-29	0523813-7	SPACER	1	
-30	0523807	HINGE-AILERON	3	
		ATTACHING PARTS		
-31	NAS221-8	SCREW	12	
		---*---		
-32	C592001-0103	STATIC DISCHARGER	3	B
		ATTACHING PARTS		
	S1648-06K75	NUT	6	B
-33	AN515-6R10	SCREW	6	B
	AN936A6	WASHER	6	B
		---*---		
-34	C592001-0201	WICK-STATIC DISCHARGE	2	C

A---182 SERIAL 18262446 & ON
B---182 SERIAL 18262466 THRU 18264295
C---182 SERIAL 18264296 & ON

Wing (Cont)

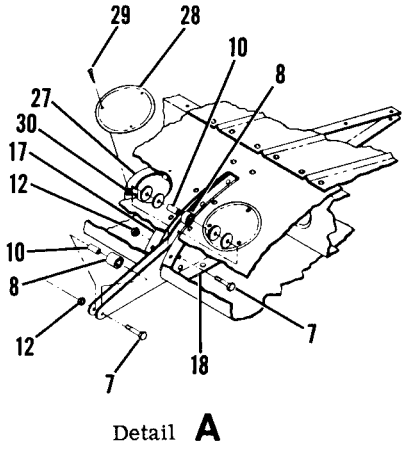

Detail A

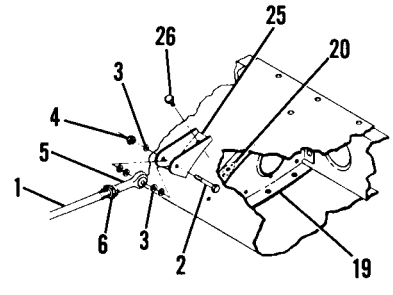

Detail B

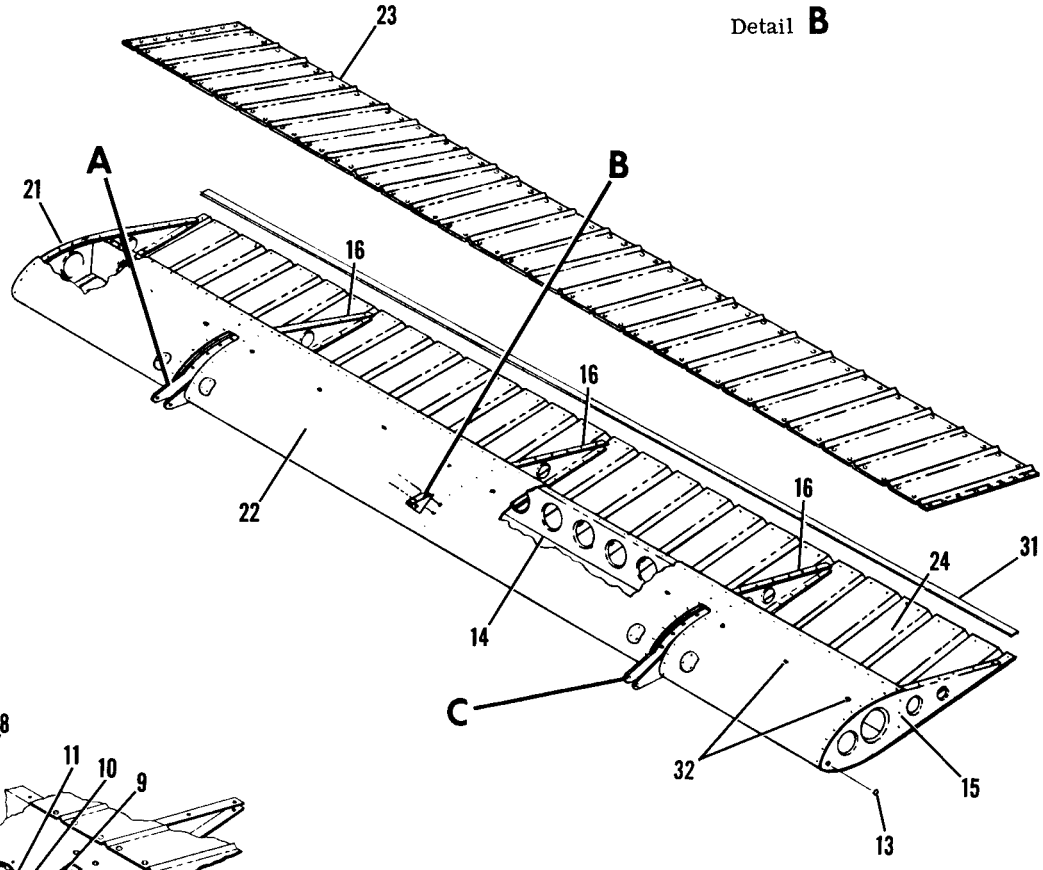

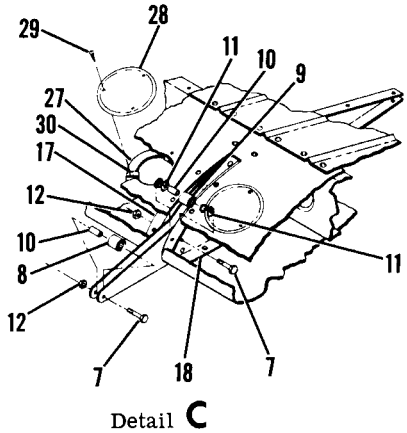

Detail C

Figure 11. Flap Installation

FIGURE AND INDEX NO.	PART NUMBER		DESCRIPTION 1 2 3 4 5 6 7	UNITS PER ASSY	USABLE ON CODE
11 -			FLAP INSTALLATION LH	NP	
			FLAP INSTALLATION RH	NP	
- 1	0523537		ROD ASSEMBLY-FLAP PUSH PULL	1	
			ATTACHING PARTS		
- 2	AN3-11A		BOLT	1	
- 3	AN960-10		WASHER	5	
- 4	MS21044N3		NUT	1	
			---*---		
- 5	S1106-3		ROD END	2	
- 6	AN316-4R		NUT-CHECK	2	
	0523901-33	*	FLAP ASSEMBLY-LH	1	
	0523901-34	*	FLAP ASSEMBLY-RH	1	
- 7	AN3-10A		BOLT	4	
- 8	0523921		ROLLER ASSEMBLY	3	
- 9	0523920		ROLLER ASSEMBLY	1	
-10	0523919		BUSHING	4	
-11	1220114-1		SPACER-FLAP OUTBOARD ROLLER ONLY	2	
-12	MS21044N3		NUT	4	
			---*---		
-13	CM2692-20-1S		PLUG BUTTON UC	1	
-14	0523911-2		SPAR-FLAP LH	1	
	0523911-3		SPAR-FLAP RH	1	
-15	0523912-1		RIB-FLAP RH END	1	
-16	0523923		RIB-FLAP TRAILING EDGE	3	
-17	0523901-13		RIB ASSEMBLY-FLAP SUPPORT ARM LH	2	
-18	0523901-14		RIB ASSEMBLY-FLAP SUPPORT ARM RH	2	
-19	0523914-2		RIB ASSEMBLY-FLAP LEADING EDGE CENTER	1	
-20	NAS680A3		NUTPLATE	2	
-21	0523912		RIB-FLAP LH END	1	
-22	0523901-17		SKIN-FLAP LEADING EDGE LH	1	
	0523901-18		SKIN-FLAP LEADING EDGE RH	1	
-23	0523901-21		SKIN-FLAP UPPER LH	1	
	0523901-22		SKIN-FLAP UPPER RH	1	
-24	0523901-19		SKIN-FLAP LOWER LH	1	
	0523901-20		SKIN-FLAP LOWER RH	1	
-25	0523918		BRACKET-FLAP CONTROL ATTACHMENT	1	
			ATTACHING PARTS		
-26	AN3-4A		BOLT	2	
			---*---		
-27	S237-4		DOUBLER-ACCESS OPENING	4	
-28	S225-3		PLATE-COVER	4	
			ATTACHING PARTS		
-29	S1021Z8-8		SCREW	12	
-30	NAS395-13-3		NUT	12	
			---*---		
-31	0523901-10		STIFFENER	1	
-32	S1093-1	**	PLUG BUTTON-ANTI FRICTION	14	

NOTE. *WHEN ORDERING THESE ASSEMBLIES ALSO ORDER PARTS MARKED **.--

Wing (Cont)

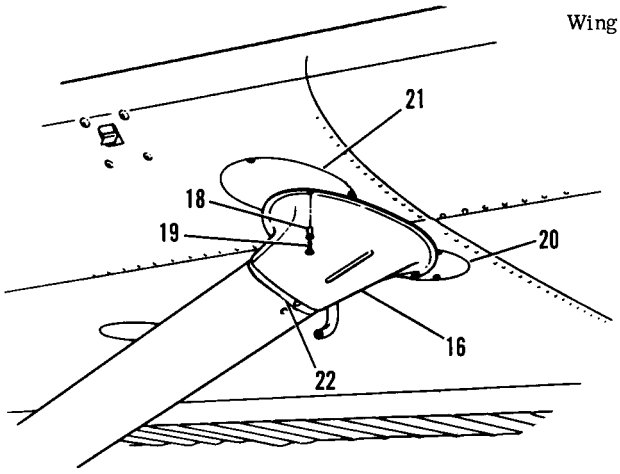

Detail A

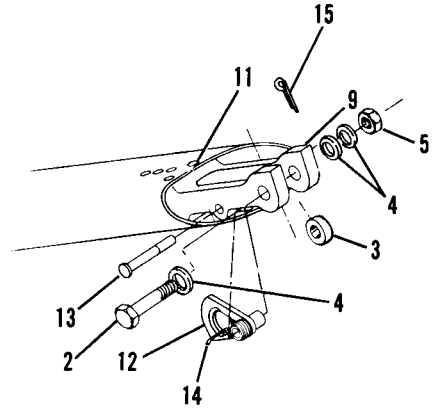

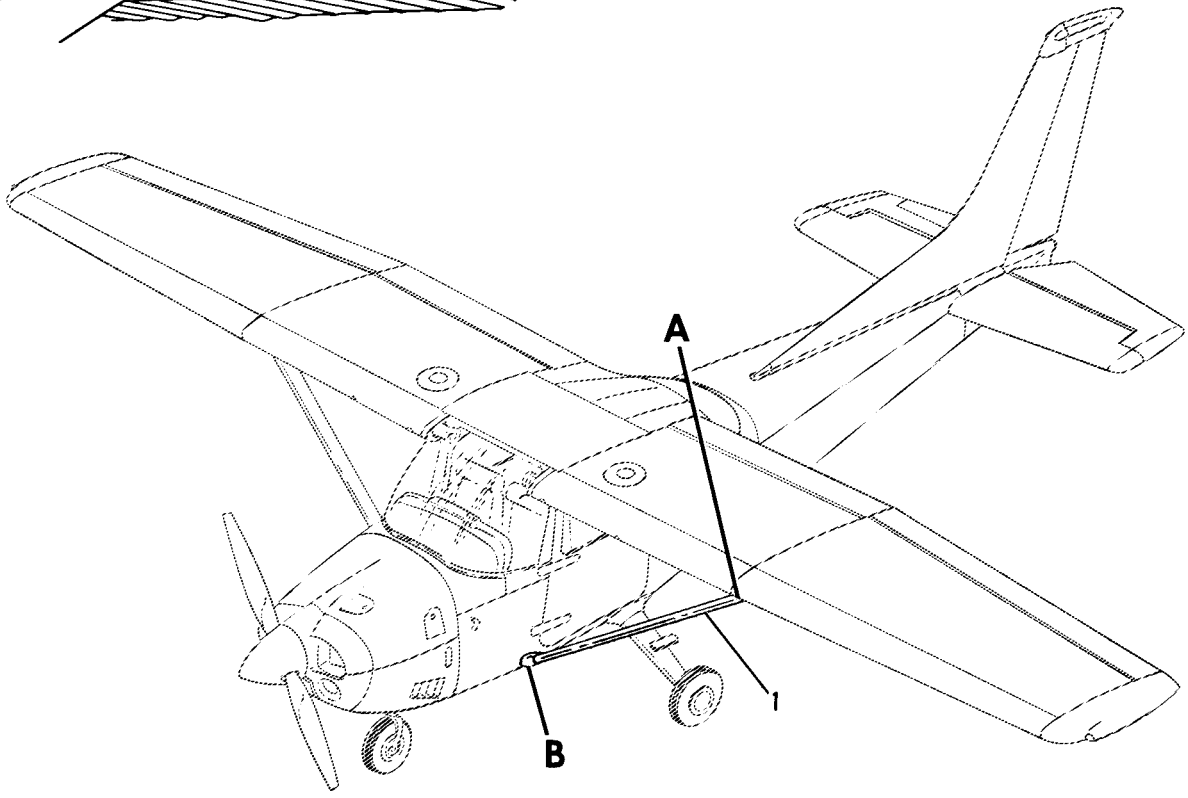

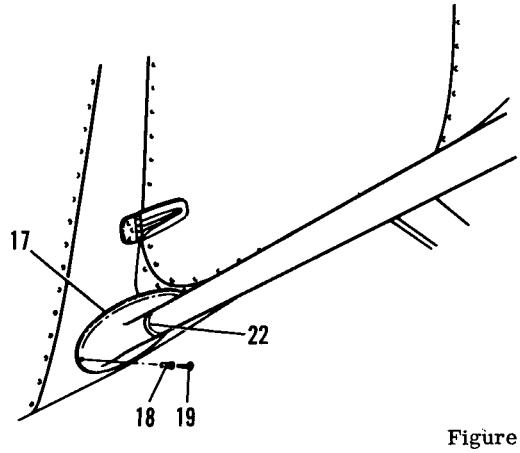

Detail B

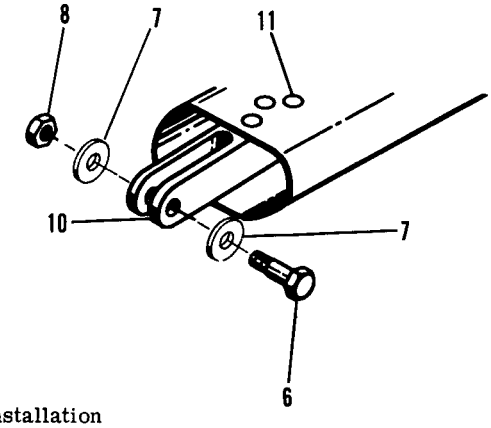

Figure 12. Wing Strut Installation

FIGURE AND INDEX NO.	PART NUMBER	DESCRIPTION 1 2 3 4 5 6 7	UNITS PER ASSY	USABLE ON CODE
12 -		STRUT INSTALLATION-WING	NP	
- 1	0723610-5	STRUT ASSY-LH	1	
	0723610-6	STRUT ASSY-RH	1	
		ATTACHING PARTS		
- 2	AN8-25A	BOLT	1	
- 3	0523307-2	SPACER	1	
- 4	AN960-816	WASHER	3	
- 5	MS20365-820C	NUT	1	
- 6	AN8-20A	BOLT	1	
- 7	AN960-816	WASHER	2	
- 8	MS20365-82C	NUT	1	
		---*---		
- 9	0523614-1	FITTING-WING STRUT UPPER	1	
-10	0723614-1	FITTING-WING STRUT LOWER	1	
		ATTACHING PARTS		
-11	MS20426AD10	RIVET	10	
	0723600-6	RIVET ALTERNATE	10	
		---*---		
-12	0523615-1	RING-MOORING	1	
		ATTACHING PARTS		
-13	MS20392-2C63	PIN	1	
-14	0523616-1	SPRING	1	
-15	MS24665-132	PIN-COTTER	1	
		---*---		
-16	0723605-3	FAIRING-UPPER LH	1	
	0723605-4	FAIRING-UPPER RH	1	
-17	0723612-3	FAIRING-LOWER LH	1	
	0723612-4	FAIRING-LOWER RH	1	
		ATTACHING PARTS		
-18	A08-75	RIVNUT GD	1	
-19	AN515-8R8	SCREW	3	
		---*---		
-20	0723605-9	PLATE ASSY-AFT LH	1	
	0723605-7	PLATE ASSY-AFT RH	1	
	A08-75	RIVNUT GD	1	
-21	0723605-8	PLATE ASSY-FWD LH	1	
	0723605-6	PLATE ASSY-FWD RH	1	
	A08-75	RIVNUT GD	1	
-22	Y8562	TAPE-POLYURETHANE 13.5 IN LG 8KI	AR	

Empennage (Cont)

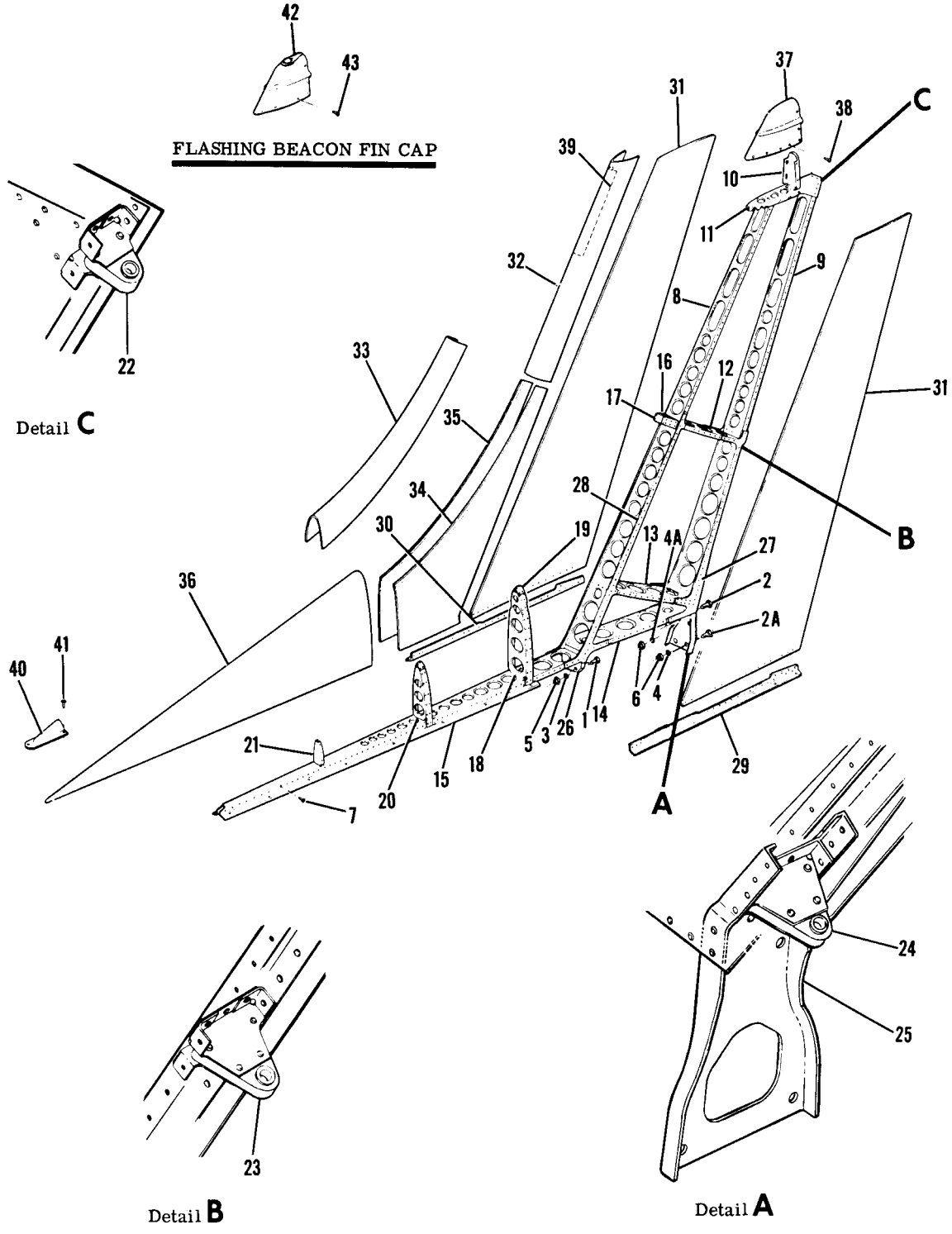

182 SERIAL 18262466 & ON

Figure 13. Fin & Dorsal Installation

FIGURE AND INDEX NO.	PART NUMBER	DESCRIPTION 1 2 3 4 5 6 7	UNITS PER ASSY	USABLE ON CODE
13 -		FIN & DORSAL INSTALLATION	NP	A
	1231057-1	FIN ASSEMBLY	1	B
	1213056-16	FIN ASSEMBLY	1	C
		ATTACHING PARTS		
- 1	AN4-6A	BOLT	4	
- 2	AN5-7A	BOLT	2	
- 2A	AN5-6A	BOLT	2	
- 3	AN960-416	WASHER	8	
- 4	AN960-516	WASHER	6	
- 5	MS21042L4	NUT	4	
- 6	MS21042L5	NUT	4	
- 7	AN525-832R7	SCREW	2	
		---*---		
- 8	1231002-3	SPAR-FIN FORWARD	1	
- 9	1231002-2	SPAR-FIN AFT	1	
-10	1231010-3	RIB ASSY-FIN TIP CAP	1	
	NAS696A08K	NUTPLATE	2	
	NAS697A08K	NUTPLATE	2	
-11	1231008-1	RIB ASSY-FIN UPPER	1	
	NAS698A08K	NUTPLATE	10	
	NAS680A06	NUTPLATE	1	
-12	1231007-1	RIB-FIN CENTER	1	
-13	1231006-1	RIB-FIN LOWER	1	
-14	1231005-3	RIB-FIN BASE AFT	1	
-15	1231049-1	RIB-FIN BASE FORWARD	1	
-16	1231009-1	RIB ASSY-LEADING EDGE CENTER	1	
-17	1231009-3	STRIP-LEADING EDGE	1	
-18	0731602-1	RIB-DORSAL STA 200.45	1	
-19	0731602-2	STRIP-LEADING EDGE	1	
-20	1231049-2	RIB-DORSAL STA 180.00	1	
-21	1231049-3	RIB-DORSAL STA 160.00	1	
-22	1231023-3	BRACKET ASSY-HINGE UPPER	1	
-23	1231023-2	BRACKET ASSY-HINGE CENTER	1	
-24	1231023-1	BRACKET ASSY-HINGE LOWER	1	
-25	1231058-1	FITTING-FIN ATTACH AFT	1	
-26	1231056-1	FITTING-FIN ATTACH FWD	1	
-27	1231014-2	PLATE-SPAR DOUBLER AFT	2	
-28	1231014-5	PLATE-SPAR DOUBLER FORWARD	2	
-29	0713604-7	FAIRING ASSY-DORSAL TO FUSELAGE AFT LH	1	
-30	0713604-8	FAIRING ASSY-DORSAL TO FUSELAGE AFT RH	1	
	A6196-8Z3	NUT TIN	1	
	A6195-8Z3	NUT TIN	4	
-31	1231000-18	SKIN-FIN	2	
-32	1231000-4	SKIN-FIN LEADING EDGE UPPER	1	
-33	1231000-17	SKIN-FIN LEADING EDGE LOWER	1	
-34	1231057-3	SKIN-FIN LH	1	
-35	1231057-4	SKIN-FIN RH	1	
-36	1231048-2	SKIN-DORSAL	1	
-37	0731606-1	CAP-FIN TIP	1	B
	0731606-10	CAP-FIN TIP	1	C
		ATTACHING PARTS		
-38	NAS220-6	SCREW	14	
		---*---		
-39	1231000-7	DOUBLER-LEADING EDGE SKIN	1	
-40	1231050-2	FAIRING-DORSAL FIN	1	
		ATTACHING PARTS		
-41	AN525-832R7	SCREW	4	
		---*---		
-42	1231059-1	FIN TIP ASSY-FLASHING BEACON	1	B
	1231064-1	FIN TIP ASSY-FLASHING BEACON	1	C
		ATTACHING PARTS		
-43	AN525-832R6	SCREW	14	
		---*---		
		A---182 SERIAL 18262466 & ON		
		B---182 SERIAL 18262466 THRU 18264295		
		C---182 SERIAL 18264296 & ON		

Empennage (Cont)

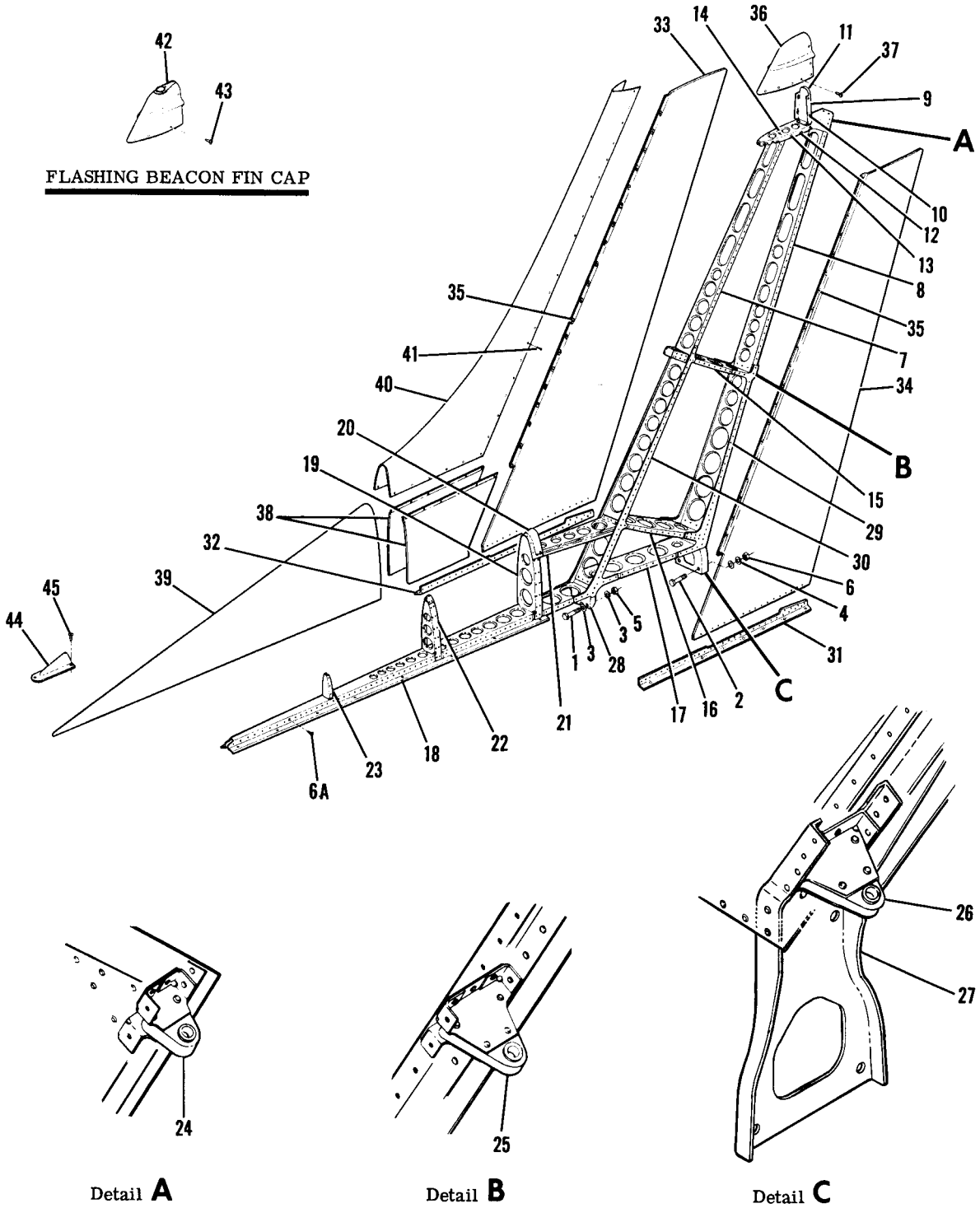

Detail **A** Detail **B** Detail **C**

182 SERIAL 18263476 & ON

Figure 13A. Fin & Dorsal Installation - VHF Comm Antenna

FIGURE AND INDEX NO.	PART NUMBER	DESCRIPTION 1 2 3 4 5 6 7	UNITS PER ASSY	USABLE ON CODE
13A-		FIN & DORSAL INSTALLATION-VFH COMM ANTENNA	NP	A
	1231057-15	FIN ASSY-VHF COMM ANTENNA	1	B
	1231057-17	FIN ASSY-VHF COMM ANTENNA	1	C
		ATTACHING PARTS		
- 1	AN4-6A	BOLT FWD ATTACH	4	
- 2	AN5-7A	BOLT LOWER AFT ATTACH	2	
	AN5-6A	BOLT UPPER AFT ATTACH	2	
- 3	AN960-416	WASHER FWD	8	
- 4	AN960-516	WASHER AFT	8	
- 5	MS21042L4	NUT FWD	4	
- 6	MS21042L5	NUT AFT	4	
- 6A	AN525-832R7	SCREW	2	
		---*---		
- 7	1231002-3	SPAR-FIN FWD	1	
- 8	1231002-2	SPAR-FIN AFT	1	
- 9	1231010-3	RIB ASSY-FIN TIP CAP	1	
-10	NAS697A08K	NUT PLATE	2	
-11	NAS696A08K	NUT PLATE	2	
-12	1231062-5	RIB ASSY-FIN UPPER	1	
-13	NAS698A08K	NUTPLATE	10	
-14	NAS680A06	NUTPLATE	1	
-15	1231007-1	RIB-FIN CENTER	1	
-16	1231006-1	RIB-FIN LOWER	1	
-17	1231005-3	RIB-FIN BASE AFT	1	
-18	1231049-1	RIB-FIN BASE FWD	1	
-19	1231060-1	RIB-DORSAL STA 200.45	1	
-20	1231060-3	STRIP-ADAPTER STA. 200.45	1	
-21	1231063-1	RIB ASSY-FIN	1	
	NAS686A08K	NUTPLATE	12	
-22	1231049-2	RIB-DORSAL STA. 180.00	1	
-23	1231049-3	RIB-DORSAL STA. 160.00	1	
-24	1231023-3	BRACKET ASSY-HINGE UPPER	1	
-25	1231023-2	BRACKET ASSY-HINGE CENTER	1	
-26	1231023-1	BRACKET ASSY-HINGE LOWER	1	
-27	1231058-1	FITTING-FIN ATTACH AFT	1	
-28	1231056-1	FITTING-FIN ATTACH FWD	1	
-29	1231014-2	PLATE-SPAR DOUBLER AFT	2	
-30	1231014-4	PLATE-SPAR DOUBLER FWD WEU 1231014-5	2	
	1231014-5	PLATE-SPAR DOUBLER FWD	2	
-31	0731604-7	FAIRING ASSY-DORSAL TO FUSELAGE AFT LH	1	
-32	0731604-8	FAIRING ASSY-DORSAL TO FUSELAGE AFT RH	1	
	A6196-8Z3	NUTPLATE	1	
	A6195-8Z3	NUTPLATE	4	
-33	1231057-11	SKIN ASSY RH-FIN	1	
-34	1231057-12	SKIN ASSY LH-FIN	1	
-35	NAS686A08K	NUTPLATE	19	
-36	0731606-1	CAP-FIN TIP	1	B
	0731606-10	CAP-FIN TIP	1	C
		ATTACHING PARTS		
-37	AN525-832R6	SCREW	14	
		---*---		
-38	1231057-9	SKIN-FIN	2	
-39	1231057-10	SKIN-DORSAL	1	
-40	1270718-201	ANTENNA ASSY-VHF COMM	1	
		ATTACHING PARTS		
-41	AN507-832R7	SCREW	50	
		---*---		
-42	1231059-1	FIN TIP ASSY-FLASHING BEACON	1	B
	1231064-1	FIN TIP ASSY-FLASHING BEACON	1	C
		ATTACHING PARTS		
-43	AN525-832R6	SCREW	14	
		---*---		
-44	1231050-2	FAIRING-DORSAL FIN	1	
		ATTACHING PARTS		
-45	AN525-832R7	SCREW	4	
		---*---		

NOTE. *FOR STANDARD FIN ASSY-SEE FIGURE 13.

A---182 SERIAL 18263476 & ON
B---182 SERIAL 18263476 THRU 18264295
C---182 SERIAL 18264296 & ON

Empennage (Cont)

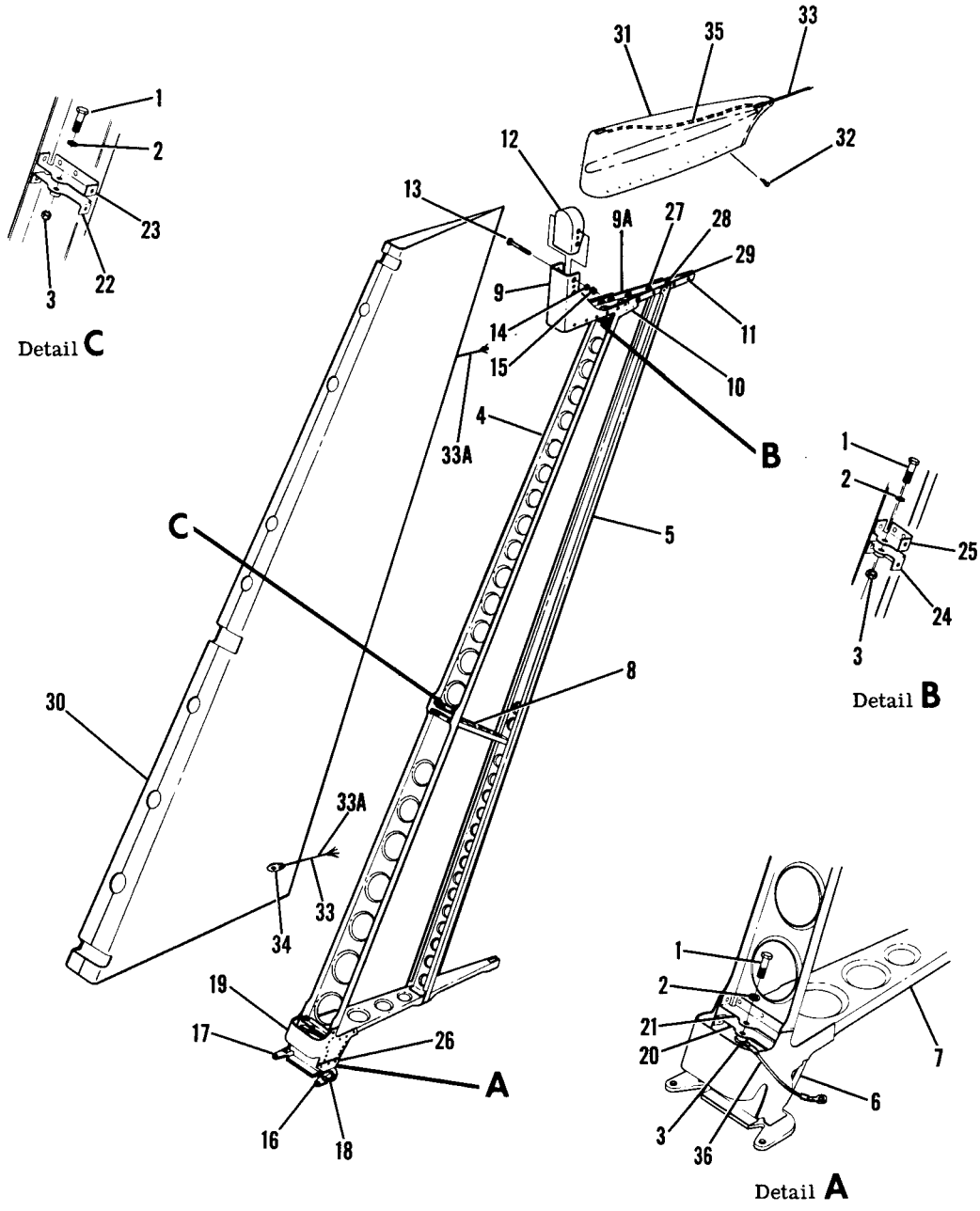

Figure 14. Rudder Assembly

FIGURE AND INDEX NO.	PART NUMBER	DESCRIPTION 1 2 3 4 5 6 7	UNITS PER ASSY	USABLE ON CODE
14 -	1231001-11	RUDDER ASSEMBLY-SWEPT BACK	1	A
	1231001-13	RUDDER ASSEMBLY-SWEPT BACK	1	B
		ATTACHING PARTS		
- 1	AN4-11A	BOLT	3	
- 2	AN960-416	WASHER	3	
- 3	MS21042L4	NUT	3	
		---*---		
- 4	1231015-1	SPAR-FORWARD	1	
- 5	1231015-2	SPAR-REAR	1	
- 6	1231015-3	SPAR-BELLCRANK	1	
- 7	1231016-1	RIB-LOWER	1	
- 8	1231017-1	RIB-CENTER	1	
- 9	1231033-1	RIB ASSEMBLY-RUDDER TIP	1	
	NAS697A08	NUTPLATE	2	
	NAS680A08	NUTPLATE	4	
- 9A	1231031-1	RIB TIP ASSY-FWD	1	
	NAS680A08K	NUTPLATE	8	
-10	1231029-1	BRACKET-AFT LH	1	
	1231029-2	BRACKET-AFT RH	1	
-11	1231032-1	RIB-TIP AFT	1	
-12	0733104-2	WEIGHT-RUDDER BALANCE	1	
		ATTACHING PARTS		
-13	AN509-10R31	SCREW	3	
-14	AN960-10	WASHER	3	
-15	MS21044N3	NUT	3	
		---*---		
-16	1231021-9	BELLCRANK ASSEMBLY-RUDDER	1	
-17	1231021-8	SUPPORT-RH	1	
	0733113-1	TEE CLIP	1	
-18	1231021-7	SUPPORT-LH	1	
	0733113-1	TEE CLIP	1	
	0733103-1	BUSHING-BELLCRANK	2	
-19	1231022-1	GUSSET-BELLCRANK	1	
-20	1231023-16	BRACKET-LOWER RUDDER HINGE	1	
-21	1231023-19	BRACKET-LOWER RUDDER HINGE	1	
-22	1231023-17	BRACKET-CENTER RUDDER HINGE	1	
-23	1231023-20	BRACKET-CENTER RUDDER HINGE	1	
-24	1231023-18	BRACKET-UPPER RUDDER HINGE	1	
-25	1231023-21	BRACKET-UPPER RUDDER HINGE	1	
-26	1231026-1	CLIP-BELLCRANK LH	1	
	1231026-2	CLIP-BELLCRANK RH	1	
-27	NAS696A08K	NUTPLATE	4	
-28	NAS697A08K	NUTPLATE	2	
-29	NAS698A08K	NUTPLATE	1	
-30	1231001-3	SKIN-RUDDER	1	
-31	0731606-6-791	CAP-RUDDER TIP	1	A
	0731606-9-791	CAP-RUDDER TIP	1	B
		ATTACHING PARTS		
-32	NAS220-6	SCREW	12	
	NAS220-8	SCREW	8	
		---*---		
-33	C592001-0103	WICK-STATIC DISCHARGE	2	A
-33A	C592001-0201	WICK-STATIC DISCHARGE	2	B
		ATTACHING PARTS		
	NAS1329A06K-120	NUT ATTACH TO RUDDER CAP	2	A
	S1648-06K75	NUT ATTACH TO RUDDER ASSY	6	A
	S1648-06K75	NUT ATTACH TO RUDDER ASSY	4	B
	AN515-6R10	SCREW ATTACH TO RUDDER ASSY	4	B
	MS35333-37	WASHER ATTACH TO RUDDER ASSY	4	B
-34	AN515-6R6	SCREW ATTACH TO RUDDER CAP	2	A
	AN515-6R10	SCREW ATTACH TO RUDDER ASSY	6	A
	AN515-6R10	SCREW ATTACH TO RUDDER ASSY	4	B
	AN960A6	WASHER ATTACH TO RUDDER CAP	2	A
	AN936D6	WASHER ATTACH TO RUDDER ASSY	6	A
	MS35333-37	WASHER ATTACH TO RUDDER ASSY	4	B
		---*---		
-35	1570102-8	STRAP ASSY	1	
	AN960A3	WASHER	2	
-36	1570102-8	STRAP ASSY	1	A
	1570102-12	STRAP ASSY	1	B

A---182 SERIAL 18262466 THRU 18264295
B---182 SERIAL 18264296 & ON

Empennage (Cont)

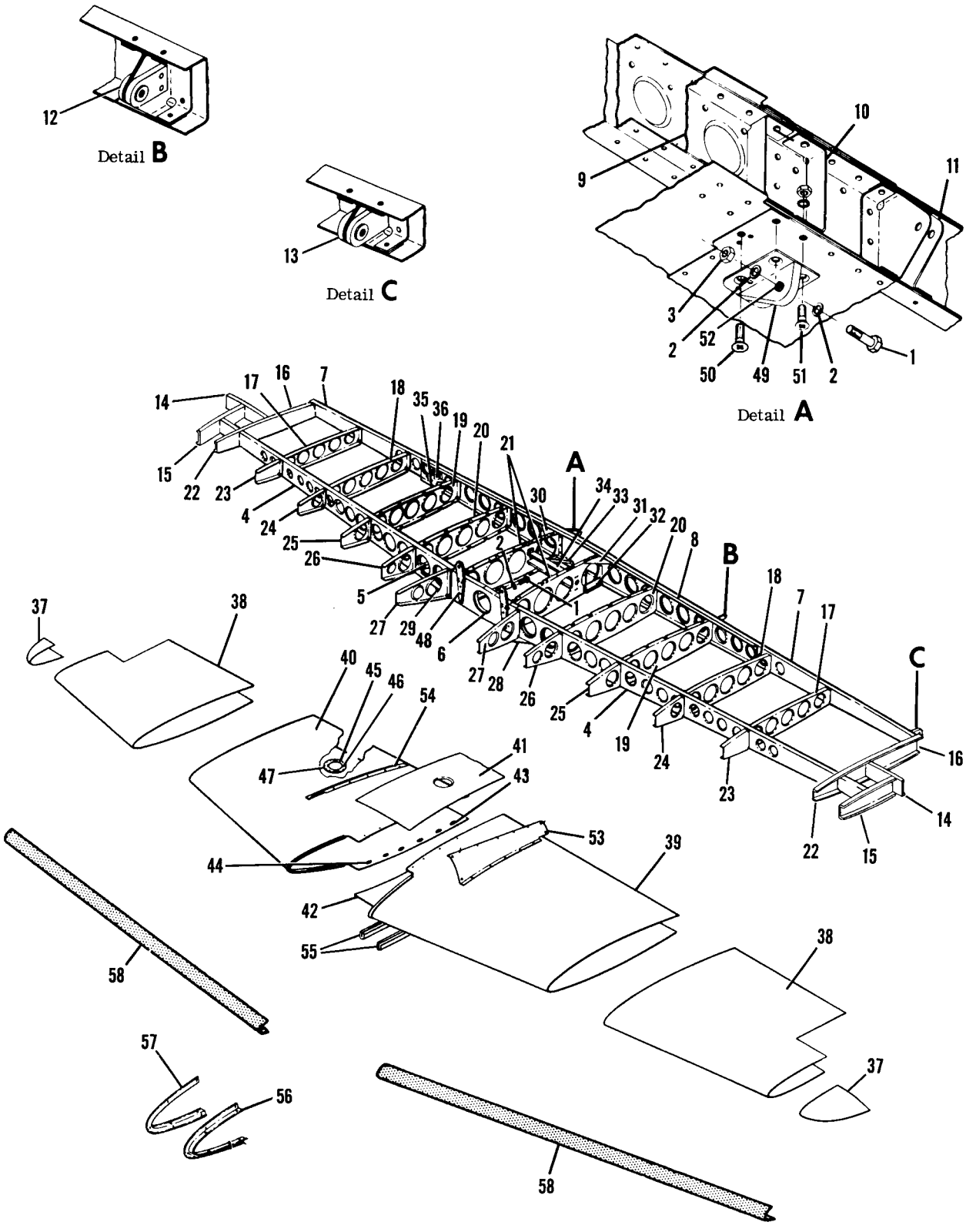

Figure 15. Stabilizer Installation

FIGURE AND INDEX NO.	PART NUMBER	DESCRIPTION 1 2 3 4 5 6 7	UNITS PER ASSY	USABLE ON CODE
15 -		STABILIZER INSTALLATION	NP	A
	1232600-7	STABILIZER ASSEMBLY	1	
		ATTACHING PARTS		
- 1	AN4-11A	BOLT	4	
- 2	AN960-416	WASHER	6	
- 3	MS21042L4	NUT	2	
		---*---		
	1232610-2	SPAR ASSEMBLY-STABILIZER FRONT	1	
- 4	1232610-4	SPAR-FRONT	2	
- 5	1232605-1	SPLICE	1	
- 6	1232116	CHANNEL	1	
	1232610-1	SPAR ASSEMBLY-STABILIZER REAR	1	
- 7	1232610-3	SPAR-REAR	2	
- 8	1232114-1	CHANNEL	1	
- 9	0732603-2	CHANNEL	1	
-10	0732101-4	REINFORCEMENT	2	
-11	0732100-6	BRACKET-HINGE INBOARD	2	
-12	0732100-7	BRACKET ASSEMBLY-HINGE CENTER	2	
-13	1234626-1	BRACKET ASSEMBLY HINGE OUTBOARD	1	
-14	1232602-1	RIB-STABILIZER LATERAL	2	
-15	1232601-1	RIB-STABILIZER TIP STA. 66.193	2	
-16	1232603-1	RIB-STABILIZER STA. 61.063	2	
-17	0732610-5	RIB-STABILIZER STA. 50.375	2	
-18	0732610-6	RIB-STABILIZER STA. 38.875	2	
-19	1232108-1	RIB-STABILIZER STA. 27.375	2	
-20	1232105	RIB-STABILIZER STA. 16.000	2	
-21	1232106	RIB-STABILIZER CANTED	2	
-22	1232603-2	RIB-STABILIZER NOSE STA. 61.063	2	
-23	0732611-1	RIB-STABILIZER NOSE STA. 50.375	2	
-24	0732611-2	RIB-STABILIZER NOSE STA. 38.875	2	
-25	0732611-3	RIB-STABILIZER NOSE STA. 27.375	2	
-26	0732611-4	RIB-STABILIZER NOSE STA. 16.000	2	
-27	0732611-6	RIB-STABILIZER NOSE CANTED	2	
-28	1232118-1	DOUBLER-STABILIZER LOWER LH & UPPER RH FORWARD	2	
-29	1232118-2	DOUBLER-STABILIZER UPPER LH & LOWER RH FORWARD	2	
-30	1232606-1	DOUBLER-STABILIZER LOWER LH & UPPER RH AFT	2	
-31	1232606-2	DOUBLER-STABILIZER UPPER LH & LOWER RH AFT	2	
-32	0732106-1	REINFORCEMENT-STABILIZER LH AFT	1	
-33	0732106	REINFORCEMENT-STABILIZER RH AFT	1	
-34	1232140-1	BRACKET-TRIM TAB PULLEY	1	
-35	1232139-1	BRACKET ASSEMBLY-TRIM TAB ACTUATOR	1	
	NAS696A3	NUTPLATE	4	
	NAS697A3	NUTPLATE	1	
-36	1234023-1	BRACE-TRIM TAB ACTUATOR	1	
		ATTACHING PARTS		
	NAS221-13	SCREW	3	
	AN960-10	WASHER	2	
		---*---		
-37	1232604-1	TIP-STABILIZER	2	
-38	1232600-2	SKIN-STABILIZER OUTBOARD	2	
-39	1232600-3	SKIN-STABILIZER INBOARD LH	1	
-40	1232600-4	SKIN-STABILIZER INBOARD RH	1	
-41	1232600-19	SKIN ASSY-STABILIZER CENTER UPPER	1	
	MS21044N08	NUTPLATE	4	
-42	0732600-3	SKIN-STABILIZER CENTER LOWER	1	
-43	S1863-3A	NUT TIN	2	
-44	S1862-2A	NUT TIN	1	
-45	1232142-1	DOUBLER-INSPECTION HOLE	1	
-46	NAS395-14-3	NUT	4	
-47	1232141-1	PLATE-INSPECTION HOLE	1	
		ATTACHING PARTS		
	S1021Z8-8	SCREW	4	
		---*---		

CONTINUED ON NEXT PAGE

FIGURE AND INDEX NO.	PART NUMBER	DESCRIPTION 1 2 3 4 5 6 7	UNITS PER ASSY	USABLE ON CODE
15 -48	0732601-3	FITTING-STABILIZER ATTACH FORWARD	2	
-49	1232400-1	HINGE ASSEMBLY-STABILIZER ATTACH AFT LH	1	
	1232400-2	HINGE ASSEMBLY-STABILIZER ATTACH AFT RH	1	
		ATTACHING PARTS		
-50	AN509-416R12	SCREW	2	
-51	AN509-416R13	SCREW	4	
	AN960-416	WASHER	6	
	MS21042L4	NUT	6	
		---*---		
-52	1232143-1	BUSHING	1	
-53	0732615-5	FAIRING-STABILIZER UPPER LH	1	
-54	0732615-6	FAIRING-STABILIZER UPPER RH	1	
		ATTACHING PARTS		
	S1021Z8-8	SCREW	13	
	NAS395-10-3	NUT	2	
	AN525-832R7	SCREW	2	
		---*---		
-55	S202R1750B	CHANNEL	2	
-56	0732614-1	FAIRING-STABILIZER FORWARD LH	1	
-57	0732614-2	FAIRING-STABILIZER FORWARD RH	1	
		ATTACHING PARTS		
	S1021Z8-8	SCREW	3	
		---*---		
-58	S1938-3	BOOT-ABRASION 68.00 IN LG	2	
		A---182 SERIAL 18262466 & ON		

FIGURE AND INDEX NO.	PART NUMBER	DESCRIPTION 1 2 3 4 5 6 7	UNITS PER ASSY	USABLE ON CODE
16 -		ELEVATOR INSTALLATION	NP	A
	1234600-1	ELEVATOR ASSEMBLY-LH	1	
	1234600-2	ELEVATOR ASSEMBLY-RH	1	
		ATTACHING PARTS		
- 1	AN4-11A	BOLT	2	
- 2	AN960-416	WASHER	2	
- 3	MS21042L4	NUT	2	
		---*---		
	1234602-1	SPAR ASSEMBLY-ELEVATOR LH	1	
	1234602-2	SPAR ASSEMBLY-ELEVATOR RH	1	
- 4	1234602-3	CHANNEL-LH	1	
- 5	1234602-4	CHANNEL-RH	1	
	0734110-1	TORQUE TUBE ASSEMBLY-LH	1	
	0734110-2	TORQUE TUBE ASSEMBLY-RH	1	
- 6	0734102-2	PLATE-TORQUE TUBE END	1	
- 7	0734110-5	RIB-INBOARD LH	1	
- 8	0734110-6	RIB-INBOARD RH	1	
- 9	0734110-3	ADAPTER-RIB INBOARD LH	1	
-10	0734110-4	ADAPTER-RIB INBOARD RH	1	
-11	0734102-7	RIB-OUTBOARD	1	
-12	0734102-8	ADAPTER-RIB OUTBOARD	1	
-13	0734110-7	TUBE-TORQUE	1	
-14	0734602-2	RIB-ELEVATOR LH STA. 27.563	1	
-15	0734602-5	RIB-ELEVATOR RH STA. 27.563	1	
-16	0734602-3	RIB-ELEVATOR LH STA. 39.171	1	
-17	0734602-6	RIB-ELEVATOR RH STA. 39.171	1	
-18	0734602-4	RIB-ELEVATOR LH STA. 50.090	1	
-19	1234612-1	RIB-ELEVATOR RH STA. 50.090	1	
-20	1234604-1	RIB-ELEVATOR LH STA. 61.063	1	
-21		DELETED		
-22	1234603-1	RIB-ELEVATOR LH STA. 61.983	1	
-23	1234603-2	RIB-ELEVATOR RH STA. 61.983	1	
-24	1234601-1	RIB-ELEVATOR LH STA. 66.193	1	
-25	1234601-2	RIB-ELEVATOR RH STA. 66.193	1	

CONTINUED ON NEXT PAGE

Empennage (Cont)

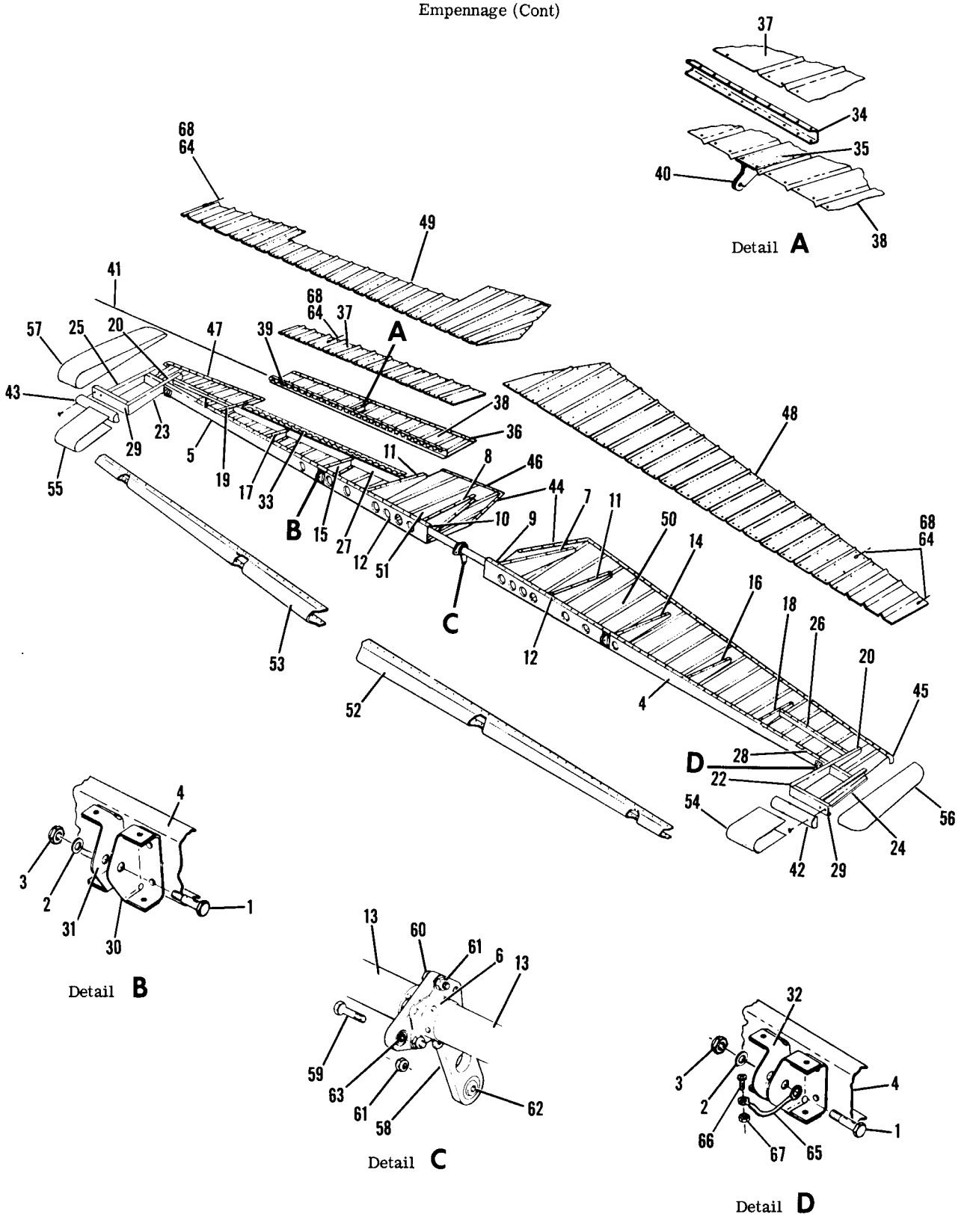

Figure 16. Elevator Installation

FIGURE AND INDEX NO.	PART NUMBER	DESCRIPTION 1 2 3 4 5 6 7	UNITS PER ASSY	USABLE ON CODE
16 -26	0734605-1	STIFFENER	2	
-27	1234614-1	CHANNEL-ELEVATOR TRIM TAB RH	1	
-28	1234607-1	CHANNEL-ELEVATOR SPAR REINFORCEMENT	1	
-29	1234606-1	CHANNEL ASSEMBLY-ELEVATOR WEIGHT SUPPORT	1	
	NAS680A3	NUT PLATE	2	
-30	0732100-4	BRACKET-ELEVATOR HINGE INBOARD STA. 26.625	1	
-31	0732100-10	BRACKET-ELEVATOR HINGE OUTBOARD STA. 26.625	1	
-32	1234630-1	BRACKET ASSEMBLY-ELEVATOR HINGE STA. 60.810	1	
-33	1234600-12	HINGE HALF-ELEVATOR TRIM TAB RH ONLY	1	
	1234613-1	TRIM TAB ASSEMBLY-ELEVATOR RH ONLY	1	
-34	1234610-1	SPAR-TRIM TAB	1	
-35	1234611-1	SPACER-TRIM TAB	1	
-36	1234613-4	SPACER-TRIM TAB	1	
-37	1234613-2	SKIN-TRIM TAB UPPER	1	
-38	1234613-3	SKIN-TRIM TAB LOWER	1	
-39	1234613-5	HINGE HALF-TRIM TAB	1	
-40	0734603-1	HORN ASSEMBLY-TRIM TAB	1	
-41	MS20253-2-4046	PIN-TRIM TAB HINGE RH ONLY	1	
-42	1234605-5	BALANCE WEIGHT-ELEVATOR LH	1	
-43	1234605-6	BALANCE WEIGHT-ELEVATOR RH	1	
		ATTACHING PARTS		
	AN3-10A	BOLT	1	
	AN509-10R23	SCREW	1	
	AN960-10L	WASHER	1	
		---*---		
-44	0734600-8	SPACER-ELEVATOR INBOARD	1	
-45	1234600-13	SPACER-ELEVATOR TRAILING EDGE LH	1	
-46	0734600-17	SPACER-ELEVATOR TRAILING EDGE INBOARD RH	1	
-47	1234600-14	SPACER-ELEVATOR TRAILING EDGE OUTBOARD RH	1	
-48	1234600-5	SKIN-ELEVATOR UPPER LH	1	
-49	1234600-6	SKIN-ELEVATOR UPPER RH	1	
-50	1234600-7	SKIN-ELEVATOR LOWER LH	1	
-51	1234600-8	SKIN-ELEVATOR LOWER RH	1	
-52	1234600-15	SKIN-ELEVATOR NOSE LH	1	
-53	1234600-16	SKIN-ELEVATOR NOSE RH	1	
-54	1234600-3	SKIN-ELEVATOR BALANCE TAB LH	1	
-55	1234600-4	SKIN-ELEVATOR BALANCE TAB RH	1	
-56	1234608-3	TIP-ELEVATOR LH	1	
-57	1234608-4	TIP-ELEVATOR RH	1	
-58	0760676-1	ARM ASSEMBLY-ELEVATOR	1	
		ATTACHING PARTS		
-59	AN4-11A	BOLT	1	
-60	AN4-7A	BOLT	3	
-61	MS21042L4	NUT	4	
		---*---		
-62	MS20200KP4	BEARING-LOWER	1	
-63	MS24462-4	BEARING-UPPER	1	
-64	C592001-0103	STATIC DISCHARGER	4	B
-65	1570102-1	STRAP ASSEMBLY	2	
		ATTACHING PARTS		
-66	AN515-8R6	SCREW	2	
-67	MS21044N08	NUT	2	
		---*---		
-68	C592001-0201	WICK-STATIC DISCHARGE	4	C

A---182 SERIAL 18262466 & ON
B---182 SERIAL 18262466 THRU 18264295
C---182 SERIAL 18264296 & ON

Fuselage

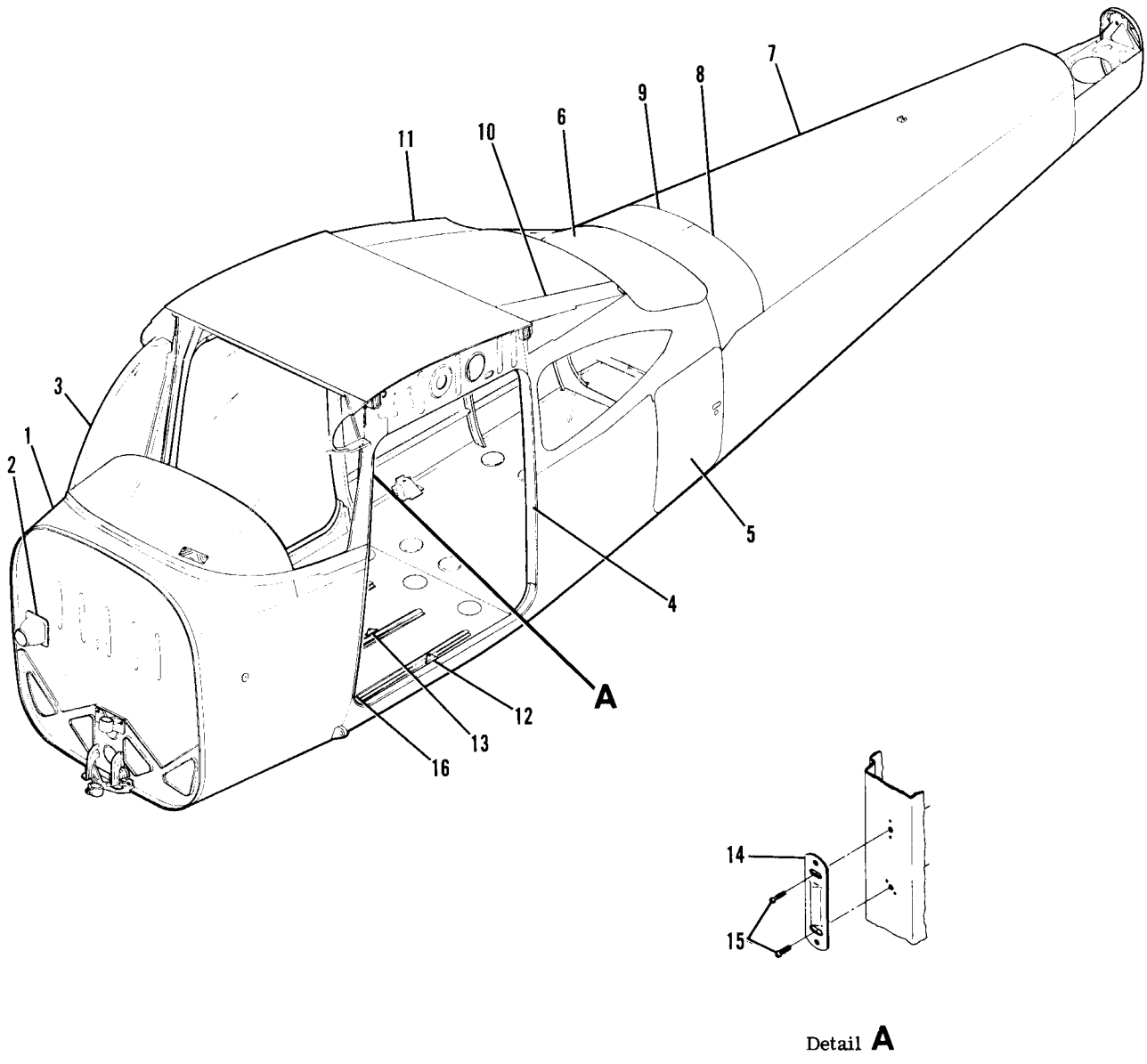

Detail A

Figure 17. Fuselage Assembly

FIGURE AND INDEX NO.	PART NUMBER	DESCRIPTION 1 2 3 4 5 6 7	UNITS PER ASSY	USABLE ON CODE
17 -		FUSELAGE ASSY	NP	
- 1	SEE FIG 18	FUSELAGE STRUCTURE ASSY-FRONT SECTION	1	
- 2	SEE FIG 73	VALVE ASSY-WARM AIR	1	
- 3	SEE FIG 28	WINDSHIELD INSTALLATION	1	
- 4	SEE FIG 24	CENTER CABIN SECTION ASSY	1	
- 5	SEE FIG 46	BAGGAGE DOOR INSTALLATION	1	
- 6	SEE FIG 29	WINDOW INSTALLATION-REAR	1	
- 7	SEE FIG 30	TAILCONE ASSY-FUSELAGE	1	
- 8	0711800-7	SKIN-UPPER AFT LH	1	
- 9	0711800-8	SKIN-UPPER AFT RH	1	
-10	0711685-1	FILLET ASSY-WING TO FUSELAGE LH	1	
-11	0711685-2	FILLET ASSY-WING TO FUSELAGE RH	1	
-12	0510205-6	FITTING-SEAT BELT INBD RH & OUTBD LH	2	
-13	0510205-5	FITTING-SEAT BELT INBD LH & OUTBD RH	2	
		ATTACHING PARTS		
	AN3-4A	BOLT	2	
	MS21044N3	NUT	2	
		---*---		
	0713047	PLATE-FINISH & TRIM	1	
-14	0710638-1	WEDGE-CABIN DOOR	2	
		ATTACHING PARTS		
-15	AN515-6R6	SCREW	2	
		---*---		
-16		NAMEPLATE-AIRCRAFT IDENTIFICATION	NP	

Fuselage (Cont)

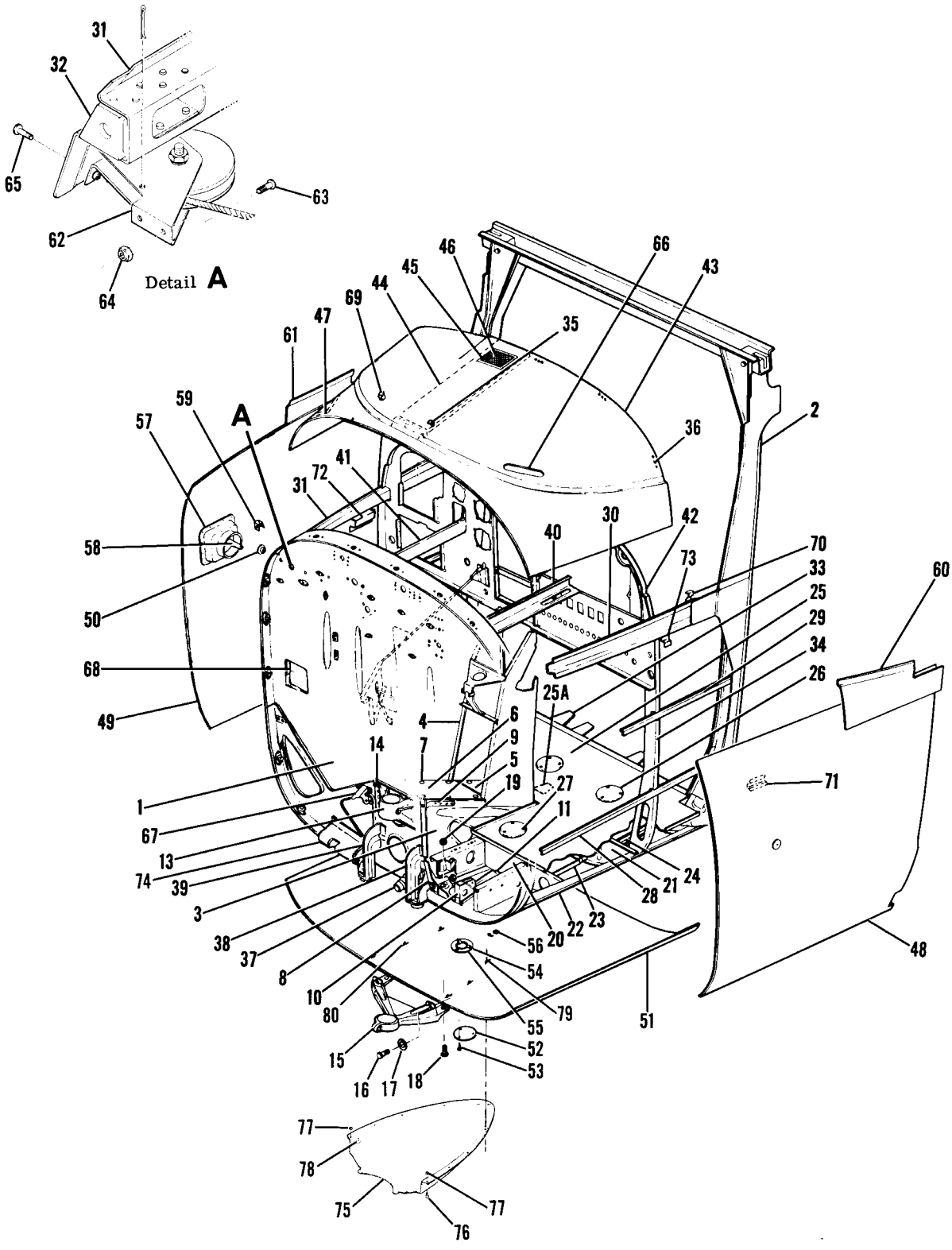

Figure 18. Fuselage Front Section Assembly

FIGURE AND INDEX NO.	PART NUMBER	DESCRIPTION 1 2 3 4 5 6 7	UNITS PER ASSY	USABLE ON CODE
18 -	0713334-10	STRUCTURE ASSEMBLY-FUSELAGE FRONT SECTION	1	A
	0713334-11	STRUCTURE ASSEMBLY-FUSELAGE FRONT SECTION	1	3
- 1	SEE FIG 22	FIREWALL ASSEMBLY	1	
- 2	SEE FIG 19	BULKHEAD ASSEMBLY-FRONT DOOR POST	1	
- 3	SEE FIG 21	TUNNEL COMPONENTS-FRONT SECTION	1	
- 4	SEE FIG 20	STRUCTURE ASSEMBLY-CONSOLE	1	
- 5	0713676-2	COVER PLATE-TUNNEL AFT	1	
- 6	0713676-1	COVER PLATE-TUNNEL FWD	1	
- 7	S1021Z8-8	SCREW	10	
	NAS395-13-3	NUT	10	
- 8	0713632-5	FITTING-FIREWALL TO TUNNEL LH	1	
	0713632-6	FITTING-FIREWALL TO TUNNEL RH	1	
- 9	0713638-1	FITTING-UPPER NOSE GEAR REINFORCEMENT LH	1	
	0713638-2	FITTING-UPPER NOSE GEAR REINFORCEMENT RH	1	
-10	0713663-1	PULLEY-BRACKET-ELEVATOR LH	1	
	0713663-2	PULLEY-BRACKET-ELEVATOR RH	1	
		ATTACHING PARTS		
	NAS220-6	SCREW	3	
	NAS679A08	NUT	1	
		---*---		
	MS21044N08	NUTPLATE	2	
-11	0713682-1	CHANNEL-REINFORCEMENT LH	1	
	0713682-2	CHANNEL-REINFORCEMENT RH	1	
-12	0713603-1	BULKHEAD ASSEMBLY-LH	1	
	0713603-2	BULKHEAD ASSEMBLY-RH	1	
-13	0543013-1	FITTING-NOSE GEAR UPPER	1	
		ATTACHING PARTS		
-14	NAS144-20	BOLT	2	
		---*---		
-15	0743606-2	FITTING-NOSE GEAR LOWER	1	
		ATTACHING PARTS		
-16	AN5-6A	BOLT	2	
-17	AN960-516	WASHER	2	
-18	AN175-7A	BOLT	2	
-19	MS21042L5	NUT	4	
		---*---		
-20	0713614-1	BULKHEAD-STA 8.125 LH	1	
	0713614-2	BULKHEAD STA 8.125 RH	1	
-21	0713617-1	BULKHEAD STA 17.00	1	
-22	0713615-1	STRINGER ASSEMBLY-ENGINE MOUNT LOWER LH	1	
	1213008-5	BRACKET	1	
	0713615-2	STRINGER ASSEMBLY-ENGINE MOUNT LOWER RH	1	
	1213008-5	BRACKET	1	
-23	0713685-1	STIFFENER-LH	1	
	0713685-2	STIFFENER-RH	1	
-24	0713619-1	STRINGER-BELLY LH	1	
	0713619-2	STRINGER-BELLY RH	1	
-25	0713668-4	FLOORBOARD ASSEMBLY	1	
	NAS395-14-3	NUT	6	
-25A	0762042-1	BRACKET-PULLEY	1	
-26	S225-1	COVER	5	
		ATTACHING PARTS		
-27	49330	STUD UC	3	
		---*---		
-28	0713670-1	STRINGER-LOWER LH	1	
	0762007-2	STRINGER-LOWER RH	1	
	NAS680C08M	NUTPLATE	1	
-29	0713639-1	STRINGER-UPPER LH	1	
	0713639-2	STRINGER-UPPER RH	1	
-30	0713263-1	STRINGER ASSEMBLY-ENGINE MOUNT UPPER LH	1	
	0713263-5	BRACKET	1	
-31	0713263-2	STRINGER ASSEMBLY-ENGINE MOUNT UPPER RH	1	
-32	0713263-6	BRACKET	1	
-33	0713684-2	DOUBLER-BELLY	1	
-34	0713787-4	BULKHEAD-STA 17.00 LH	1	
	0713787-5	BULKHEAD-STA 17.00 RH	1	
	1213412-11	SUPPORT	2	
-35	A8566-8Z	BRACKET-ANGLE	1	
-36	NAS697A08	NUTPLATE	6	
-37	0713666-1	BOOT ASSEMBLY-STEERING	1	

CONTINUED ON NEXT PAGE

FIGURE AND INDEX NO.	PART NUMBER	DESCRIPTION 1 2 3 4 5 6 7	UNITS PER ASSY	USABLE ON CODE
18 -38	0753027-1	SHOCKMOUNT ASSEMBLY-LH	1	
-39	0753027-2	SHOCKMOUNT ASSEMBLY-RH	1	
-40	0760691-1	SUPPORT ASSEMBLY-CONTROL WHEEL LH	1	
-41	0760691-2	SUPPORT ASSEMBLY-CONTROL WHEEL RH	1	
		ATTACHING PARTS		
	NAS220-6	SCREW LH ONLY	2	
	MS21044N08	NUT LH ONLY	2	
	NAS220-6	SCREW RH ONLY	4	
	MS21044N08	NUT RH ONLY	4	
		---*---		
-42	0713482-1	PANEL ASSEMBLY-STATIONARY	1	A
	0713482-2	PANEL ASSEMBLY-STATIONARY	1	B
-43	0713334-6	SKIN-DECK	1	
-44	0713935-2	DOUBLER ASSEMBLY	1	
	S1741-1	ANCHOR	1	
	NAS680A08	NUTPLATE	3	
-45	1213929-1	LOUVER	1	
-46	0713847-11	GRILL	1	
-47	0713296-1	SUPPORT ASSEMBLY-HEAT SINK	1	
-48	0713334-3	SKIN-FORWARD LH	1	
-49	0713334-4	SKIN-FORWARD RH	1	
-50	S1776-5	BUTTON-STATIC LINE	1	
-51	0713334-5	SKIN-FORWARD BELLY	1	
	0713626-1	BRACKET	1	
-52	S225-3	PLATE-ACCESS	1	
		ATTACHING PARTS		
-53	S1021Z8-6	SCREW	3	
-54	NAS395-14-3	NUT	3	
		---*---		
-55	0713661-1	DOUBLER-ACCESS OPENING	1	
-56	S1702-1	PLUG BUTTON	1	
-57	0713139-1	INLET ASSEMBLY-AIR VENT	1	
-58	0713135-2	DOOR ASSEMBLY-AIR VENT	1	
	0713140-1	SEAL-AIR VENT INLET	1	
-59	0450286-1	CLIP	1	
-60	0713334-7	SKIN-RETAINER LH	1	
-61	0713334-8	SKIN-RETAINER RH	1	
-62	0760105-5	BRACKET ASSEMBLY-AILERON PULLEY LH	1	
	0760105-6	BRACKET ASSEMBLY-AILERON PULLEY RH	1	
		ATTACHING PARTS		
-63	NAS221-6	SCREW	2	
-64	MS21044N3	NUT	2	
-65	AN507-832R6	SCREW	4	
		---*---		
	NAS696A08	NUTPLATE	4	
-66	0713952-1	NOZZLE ASSEMBLY	1	
	1250116-1	VALVE ASSEMBLY	1	
	1250115-3	LEVER ASSEMBLY	1	
-67	0713757-1	BRACKET-FUEL STRAINER	1	
-68	0753601-16	DUCT ASSEMBLY-HEATER	1	
-69	S1742-1	STA-STRAP	1	
-70	0713288-3	BRACKET-DOORPOST SHIELD LH	1	
	0713288-4	BRACKET-DOORPOST SHIELD RH	1	
-71	1213718-1	BRACKET ASSEMBLY-FILTER	1	
-72	0713943-1	GUARD-WIRE BUNDLE	1	
-73	0713944-1	CABLE GUARD	2	
-74	0753028-2	BAFFLE-COWL FLAP EXIT RH	1	
	0753028-1	BAFFLE-COWL FLAP EXIT LH	1	
-75	0713335-1	FAIRING ASSEMBLY-NOSE GEAR AFT	1	
		ATTACHING PARTS		
-76	AN525-832R8	SCREW	9	
-77	AN960-10L	WASHER	2	
		---*---		
-78	MS35489-6S	GROMMET	1	
-79	NAS696A08	NUTPLATE	1	
-80	NAS697A08	NUTPLATE	6	

A---182 SERIAL 18262466 THRU 18264295
B---182 SERIAL 18264296 & ON

This page intentionally left blank.

Fuselage (Cont)

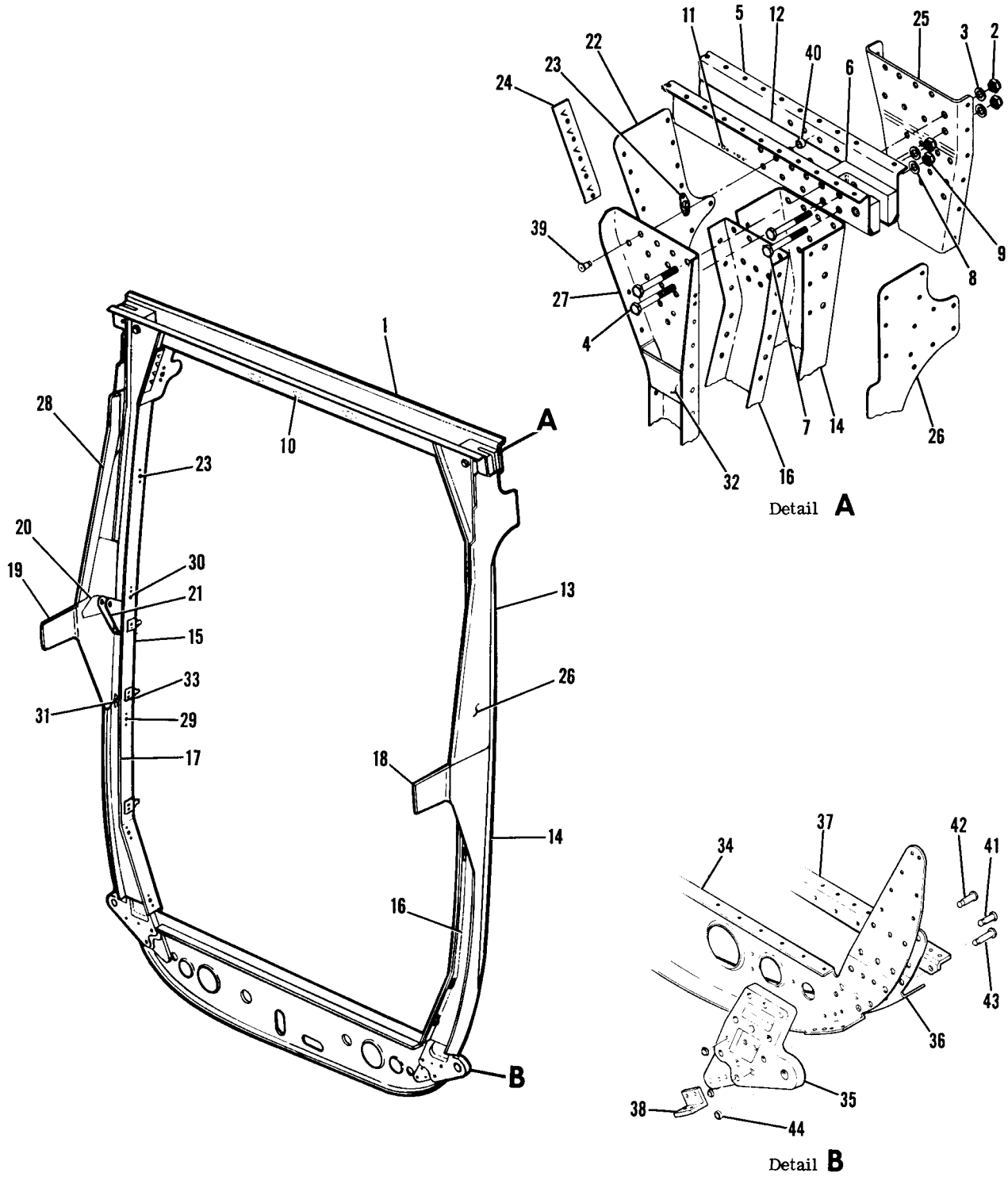

Figure 19. Front Doorpost Bulkhead Assembly

FIGURE AND INDEX NO.	PART NUMBER	DESCRIPTION 1 2 3 4 5 6 7	UNITS PER ASSY	USABLE ON CODE
19 -	0713604-15	BULKHEAD ASSEMBLY-FRONT DOORPOST	1	
- 1	0711066-6	SPAR ASSEMBLY-FORWARD FUSELAGE	1	
		ATTACHING PARTS		
- 2	MS21044N3	NUT	4	
- 3	AN960D10	WASHER	4	
- 4	AN3-21A	BOLT	4	
		---*---		
- 5	1213127-4	SPAR-FORWARD FUSELAGE	1	
- 6	0411129	BLOCK-SPAR	2	
		ATTACHING PARTS		
- 7	AN3-20A	BOLT	2	
- 8	AN960-10	WASHER	2	
- 9	MS21044N3	NUT	2	
		---*---		
-10	A6191-8Z-3	NUTPLATE	3	
-11	NAS686A3	NUTPLATE	4	
-12	0711066-2	REINFORCEMENT-SPAR	1	
-13	0713604-11	DOORPOST ASSEMBLY-FUSELAGE LH	1	
	0713604-12	DOORPOST ASSEMBLY-FUSELAGE RH	1	
-14	0713604-5	DOOR JAMB ASSEMBLY-LH	1	
-15	0713604-6	DOOR JAMB ASSEMBLY-RH	1	
-16	0713604-7	CHANNEL-DOORPOST ASSEMBLY LH	1	
-17	0713604-8	CHANNEL-DOORPOST ASSEMBLY RH	1	
-18	0713612-1	DOUBLER-FORWARD DOORPOST LH	1	
-19	0713612-2	DOUBLER-FORWARD DOORPOST RH	1	
-20	1210051-2	SPACER-UPPER DOOR HINGE RH	1	
	1210051-1	SPACER-UPPER DOOR HINGE LH	1	
-21	0760602-2	BRACKET-PULLEY RH	1	
	0760602-1	BRACKET-PULLEY LH	1	
		ATTACHING PARTS		
	AN525-10R8	SCREW	2	
	NAS680A3	NUTPLATE	2	
		---*---		
-22	0713633-1	UPPER PLATE-FORWARD DOORPOST LH	1	
	0713633-2	UPPER PLATE-FORWARD DOORPOST RH	1	
-23	NAS680A3	NUTPLATE	4	
-24	1213115-1	HOOK STRIP-UPHOLSTERY LH	1	
	1213115-2	HOOK STRIP-UPHOLSTERY RH	1	
-25	0713607-1	FLANGE PLATE-AFT LH	1	
	0713607-2	FLANGE PLATE-AFT RH	1	
-26	0713611-1	RETAINER-OUTER LH	1	
	0713611-2	RETAINER-OUTER RH	1	
-27	0713606-1	PLATE-FORWARD FLANGE LH	1	
	0713606-2	PLATE-FORWARD FLANGE RH	1	
-28	0713609-6	RETAINER-INNER FORWARD DOORPOST RH	1	
	0713609-5	RETAINER-INNER FORWARD DOORPOST LH	1	
-29	S1863-2	NUTPLATE TIN	3	
-30	S1862-1	NUTPLATE TIN	1	
-31	NAS680A3	NUTPLATE ATTACH DOOR STOP HINGE	3	
-32	0713732-5	SHIELD ASSY-CABLE LH	1	
	0713732-6	SHIELD ASSY-CABLE RH	1	
-33	0700704-1	CLIP-UPHOLSTERY	1	
-34	0713608-3	BULKHEAD-FORWARD DOORPOST LOWER	1	
-35	0713610-9	FITTING-FORWARD DOORPOST BULKHEAD LH	1	
	0713610-10	FITTING-FORWARD DOORPOST BULKHEAD RH	1	
-36	0713613-5	BULKHEAD REINFORCEMENT-FWD DOORPOST LH	1	
	0713613-6	BULKHEAD REINFORCEMENT-FWD DOORPOST RH	1	
-37	0713605-1	REINFORCEMENT-FWD DOORPOST	1	
-38	0713683-1	ANGLE-LOWER ENGINE MOUNT	2	
-39	NAS1054-6-3	RIVET-HI SHEAR	20	
-40	NAS179-6	COLLAR-HI SHEAR RIVET	20	
-41	NAS1054-8-11	RIVET-HI SHEAR	2	
-42	NAS1054-8-12	RIVET-HI SHEAR	4	
-43	NAS1054-8-13	RIVET-HI SHEAR	12	
-44	NAS179-8	COLLAR-HI SHEAR RIVET	18	

Fuselage (Cont)

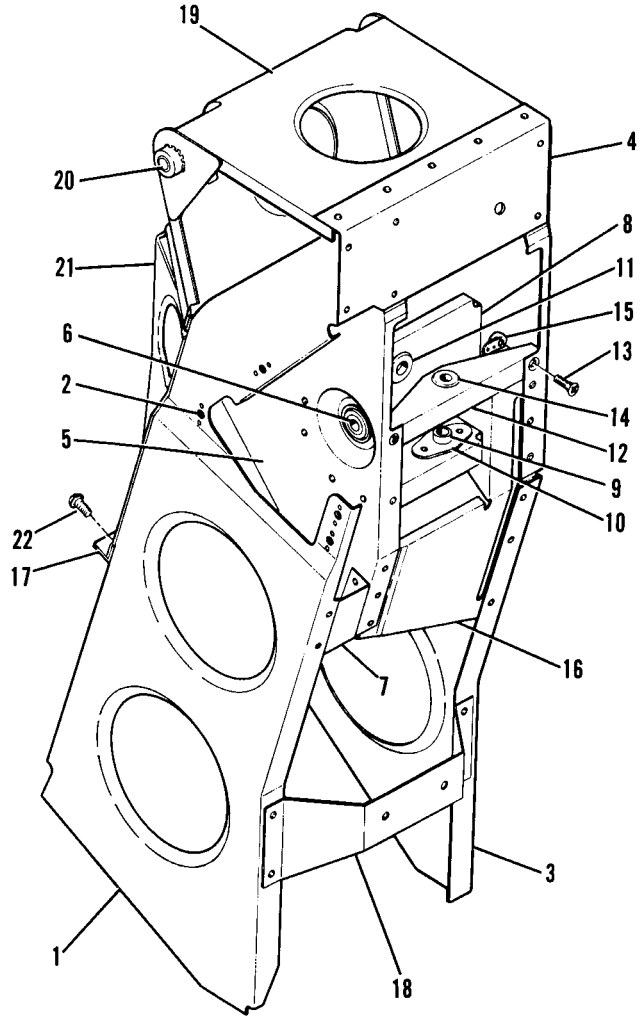

Figure 20. Console Structure Assembly

FIGURE AND INDEX NO.	PART NUMBER	DESCRIPTION 1 2 3 4 5 6 7	UNITS PER ASSY	USABLE ON CODE
20 -	0713640-202	CONSOLE STRUCTURE ASSEMBLY	1	
- 1	0713640-3	SIDE PANEL ASSEMBLY-LH	1	
- 2	NAS697A08	NUTPLATE	4	
- 3	0713640-4	SIDE PANEL-RH	1	
- 4	0713975-1	BRACKET-PEDESTAL TO PANEL	1	
- 5	0713641-1	SUPPORT ASSY-ELEVATOR TRIM	1	
- 6	M451	BEARING TOR	1	
	0411320	HOUSING	1	
- 7	0713641-3	CLIP	1	
- 8	0713647-1	SUPPORT ASSY-RUDDER TRIM LOWER	1	
- 9	S1004-1A	BEARING	1	
-10	0713647-3	MOUNT-BEARING	1	
-11	S1080-1	GROMMET	1	
-12	0713657-1	SUPPORT ASSY-RUDDER TRIM UPPER	1	
		ATTACHING PARTS		
-13	AN507-632R4	SCREW	2	
		---*---		
-14	S1004-1A	BEARING	1	
	0713647-3	MOUNT-BEARING	1	
	0713647-2	SUPPORT-BEARING	1	
-15	NAS696A06LK	NUTPLATE	2	
-16	0713645-2	SUPPORT ASSY-COWL FLAP PLATE	1	
-17	0713651-1	ANGLE	1	
		ATTACHING PARTS		
	AN515-6R6	SCREW	2	
	MS21044N06	NUT	2	
	AN960-6	WASHER	AR	
		---*---		
-18	0713644-1	BRACKET-FUEL SELECTOR SUPPORT	1	
-19	0762037-7	BRACKET ASSY-FLAP FOLLOW UP	1	
-20	0762037-3	BEARING ASSY	2	
-21	0713734-1	BRACKET ASSY-RUDDER	1	
		ATTACHING PARTS		
-22	AN515-6R6	SCREW	2	
	MS21044N06	NUT	2	
		---*---		
	0713647-3	MOUNT-BEARING	1	
	S1004-1A	BEARING	1	

Fuselage (Cont)

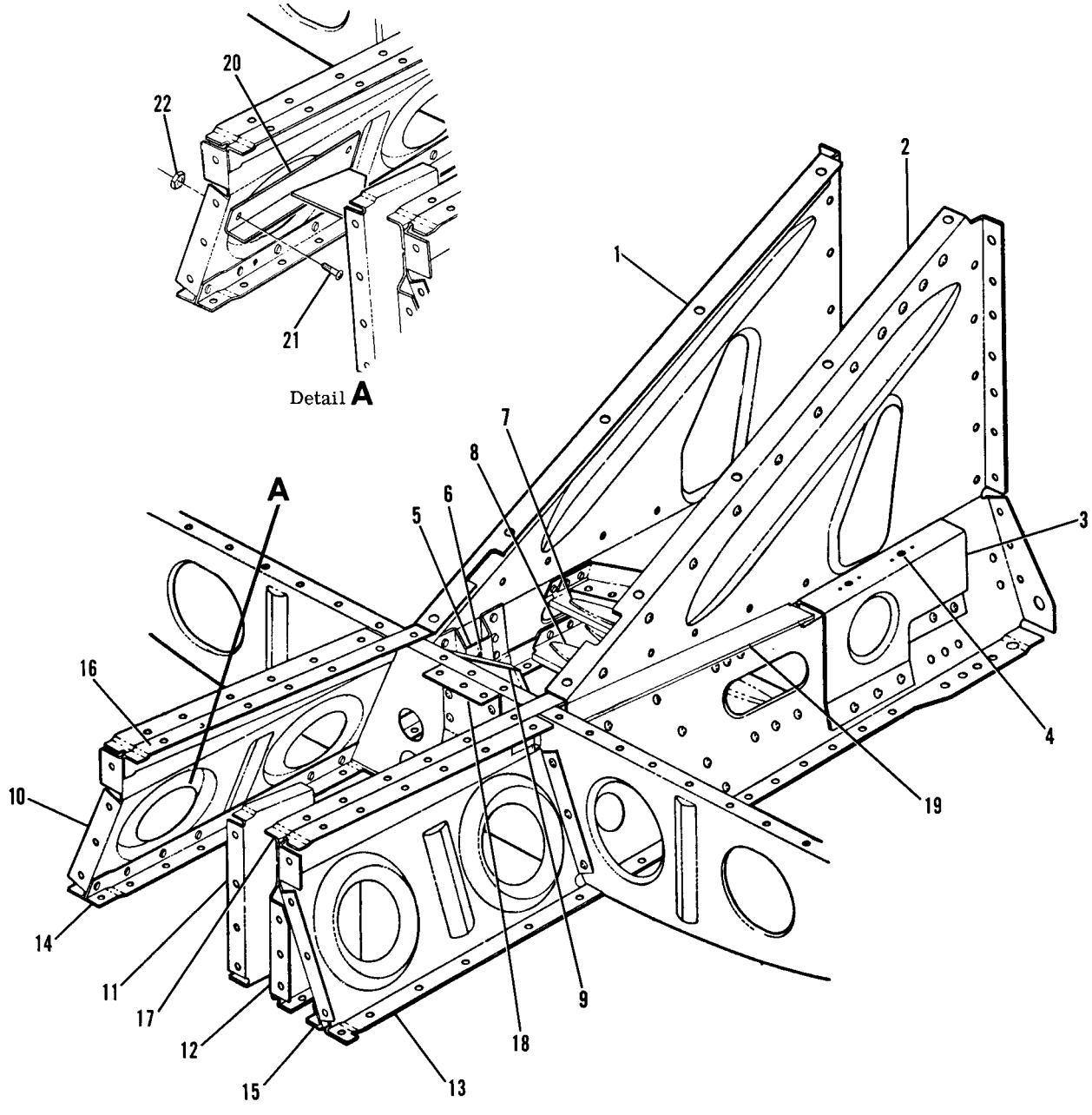

Figure 21. Front Section Tunnel Components

FIGURE AND INDEX NO.	PART NUMBER	DESCRIPTION 1 2 3 4 5 6 7	UNITS PER ASSY	USABLE ON CODE
21 -		TUNNEL COMPONENTS-FRONT SECTION	NP	
- 1	0713631-1	BULKHEAD ASSEMBLY-TUNNEL LH	1	
- 2	0713631-2	BULKHEAD ASSEMBLY-TUNNEL RH	1	
- 3	0713628-2	BRACKET ASSEMBLY-INBOARD PEDAL SUPPORT RH	1	
	0713628-1	BRACKET ASSEMBLY-INBOARD PEDAL SUPPORT LH	1	
- 4	NAS686A3	NUTPLATE	2	
	0713624-2	ANCHOR-BRAKE CYLINDER LH ONLY	1	
- 5	0713677-3	BRACKET ASSEMBLY	1	
- 6	NAS686A3	NUTPLATE	1	
- 7	0713637-1	SUPPORT ASSEMBLY-NOSE STEERING BELLCRANK UPPER	1	
- 8	0713636-1	BRACKET-NOSE STEERING BELLCRANK LOWER	1	
- 9	0713678-1	BRACKET-TRIM SPROCKET	1	
-10	0713634-2	BULKHEAD ASSEMBLY-AFT TUNNEL LH	1	
-11	0713669-1	BRACKET-RUDDER PULLEY	1	
-12	0713669-2	BRACKET-RUDDER PULLEY	1	
-13	0713634-3	BULKHEAD-AFT TUNNEL RH	1	
-14	0713694-1	ANGLE-TUNNEL LH	1	
-15	0713694-2	ANGLE-TUNNEL RH	1	
-16	0713671-3	ANGLE-TUNNEL LH	1	
-17	0713671-4	ANGLE-TUNNEL RH	1	
-18	0713681-1	BRACKET-FUEL SELECTOR VALVE	1	
-19	0713290-2	REINFORCEMENT-RH	1	
	0713290-1	REINFORCEMENT-LH	1	
-20	0760014-1	GUARD ASSY	1	
		ATTACHING PARTS		
-21	AN515-8R6	SCREW	2	
-22	MS21044N08	NUT	2	
		---*---		

Fuselage (Cont)

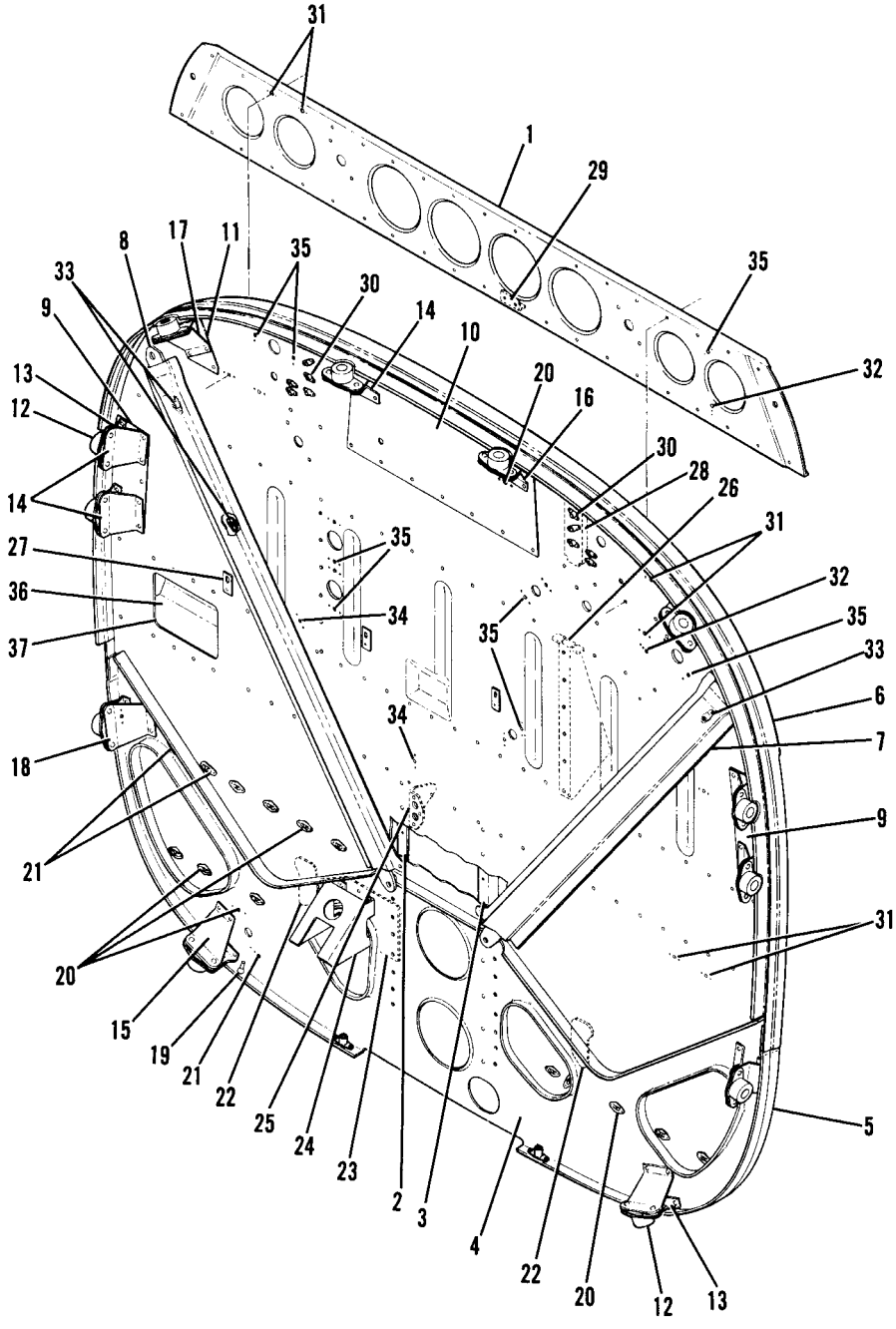

Figure 22. Firewall Assembly

FIGURE AND INDEX NO.	PART NUMBER	DESCRIPTION 1 2 3 4 5 6 7	UNITS PER ASSY	USABLE ON CODE
22 -	0753103-2	FIREWALL ASSEMBLY	1	
- 1	0753600-19	DOUBLER-FIREWALL	1	
- 2	0753600-11	ANGLE-SUPPORT RH	1	
- 3	0753600-12	ANGLE-SUPPORT LH	1	
- 4	0753105-3	DOUBLER ASSEMBLY-FORWARD	1	
	NAS680A08	NUTPLATE	2	
- 5	0753108-3	DOUBLER-AFT LH	1	
	0753108-4	DOUBLER-AFT RH	1	
- 6	0753106-8	SEAL ASSEMBLY-UPPER	1	
- 7	0753102-1	STIFFENER ASSEMBLY-LH	1	
- 8	0753102-2	STIFFENER ASSEMBLY-RH	1	
	0753102-9	STIFFENER PLATE-UPPER	1	
	0753102-10	STIFFENER PLATE-LOWER	1	
- 9	0753107-4	DOUBLER-SHOCKMOUNT	2	
-10	0753107-7	DOUBLER-SHOCKMOUNT	1	
-11	0753107-8	DOUBLER-SHOCKMOUNT	2	
-12	S2155-1	SHOCKMOUNT	12	
-13	0753029-1	BRACKET-SHOCKMOUNT	12	
-14	0753030-1	GUSSET-SHOCKMOUNT	7	
-15	0753030-2	GUSSET-SHOCKMOUNT	1	
-16	0753030-3	GUSSET-SHOCKMOUNT	1	
-17	0753030-6	GUSSET-SHOCKMOUNT RH	1	
	0753030-7	GUSSET-SHOCKMOUNT LH	1	
-18	0753030-8	GUSSET ASSEMBLY-SHOCKMOUNT	1	
	NAS680A08	NUTPLATE	1	
-19	S1929-1	BUMPER	2	
-20	S1863-3	NUT TIN	17	
-21	S1862-2	NUT TIN	3	
-22	0753602-1	DOUBLER	2	
-23	0753600-14	DOUBLER-FUEL STRAINER	1	
-24	0713757-2	BRACKET-FUEL STRAINER	1	
-25	0713700-1	BRACKET-COWL FLAP CONTROL	1	
-26	0760673-1	BRACKET-ELEVATOR PULLEY	2	
-27	0753000-13	DOUBLER	3	
-28	0753004-1	DOUBLER-LH	1	
	0753004-2	DOUBLER-RH	1	
-29	0762046-1	BRACKET-SPRING	1	
-30	NAS697A06L	NUTPLATE	10	
-31	NAS697A4K	NUTPLATE	6	
-32	NAS696A08K	NUTPLATE	2	
-33	NAS680A3	NUTPLATE	2	
-34	NAS697A08K	NUTPLATE	2	
-35	S1863-3A	NUT TIN	12	
-36	0753601-16	DUCT ASSEMBLY-HEATER	1	
-37	SEE FIG 70	VALVE ASSEMBLY-WARM AIR	1	

Fuselage (Cont)

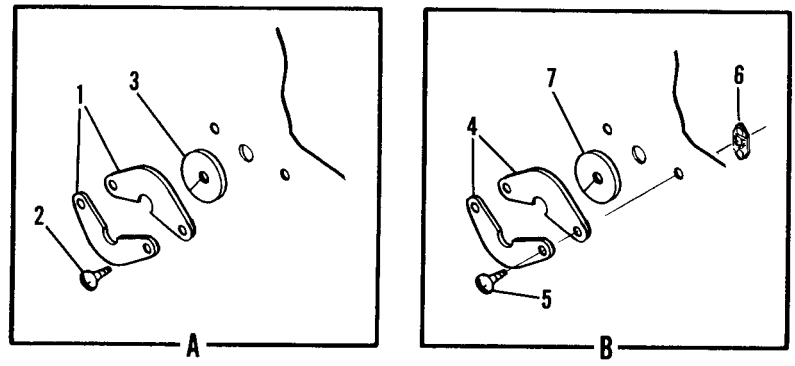

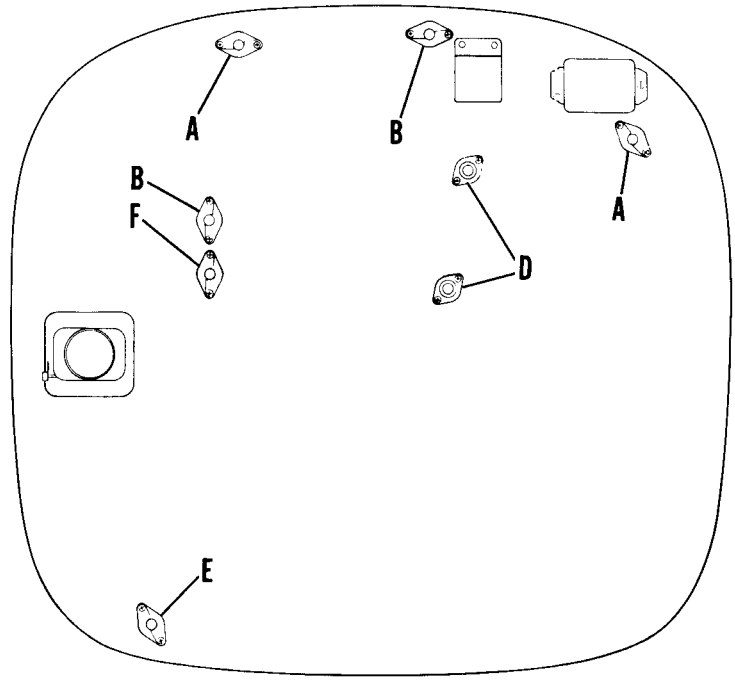

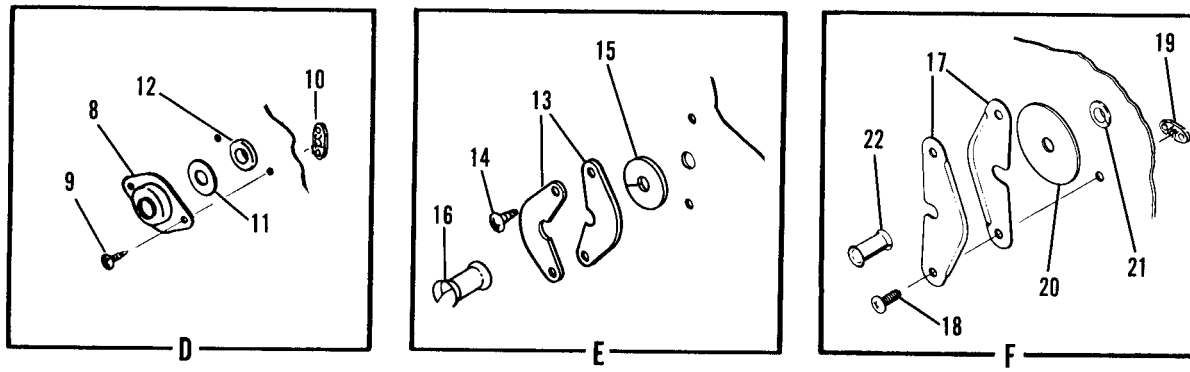

Figure 23. Firewall Grommets Installation

FIGURE AND INDEX NO.	PART NUMBER	DESCRIPTION 1 2 3 4 5 6 7	UNITS PER ASSY	USABLE ON CODE
23 -		FIREWALL GROMMETS INSTALLATION	NP	
- 1	S1095-3	SHIELD-FIREWALL GROMMET	2	
		ATTACHING PARTS		
- 2	S1021Z8-6	SCREW	2	
	S1863-3A	NUTPLATE	2	
		---*---		
- 3	NAS557-6A	GROMMET-FIREWALL	2	
- 4	S1095-2	SHIELD-FIREWALL GROMMET	2	
		ATTACHING PARTS		
- 5	S1021Z8-6	SCREW	2	
- 6	S1863-3	NUT	2	
		---*---		
- 7	NAS557-4A	GROMMET-FIREWALL	2	
- 8	S352	SHIELD-FIREWALL GROMMET	2	
		ATTACHING PARTS		
- 9	S1021Z8-6	SCREW	2	
-10	S1863-3A	NUT	2	
		---*---		
-11	S354-1	GROMMET-ASBESTOS	2	
-12	MS35489-11	GROMMET-FIREWALL	2	
-13	S1095-4	SHIELD-FIREWALL GROMMET	2	
		ATTACHING PARTS		
-14	S1021Z8-8	SCREW	2	
	S1863-3	NUTPLATE	1	
	S1862-2	NUTPLATE	1	
		---*---		
-15	NAS557-8A	GROMMET-FIREWALL	2	
-16	0713003-74	FAIRLEAD	1	
-17	S1095-1	SHIELD-FIREWALL	2	
		ATTACHING PARTS		
-18	S1021Z8-6	SCREW	2	
-19	S1863-3A	NUT	2	
		---*---		
-20	S354-5	GROMMET-ASBESTOS	1	
-21	NAS557-4A	GROMMET	1	
-22	0753003-1	BUSHING	1	

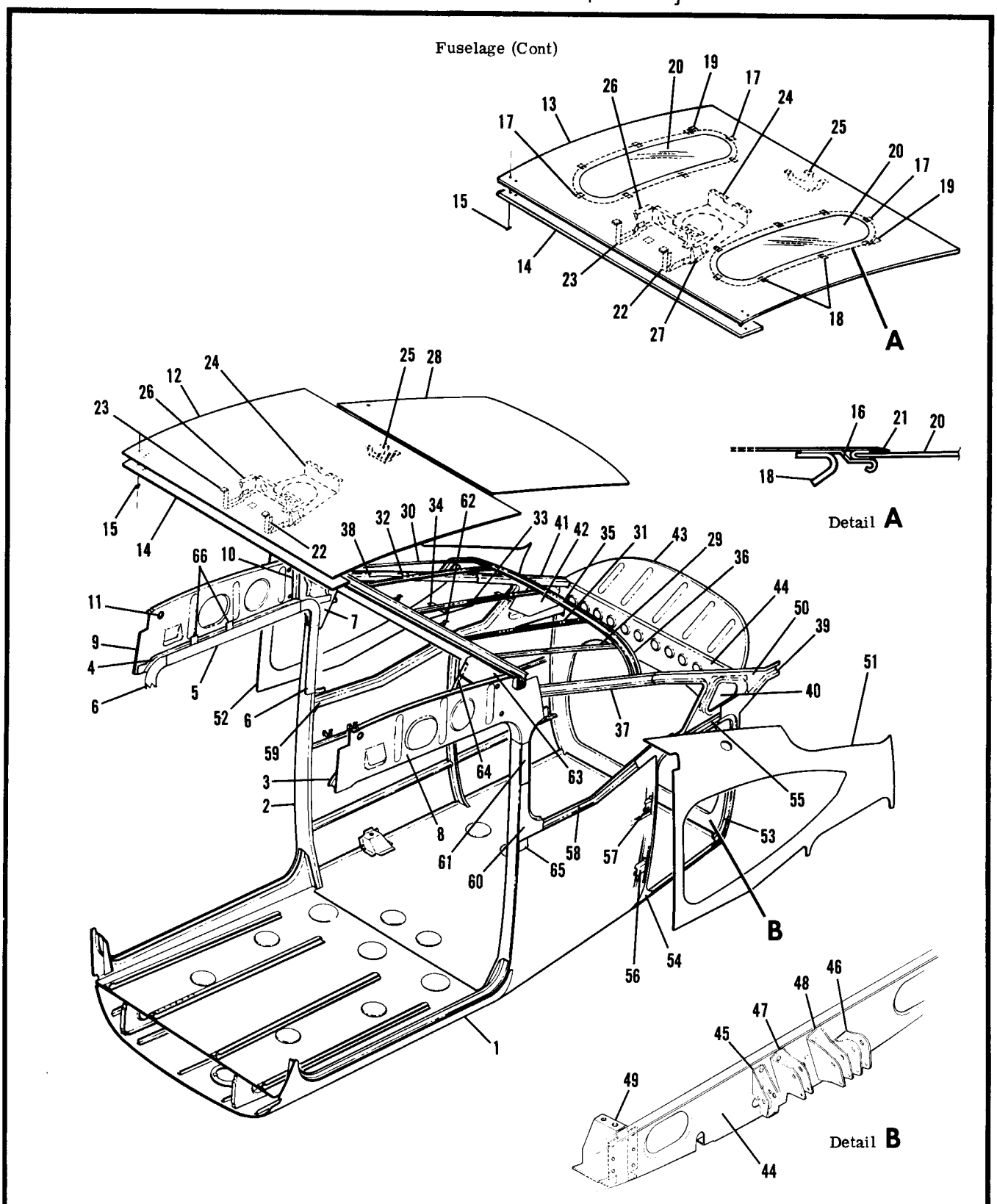

Figure 24. Center Cabin Section Assembly

FIGURE AND INDEX NO.	PART NUMBER	DESCRIPTION 1 2 3 4 5 6 7	UNITS PER ASSY	USABLE ON CODE
24 -		CENTER CABIN SECTION ASSY	1	
		CENTER CABIN SECTION ASSY WITH SKYLIGHT	1	
- 1	SEE FIG 26	LOWER CABIN SECTION ASSY	1	
- 2	SEE FIG 25	DOORPOST ASSY-REAR	1	
		ATTACHING PARTS		
	NAS1054-8-10	RIVET-HI SHEAR	16	
	NAS179-8	COLLAR	16	
		---*---		
- 3	0710602-1	SILL ASSY-UPPER CABIN DOOR LH	1	
- 4	0710602-2	SILL ASSY-UPPER CABIN DOOR RH	1	
- 5	0715045-2	RETAINER 1RH & 1LH	2	
		ATTACHING PARTS		
	S1021A4-6	SCREW	5	
		---*---		
- 6	0715045-1	RETAINER 2RH & 2LH	4	
		ATTACHING PARTS		
	S1021A4-6	SCREW	4	
		---*---		
- 7	0710603-4	GUSSET-RETAINER RH	1	
	0710603-3	GUSSET-RETAINER LH	1	
- 8	0710601-29	BULKHEAD ASSY-UPPER CABIN LH	1	
- 9	0710601-30	BULKHEAD ASSY-UPPER CABIN RH	1	
-10	0710629-2	STIFFENER-RH	1	
	0710629-1	STIFFENER-LH	1	
-11	S1050-1	GROMMET 5.64 IN LG BKI REF S1050-1-5.64	2	
-12	0710605-200	CABIN TOP ASSY-FORWARD	1	
-13	0701017-200	CABIN TOP ASSY SKYLIGHT-FORWARD	1	
-14	1210020-10	CAP-SPAR	1	
-15	NAS680A08	NUTPLATE	4	
-16	0411174-3	FRAME USED ON SKYLIGHT ASSY ONLY	2	
-17	0414014-1	BRACKET USED ON SKYLIGHT ASSY ONLY	2	
-18	0414014-2	BRACKET USED ON SKYLIGHT ASSY ONLY	12	
-19	0713951-3	BRACKET-LH USED ON SKYLIGHT ASSY ONLY	1	
	0713951-4	BRACKET-RH USED ON SKYLIGHT ASSY ONLY	1	
-20	0511797-2	WINDOW USED ON SKYLIGHT ASSY ONLY	2	
-21	S1055-1	CHANNEL USED ON SKYLIGHT ASSY ONLY	2	
		45.65 IN LG BKI REF S1055-1-45.65		
-22	0711781-1	BRACKET LH-OVERHEAD CONSOLE	1	
-23	0711781-2	BRACKET RH-OVERHEAD CONSOLE	1	
		ATTACHING PARTS		
	AN507-832R8	SCREW	2	
		---*---		
-24	1211077-5	SUPPORT ASSY-SPEAKER	1	
	NAS697A08	NUTPLATE	2	
-25	0711683-1	BRACKET ASSY-DOMELIGHT	1	
-26	1211076-1	BRACKET ASSY-SUPPORT	1	
	1211089-1	BRACKET	2	
	NAS696A08	NUTPLATE	2	
	NAS697A08	NUTPLATE	3	
-27	1215012-3	SUPPORT-LH	1	
	1215012-2	SUPPORT-RH	1	
-28	0711800-9	SKIN-CABIN TOP AFT	1	
-29	0711677-1	STIFFENER-CABIN TOP LH	1	
-30	0711677-2	STIFFENER-CABIN TOP RH	1	
-31	0711678-3	STIFFENER-CABIN TOP LH	1	
-32	0711678-4	STIFFENER-CABIN TOP RH	1	
-33	0711684-1	STIFFENER-CABIN TOP CENTER	1	
-34	0411680	HANGER	2	
-35	0711679-3	STIFFENER	1	
-36	0711681-1	RETAINER-REAR WINDOW	1	
-37	0712648-1	STRINGER-LH	1	
-38	0712648-2	STRINGER-RH	1	
-39	0711676-7	STIFFENER ASSY-LH	1	
	0711676-3	ANCHOR ASSY-CHAIN	1	
	NAS697A08	NUTPLATE	1	
	NAS697A3K	NUTPLATE	1	
-40	0711793-1	PLATE ASSY	1	
	0711793-5	PAD	1	
	NAS680A4	NUTPLATE	1	

CONTINUED ON NEXT PAGE

FIGURE AND INDEX NO.	PART NUMBER	DESCRIPTION 1 2 3 4 5 6 7	UNITS PER ASSY	USABLE ON CODE
24 -41	0711676-6	STIFFENER RH	1	
-42	0711793-2	PLATE ASSY	1	
	0711793-6	PAD	1	
	NAS680A4	NUTPLATE	1	
	NAS697A3K	NUTPLATE	1	
-43	0712625-4	BULKHEAD-CANTED	1	
-44	0712505-3	BULKHEAD ASSY-STA. 110.00	1	
-45	0412467	BRACKET-PULLEY	1	
-46	0512160-2	BRACKET-PULLEY	1	
		ATTACHING PARTS		
	AN3-3A	BOLT	1	
	MS21044N3	NUT	1	
		---*---		
-47	0712638-3	BRACKET-PULLEY	1	
		ATTACHING PARTS		
	AN3-3A	BOLT	1	
	MS21044D3	NUT	1	
		---*---		
-48	0712637-2	BRACKET-PULLEY	1	
		ATTACHING PARTS		
	AN3-3A	BOLT	1	
	MS21044D3	NUT	1	
		---*---		
	0712639-1	BRACKET-PULLEY	1	
		ATTACHING PARTS		
	AN3-3A	BOLT	1	
	MS21044N3	NUT	1	
		---*---		
-49	0712757-2	BRACKET ASSY-BAGGAGE NET RH	1	
	0712757-1	BRACKET ASSY-BAGGAGE NET LH	1	
	0712757-5	SPACER	1	
	NAS696A3K	NUTPLATE USED ON 0712757-2 ONLY	1	
	NAS697A4K	NUTPLATE USED ON 0712757-1 ONLY	1	
-50	0712654-1	CLIP-LH	1	
	0712654-2	CLIP-RH	1	
-51	0711800-5	SKIN-CABIN SIDE LH	1	
-52	0711800-6	SKIN-CABIN SIDE RH	1	
-53	0711618-4	BAGGAGE DOOR JAMB-AFT	1	
-54	0711618-3	BAGGAGE DOOR JAMB-FWD	1	
-55	0711673-1	BAGGAGE DOOR SILL-UPPER	1	
-56	0711628-1	HINGE BRACKET-LOWER	1	
-57	0711628-2	HINGE BRACKET-UPPER	1	
-58	0711671-3	STRINGER-LH	1	
-59	0711671-4	STRINGER-RH	1	
-60	0711610-1	GUSSET PLATE-LH	1	
	0711610-2	GUSSET PLATE-RH	1	
-61	0711615-1	WINDOW RETAINER-FWD LH	1	
	0711615-2	WINDOW RETAINER-FWD RH	1	
-62	0700108-1	BRACKET-TIARA MOUNTING LH	1	
	0700108-2	BRACKET-TIARA MOUNTING RH	1	
-63	1210032-9	VIBRATION DAMPENER ASSY-LH	1	
	1210032-8	VIBRATION DAMPENER ASSY-RH	1	
	NAS696A08	NUTPLATE	1	
	NAS697A08	NUTPLATE	3	
-64	0711776-1	STIFFENER-ANTENNA LH	1	
	0711776-2	STIFFENER-ANTENNA RH	1	
-65	0711701-1	BUMPER-LATCH BOLT	2	
-66	0715048-1	SUPPORT	4	

This page intentionally left blank.

Fuselage (Cont)

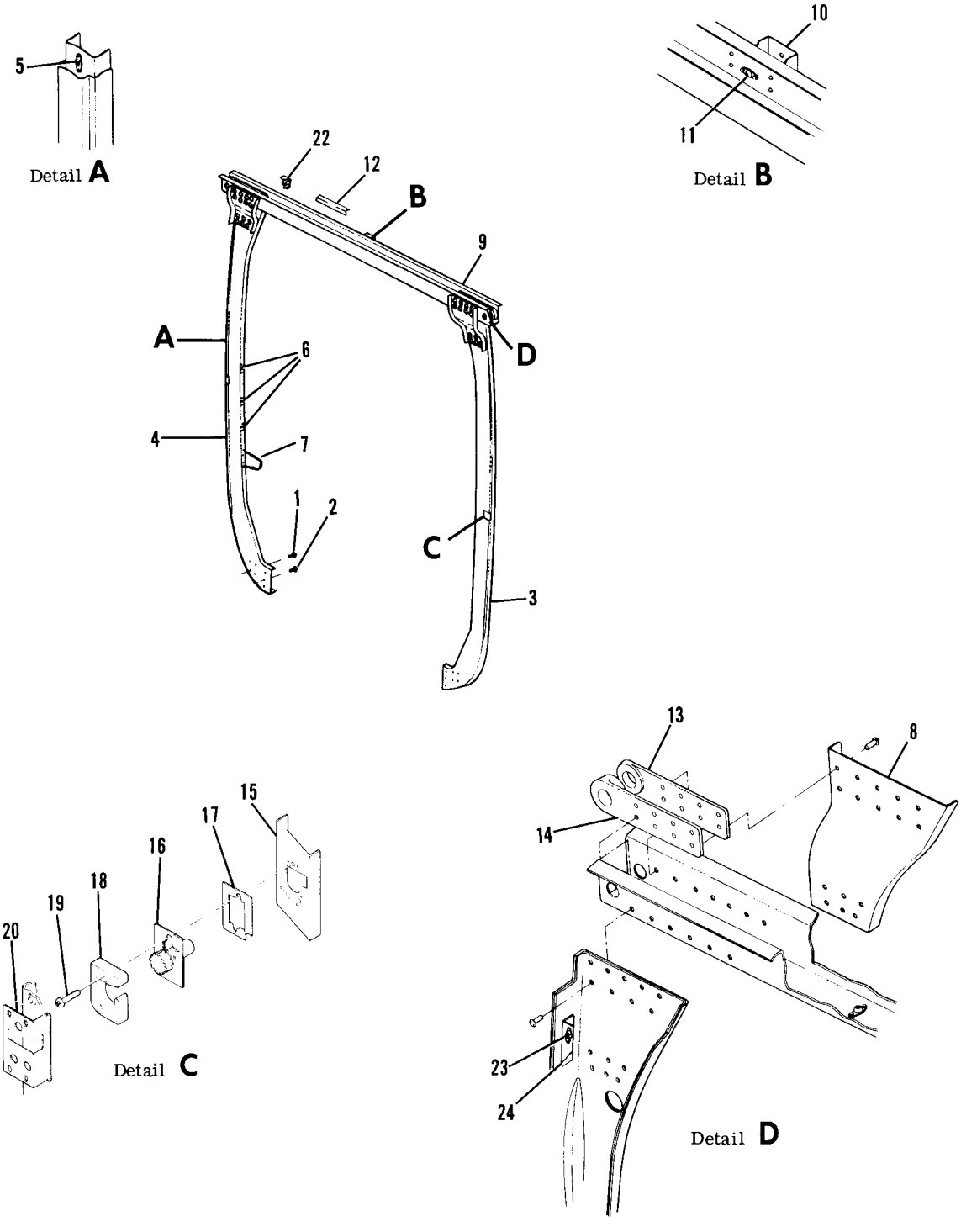

Figure 25. Rear Doorpost Bulkhead Assembly

FIGURE AND INDEX NO.	PART NUMBER	DESCRIPTION 1 2 3 4 5 6 7	UNITS PER ASSY	USABLE ON CODE
25 -	0711604-215	BULKHEAD ASSY-REAR DOORPOST	1	A
	0711604-216	BULKHEAD ASSY-REAR DOOR POST	1	B
		ATTACHING PARTS		
- 1	NAS178-8-8	RIVET-HI SHEAR	4	
- 2	NAS178-8-7	RIVET-HI SHEAR	10	
		---*---		
- 3	0711605-213	CHANNEL ASSY-REAR DOORPOST LH	1	
- 4	0711605-214	CHANNEL ASSY-REAR DOORPOST RH	1	
- 5	S1863-3	NUTPLATE TIN	2	
- 6	S1863-2	NUTPLATE TIN	3	
- 7	0711665-2	BRACKET-SEAT SUPPORT RH	1	
	0711665-1	BRACKET-SEAT SUPPORT LH	1	
- 8	0711604-11	GUSSET-LH	1	
	0711604-12	GUSSET-RH	1	
- 9	0711605-201	SPAR ASSY-REAR	1	A
	0711605-202	SPAR ASSY-REAR	1	B
-10	0512137	BRACKET-PULLEY	1	
-11	NAS680A3	NUTPLATE	1	
-12	0762047-2	GUIDE	1	A
	0762053-1	GUIDE-FLAP FOLLOW UP	1	B
-13	0711606-5	FITTING-SPAR AFT LH	1	
	0711606-6	FITTING-SPAR AFT RH	1	
-14	0422229-12	FITTING-SPAR FWD LH	1	
	0422229-13	FITTING-SPAR FWD RH	1	
-15	0711604-48	DOUBLER ASSY-LH DOORPOST	1	
	0711604-49	DOUBLER ASSY-RH DOORPOST	1	
	NAS686A3	NUTPLATE	3	
-16	0711694-15	CLUTCH ASSY-LH DOORPOST	1	
	0711694-11	CLUTCH ASSY-LH DOORPOST ALTERNATE	1	
	0711694-16	CLUTCH ASSY-RH DOORPOST	1	
	0711694-12	CLUTCH ASSY-RH DOORPOST ALTERNATE	1	
-17	0711695-10	SHIM	1	
-18	0711695-9	GUIDE	1	
		ATTACHING PARTS		
-19	NAS221-15	SCREW	3	
		---*---		
-20	0711695-11	COVER-LH CLUTCH ASSY	1	
	0711695-12	COVER-RH CLUTCH ASSY	1	
		ATTACHING PARTS		
-21	NAS221-5	SCREW	4	
		---*---		
-22	0762044-1	BRACKET	1	
-23	NAS680A4	NUTPLATE	1	
-24	0711604-53	DOUBLER-LH	1	
	0711604-52	DOUBLER-RH	1	

A---182 SERIAL 18262466 THRU 18263475
B---182 SERIAL 18263476 & ON

Fuselage (Cont)

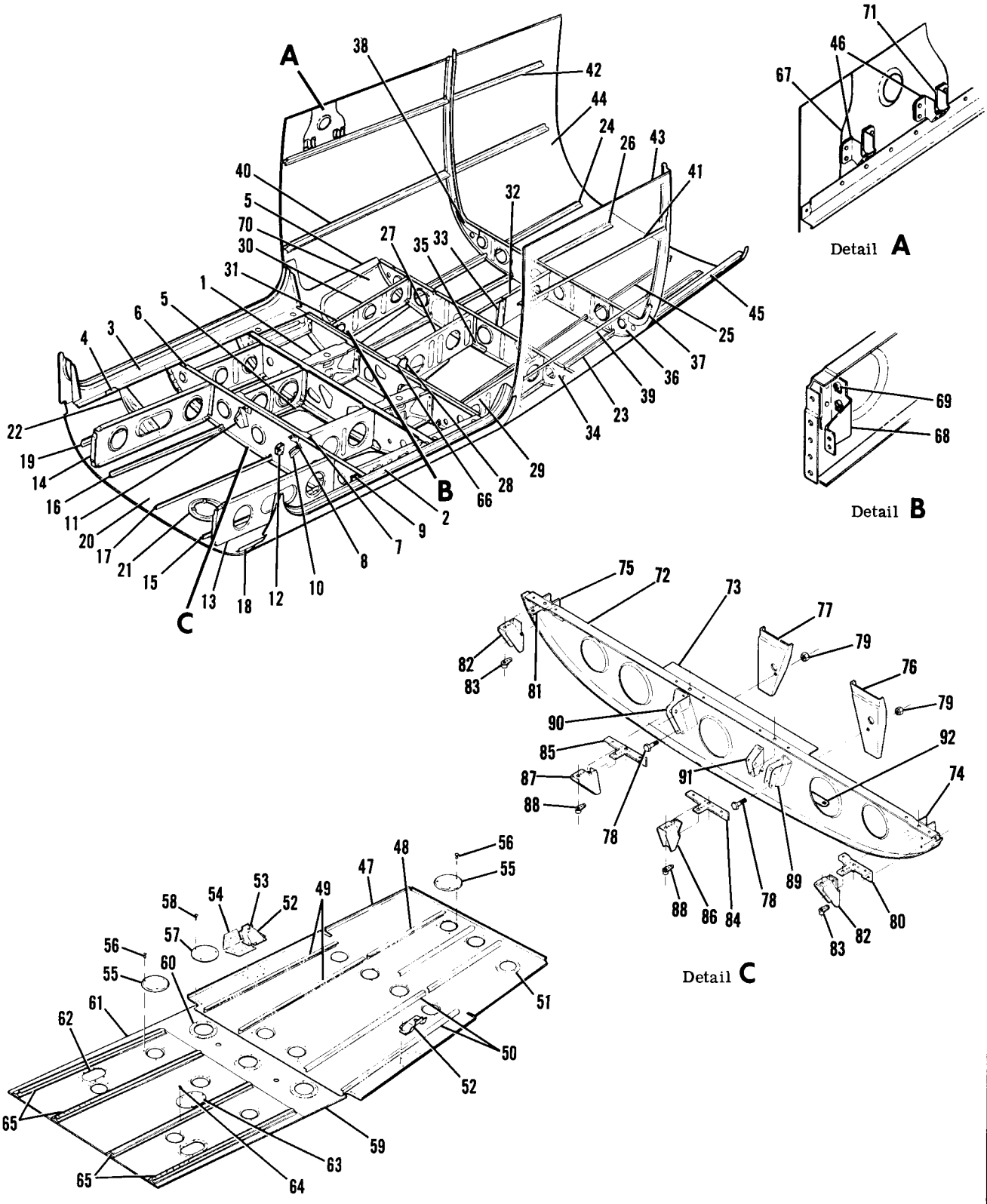

Figure 26. Lower Cabin Section Assembly

FIGURE AND INDEX NO.	PART NUMBER	DESCRIPTION 1 2 3 4 5 6 7	UNITS PER ASSY	USABLE ON CODE
26 -		LOWER CABIN SECTION ASSY	1	A
		LOWER CABIN SECTION ASSY	1	B
	0710700-4	BELLY DOUBLER-RH	1	
- 1	SEE FIG 27	BULKHEAD ASSY-LANDING GEAR STA 45.00 TO STA 65.33	1	
	0710705-1	SHIM-DOUBLER TO SKIN STA 65.33 1LH & 1RH	2	
- 2	0710606-9	SILL ASSY-LOWER CABIN DOOR LH	1	A
	0710606-15	SILL ASSY-LOWER CABIN DOOR LH	1	C
	0710036-1	SILL ASSY-LOWER CABIN DOOR LH	1	D
- 3	0710606-10	SILL ASSY-LOWER CABIN DOOR RH	1	A
	0710606-16	SILL ASSY-LOWER CABIN DOOR RH	1	C
	0710036-2	SILL ASSY-LOWER CABIN DOOR RH	1	D
- 4	0710612-6	SUPPORT-LOWER DOOR SILL RH	1	A
	0710612-8	SUPPORT-LOWER DOOR SILL RH	1	B
	0710612-5	SUPPORT-LOWER DOOR SILL LH	1	A
	0710612-7	SUPPORT-LOWER DOOR SILL LH	1	B
- 5	0710700-5	DOUBLER-FUSELAGE CENTER SECTION	1	A
- 6	0710610-7	BULKHEAD ASSY-STA 45.0	1	A
- 7	0710610-6	REINFORCEMENT-STA 45.0	1	A
- 8	0710613-1	SUPPORT-SAFETY BELT FITTING	2	A
- 9	0710656-1	SUPPORT ASSY-LH	1	A
	0710656-2	SUPPORT ASSY-RH	1	A
	NAS698A3	NUTPLATE	1	A
	NAS697A3	NUTPLATE	4	A
	0710657-1	SUPPORT	1	A
	0710657-2	BRACE	1	A
	0713702-1	CLIP-BRAKE LINE SUPPORT LH SIDE ONLY	1	A
-10	0712638-2	BRACKET-UP ELEVATOR PULLEY LH	1	A
-11	0712639-3	BRACKET-DOWN ELEVATOR PULLEY RH	1	A
		ATTACHING PARTS		
	AN3-3A	BOLT	1	A
	MS21044N3	NUT	1	A
		---*---		
-12	0412467	BRACKET-ELEVATOR TAB CONTROL PULLEY	1	A
-13	0710702-1	LONGITUDINAL BULKHEAD-LH	1	
-14	0710702-2	LONGITUDINAL BULKHEAD-RH	1	
-15	0710703-1	STRINGER-INBD LH	1	
-16	0710703-2	STRINGER-INBD RH	1	
-17	0710614-5	STRINGER-CENTER LOWER	1	
-18	0710703-3	STRINGER-OUTBD LH	1	
-19	0710703-4	STRINGER-OUTBD RH	1	
-20	0710700-2	SKIN-CENTER SECTION	1	
-21	S226-3	DOUBLER-INSPECTION PLATE	1	
	S225-1	PLATE-INSPECTION	1	
		ATTACHING PARTS		
	S1021Z8-6	SCREW	3	
	NAS395-14-3	NUTPLATE	3	
		---*---		
-22	0710704-2	BULKHEAD STUB-RH STA 36.40	1	
	0710704-1	BULKHEAD STUB-LH STA 36.40	1	
-23	0711688-11	STIFFENER-BELLY SKIN LH	1	
-24	0711688-12	STIFFENER-BELLY SKIN RH	1	
-25	0711688-17	STRINGER ASSY-BELLY LH	1	
-26	0711688-18	STRINGER ASSY-BELLY RH	1	
-27	0711614-7	BULKHEAD ASSY STA 65.33 TO STA 79.0	1	
-28	0711614-9	BRACKET	1	
-29	0711613-5	BULKHEAD-OUTBD LH STA 65.33 TO STA 79.0	1	
-30	0711613-6	BULKHEAD-OUTBD RH STA 65.33 TO STA 79.0	1	
-31	NAS680A4	NUTPLATE	2	
-32	0712759-5	BULKHEAD ASSY-SEAT SUPPORT	1	
-33	072758-1	BRACKET ASSY	1	
	NAS1068A4	NUTPLATE	2	
-34	0711611-2	BULKHEAD ASSY STA 79.00	1	
-35	0711647-1	DOUBLER	1	
-36	0711674-3	BULKHEAD ASSY STA 92.00	1	
-37	0712640-3	STIFFENER ASSY	1	
-38	0712640-4	STIFFENER ASSY	1	
	MS21044N3	NUTPLATE	1	
-39	0711688-13	STRINGER-LOWER LH	1	
-40	0711688-14	STRINGER-LOWER RH	1	
-41	0711688-7	STRINGER-LH	1	
-42	0711688-8	STRINGER-RH	1	
-43	0711800-4	SKIN-LOWER STA 65.33 TO STA 92.00 WEU 0711800-16	1	
	0711800-16	SKIN-LOWER STA 65.33 TO STA 92.00	1	
-44	0711800-3	SKIN-LOWER STA 92.00 TO STA 110.00	1	

CONTINUED ON NEXT PAGE

FIGURE AND INDEX NO.	PART NUMBER	DESCRIPTION 1 2 3 4 5 6 7	UNITS PER ASSY	USABLE ON CODE
26 -45	0711620-1	DOOR SILL-LOWER BAGGAGE	1	
-46	0700688-1	SUPPORT ASSY-ARM REST	4	
-47	0711608-14	FLOORBOARD ASSY-AFT CABIN	1	
-48	0711608-4	STRINGER	3	
-49	0711608-11	STRINGER-LH	2	
-50	0711608-12	STRINGER-RH	2	
-51	S1209-1	DOUBLER ASSY	1	
-52	0711632-7	SUPPORT ASSY-REAR SEAT	2	
-53	NAS1068A4	NUTPLATE-FLOATING	1	
-54	0712665-2	DOUBLER-RH	1	
	0712665-1	DOUBLER-LH	1	
-55	S225-1	PLATE-INSPECTION COVER	13	
		ATTACHING PARTS		
-56	S1878-1	STUD	3	
		---*---		
-57	S225-7	PLATE-INSPECTION COVER	3	
		ATTACHING PARTS		
-58	AN515-8R6	SCREW	6	
		---*---		
-59	0710609-9	FLOORBOARD ASSY-CENTER	1	
-60	S1209-1	DOUBLER ASSY	3	
	NAS680A08K	NUTPLATE	6	
-61	0710609-7	FLOORBOARD ASSY-FWD	1	A
	0710609-11	FLOORBOARD ASSY-FWD	1	B
-62	0710634-1	DOUBLER ASSY	5	
	NAS680A08K	NUTPLATE	3	
-63	0710633-1	PLATE-COVER	2	
		ATTACHING PARTS		
-64	AN515-8R7	SCREW	6	
		---*---		
-65	0710658-2	SEAT RAIL	4	
-66	0711642-2	DOUBLER-SEAT ATTACH	1	
	NAS687A3	NUTPLATE	1	
-67	0711690-6	REINFORCEMENT PLATE-RH	1	
	0711690-5	REINFORCEMENT PLATE-LH	1	
-68	0762045-3	BRACKET ASSY	1	
-69	NAS1067N3	NUTPLATE	2	
-70	0710700-4	BELLY DOUBLER-RH WEU 0710700-10	1	
	0710700-10	BELLY DOUBLER RH	1	
	0710700-3	BELLY DOUBLER-LH WEU 0710700-11	1	
	0710700-11	BELLY DOUBLER-LH	1	
-71	0715054-1	SPACER	8	
-72	0710661-1	BULKHEAD ASSY-STA 45.00	1	B
-73	0710661-3	REINFORCEMENT	1	B
-74	0710664-1	DOUBLER LH-OUTBD SEAT BELT ATTACH	1	B
-75	0710664-2	DOUBLER RH-OUTBD SEAT BELT ATTACH	1	B
-76	0710663-1	DOUBLER LH-INBD SEAT BELT ATTACH	1	B
-77	0710663-2	DOUBLER RH-INBD SEAT BELT ATTACH	1	B
		ATTACHING PARTS		
-78	AN3-4A	BOLT	1	
-79	MS21044N3	NUT	1	
		---*---		
-80	1210427-13	STIFFENER ASSY LH OUTBD-SEAT BELT ATTACH	1	B
-81	1210427-14	STIFFENER ASSY RH OUTBD-SEAT BELT ATTACH	1	B
-82	0710662-3	BRACKET OUTBD-SEAT BELT	2	B
-83	NAS696A4	NUTPLATE	2	B
-84	1210427-9	STIFFENER ASSY LH INBD-SEAT BELT ATTACH	1	B
-85	1210427-10	STIFFENER ASSY RH INBD-SEAT BELT ATTACH	1	B
-86	0710662-1	BRACKET LH INBD-SEAT BELT	1	B
-87	0710662-2	BRACKET RH INBD-SEAT BELT	1	B
-88	NAS696A4	NUTPLATE	2	B
-89	0712638-3	BRACKET-ELEVATOR PULLEY UP	1	B
-90	0712639-4	BRACKET-ELEVATOR PULLEY DOWN	1	B
-91	0713702-1	CLIP-BRAKE LINE SUPPORT LH SIDE ONLY	1	B
-92	0412467	BRACKET-ELEVATOR TAB CONTROL PULLEY	1	B

A---182 SERIAL 18262466 THRU 18263475
B---182 SERIAL 18263475 & ON
C---182 SERIAL 18263475 THRU 18264385
D---182 SERIAL 18264386 & ON

This page intentionally left blank.

Fuselage (Cont)

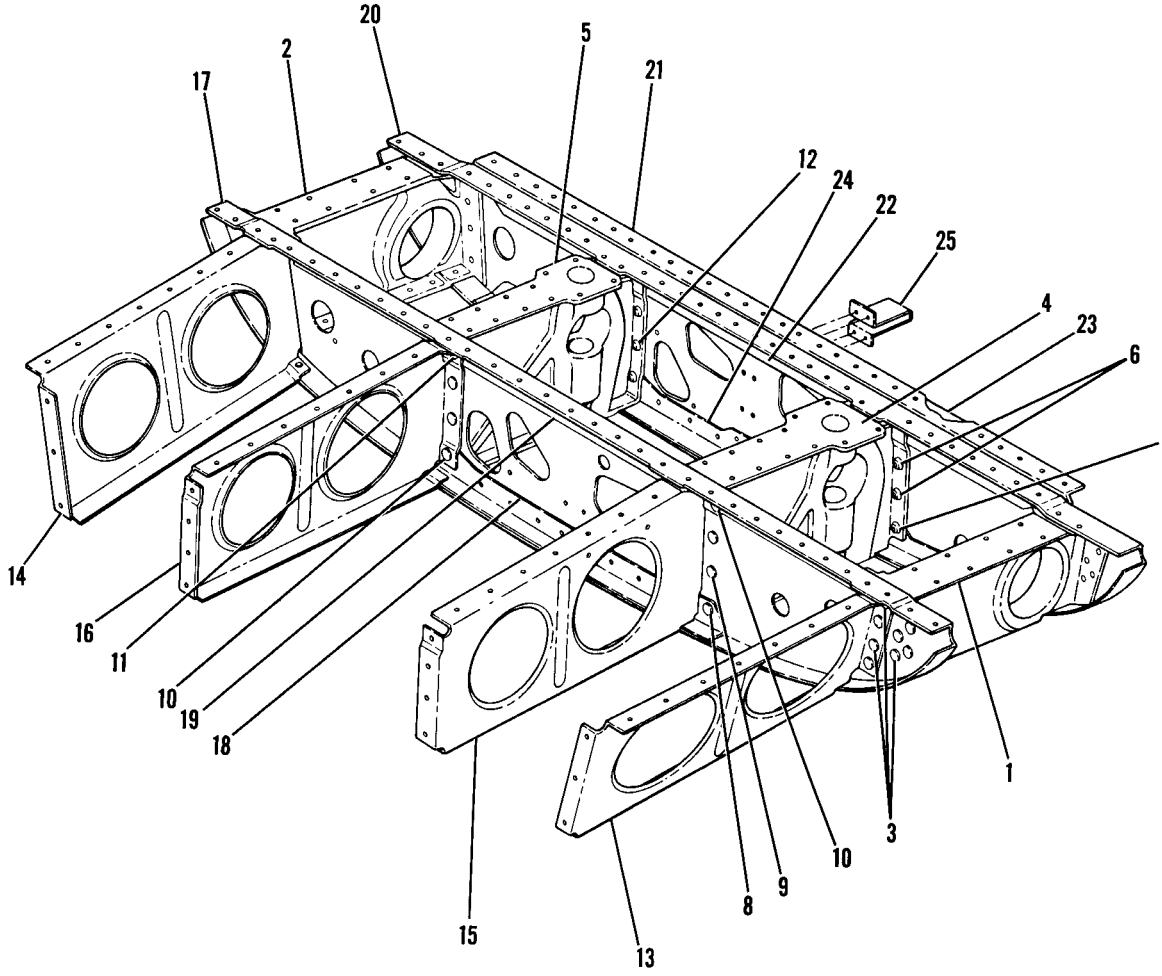

Figure 27. Landing Gear Bulkhead Assembly

FIGURE AND INDEX NO.	PART NUMBER	DESCRIPTION 1 2 3 4 5 6 7	UNITS PER ASSY	USABLE ON CODE
27 -	0710700-200	BULKHEAD ASSEMBLY-LANDING GEAR STA.45.00 TO STA.65.33	1	
- 1	0741627-1	SUPPORT-OUTBOARD LANDING GEAR LH	1	
- 2	0741627-2	SUPPORT-OUTBOARD LANDING GEAR RH	1	
		ATTACHING PARTS		
- 3	NAS1054-8-6	RIVET-HI SHEAR FORWARD	8	
	NAS179-8	COLLAR	8	
		---*---		
- 4	0741626-1	SUPPORT-INBOARD LANDING GEAR LH	1	
- 5	0741626-2	SUPPORT-INBOARD LANDING GEAR RH	1	
		ATTACHING PARTS		
- 6	NAS1054-8-8	RIVET-HI SHEAR MIDDLE AFT	4	
- 7	NAS1054-8-12	RIVET-HI SHEAR 2 UPPER & 2 LOWER AFT	4	
- 8	NAS1054-8-8	RIVET-HI SHEAR OUTBOARD FORWARD	1	
- 9	NAS1054-8-6	RIVET-HI SHEAR MIDDLE FORWARD	4	
-10	NAS1054-8-9	RIVET-HI SHEAR UPPER OUTBOAD & LOWER INBOARD FORWARD	2	
-11	NAS1054-8-10	RIVET-HI SHEAR UPPER INBOARD FORWARD	1	
-12	NAS179-8	COLLAR	16	
		---*---		
-13	0710616-1	BULKHEAD-OUTBOARD LH	1	
-14	0710616-2	BULKHEAD-OUTBOARD RH	1	
-15	0710615-1	BULKHEAD-INBOARD LH	1	
-16	0710615-2	BULKHEAD-INBOARD RH	1	
-17	0710611-4	BULKHEAD ASSEMBLY-STA 56.70	1	
-18	0710608-1	REINFORCEMENT	1	
-19	0710611-3	ANGLE	1	
	0710701-1	BULKHEAD ASSEMBLY-STA 65.33	1	
-20	0710701-2	BULKHEAD-FORWARD	1	
-21	0710701-3	BULKHEAD-AFT	1	
-22	0710701-4	REINFORCEMENT-UPPER FORWARD	1	
-23	0710701-5	REINFORCEMENT-UPPER AFT	1	
-24	0710701-6	REINFORCEMENT-LOWER FORWARD	1	
	0710701-7	REINFORCEMENT-LOWER AFT	1	
-25	0762043-2	BRACKET-PULLEY	1	

Fuselage (Cont)

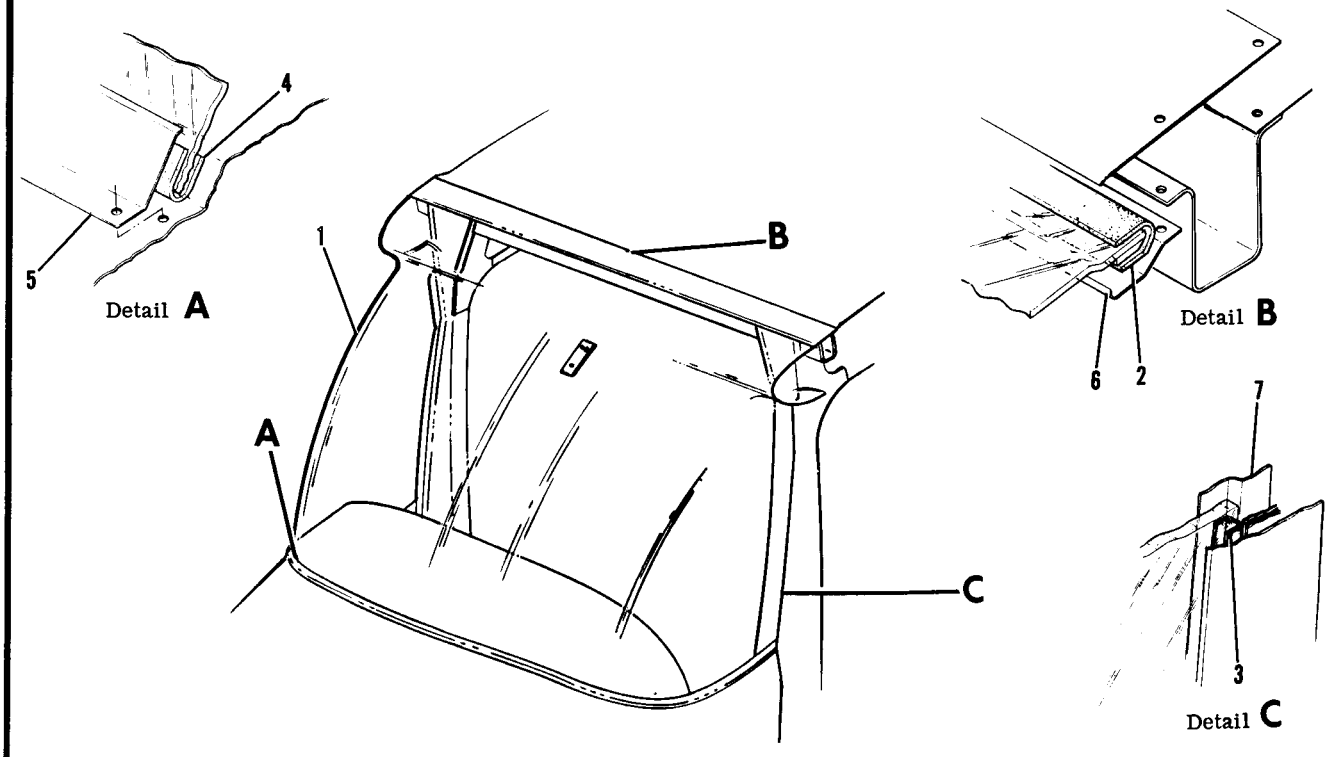

Figure 28. Windshield Installation

FIGURE AND INDEX NO.	PART NUMBER	DESCRIPTION 1 2 3 4 5 6 7	UNITS PER ASSY	USABLE ON CODE
28 -		WINDSHIELD INSTALLATION	NP	A
- 1	0713334-2	WINDSHIELD ASSEMBLY-TINTED	1	B
	0713538-1	WINDSHIELD ASSEMBLY-TINTED	1	C
	0713287-11	WINDSHIELD ASSEMBLY-CLEAR	1	
- 2	S1389-2	SEAL-UPPER 46.50 IN LG BULK ITEM REF S1389-2-46.50	1	
- 3	S1389-7	SEAL-SIDE 18.50 IN LG BULK ITEM REF S1389-7-18.50	2	
- 4	S1389-2	SEAL-LOWER 77.50 IN LG BULK ITEM REF S1389-2-77.50	1	
- 5	0713788-3	RETAINER-WINDSHIELD	1	
- 6	0713822-1	RETAINER-WINDSHIELD	1	
- 7	0713609-5	RETAINER-INNER LH	1	
	0713609-6	RETAINER-INNER RH	1	
		A---182 SERIAL 18262446 & ON		
		B---182 SERIAL 18262446 THRU 18264295		
		C---182 SERIAL 18264296 & ON		

This page intentionally left blank.

Fuselage (Cont)

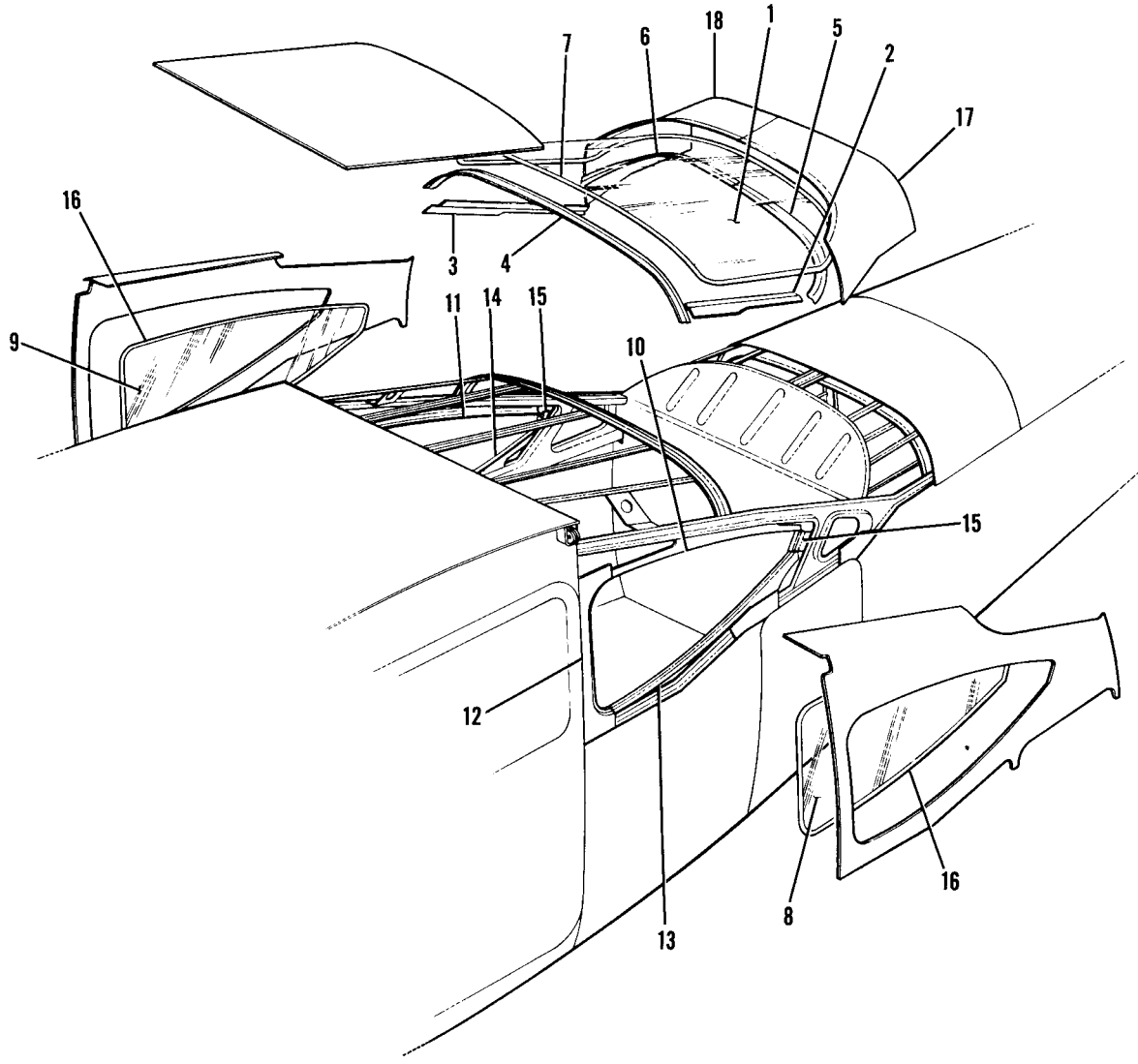

Figure 29. Aft Cabin Windows Installation

FIGURE AND INDEX NO.	PART NUMBER	DESCRIPTION 1 2 3 4 5 6 7	UNITS PER ASSY	USABLE ON CODE
29 -		AFT CABIN WINDOWS INSTALLATION	NP	
- 1	0711800-10	WINDOW-REAR	1	
		ATTACHING PARTS		
- 2	0711681-3	RETAINER-LH	1	
- 3	0711681-4	RETAINER-RH	1	
- 4	0711681-1	RETAINER-UPPER FWD	1	
- 5	0712651-1	RETAINER-REAR LH	1	
- 6	0712651-2	RETAINER-REAR RH	1	
		---*---		
- 7	S1389-1	SEAL-WINDOW	1	
- 8	0711800-11	WINDOW-LH SIDE	1	
- 9	0711800-12	WINDOW-RH SIDE	1	
		ATTACHING PARTS		
-10	0711680-3	RETAINER-LH UPPER	1	
	0700705-3	RETAINER ASSY-HEADLINER LH	1	
-11	0711680-4	RETAINER-RH UPPER	1	
	0700705-4	RETAINER ASSY-HEADLINER RH	1	
-12	0711615-1	RETAINER-LH FORWARD	1	
	0711615-2	RETAINER-RH FORWARD	1	
-13	0711680-1	RETAINER-LH LOWER	1	
-14	0711680-2	RETAINER-RH LOWER	1	
-15	0711680-5	RETAINER-AFT	2	
		---*---		
-16	S1166-1	SEAL-WINDOW 79.0 IN LG BULK ITEM REF S1166-1-79.0	2	
-17	0711800-7	SKIN-LH	1	
-18	0711800-8	SKIN-RH	1	

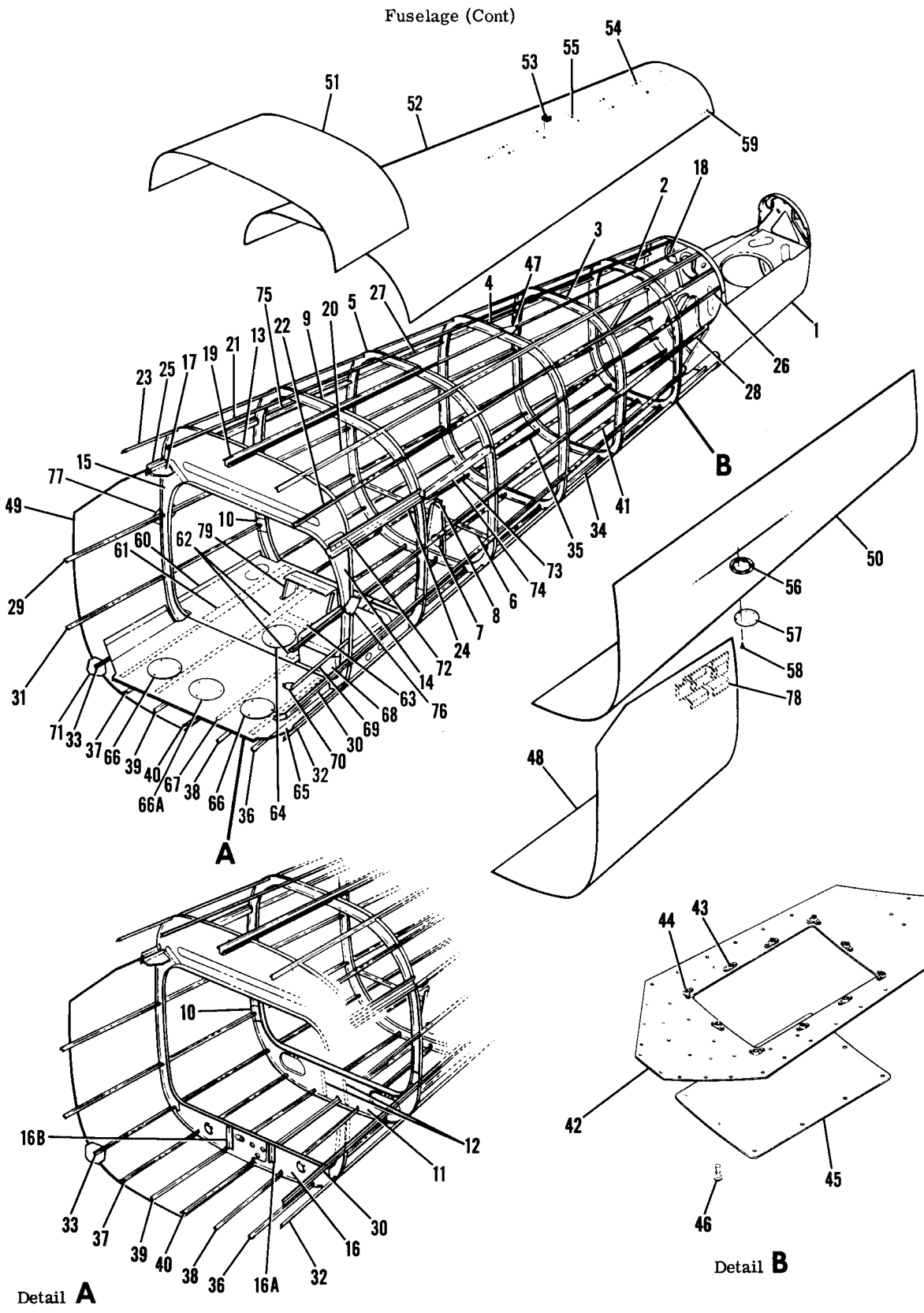

Figure 30. Tailcone Assembly - Extended Baggage Compartment

[redacted]

-20	0712653-1	STRINGER-LH	1
-21	0712653-2	STRINGER-RH	1
-22	0712653-3	STRINGER-LH	1
-23	0712653-4	STRINGER-RH	1
-24	0712647-3	STRINGER-LH	1
-25	0712647-4	STRINGER-RH	1
-26	0712627-13	STRINGER-LH	1
-27	0712627-14	STRINGER-RH	1
-28	0712627-11	STRINGER-LH	1
-29	0712627-12	STRINGER-RH	1
-30	0712627-9	STRINGER-LH	1
-31	0712627-10	STRINGER-RH	1
-32	0712627-25	STRINGER-LH	1
-33	0712627-26	STRINGER-RH	1
-34	0712627-5	STRINGER-LH AFT	1
-35	0712627-6	STRINGER-RH AFT	1
-36	0712627-3	STRINGER-LH FWD	1
-37	0712627-4	STRINGER-RH FWD	1
-38	0712627-1	STRINGER-LH	1
-39	0712627-2	STRINGER-RH	1
-40	0712627-21	STRINGER-BOTTOM FORWARD	1
-41	0712627-22	STRINGER-BOTTOM AFT	1
-42	0712607-8	DOUBLER-ACCESS DOOR	1
-43	NAS697A08	NUTPLATE	6
-44	NAS698A08	NUTPLATE	4
-45	0712607-9	DOOR-ACCESS	1
		ATTACHING PARTS	
-46	NAS220-5	SCREW	10
		---*---	
-47	0712527-1	DOUBLER	1

CONTINUED ON NEXT PAGE

FIGURE AND INDEX NO.	PART NUMBER	DESCRIPTION 1 2 3 4 5 6 7	UNITS PER ASSY	USABLE ON CODE
30 -48	0712504-7	SKIN-LOWER FORWARD LH	1	
-49	0712504-4	SKIN-LOWER FORWARD R.H.	1	
-50	0712504-5	SKIN-LOWER AFT LH	1	
	0712504-6	SKIN-LOWER AFT RH	1	
-51	0712504-3	SKIN-UPPER FORWARD	1	
-52	0712504-10	SKIN-UPPER AFT	1	
-53	1231052-1	BRACKET ASSY-DORSAL FIN	1	
	NAS686A08	NUTPLATE	2	
-54	NAS680A08K	NUTPLATE	14	
-55	NAS696A08K	NUTPLATE	1	
	NAS698A08K	NUTPLATE	1	
-56	S1048-2	DOUBLER ASSEMBLY	1	
	NAS395-14-3	NUTPLATE	6	
-57	S225-5	PLATE INSPECTION	1	
		ATTACHING PARTS		
-58	S1021Z8-6	SCREW	6	
		---*---		
-59	S1862-1	NUTPLATE TIN	6	
-60	0712506-1	SHELF ASSEMBLY-RADIO	1	
-61	0712507-1	STIFFENER	1	
-62	0712507-2	STIFFENER	2	
-63	0712626-4	STIFFENER	1	
	S1741-1	ANCHOR	3	
	NAS1329A06K75	NUT	4	
-64	S225-1	PLATE	1	
		ATTACHING PARTS		
	S1878-1	STUD UC	3	
		---*---		
-65	0712514-1	FLOORBOARD ASSEMBLY	1	
-66	S225-1	PLATE	2	
		ATTACHING PARTS		
	S1878-1	STUD UC	3	
		---*---		
-66A	S225-7	PLATE	1	
		ATTACHING PARTS		
	S1878-1	STUD	3	
		---*---		
-67	0712510-1	STIFFENER	4	
-68	SEE FIG 31	BATTERY BOX INSTALLATION	1	
-69	0712509-1	STIFFENER-LH	1	
-70	0712515-1	GUSSET-LH	1	
-71	0712607-6	GUSSET-RH	1	
-72	CR163-4-4	RIVET-CHERRY	4	
-73	CR163-4-2	RIVET-CHERRY	9	
-74	0712520-1	STIFFENER-LH	1	
-75	0712520-2	STIFFENER-RH	1	
-76	0712519-1	GUSSET-LH	1	
-77	0712519-2	GUSSET-RH	1	
-78	1260474-1	BRACKET-ELT MOUNTING	1	
-79	0712530-1	BRACKET ASSY-HAT SHELF SUPPORT	1	B
		ATTACHING PARTS		
	AN515-6R8	SCREW	4	
		---*---		

A---182 SERIAL 18262466 & ON
B---182 SERIAL 18263476 & ON

This page intentionally left blank.

Fuselage (Cont)

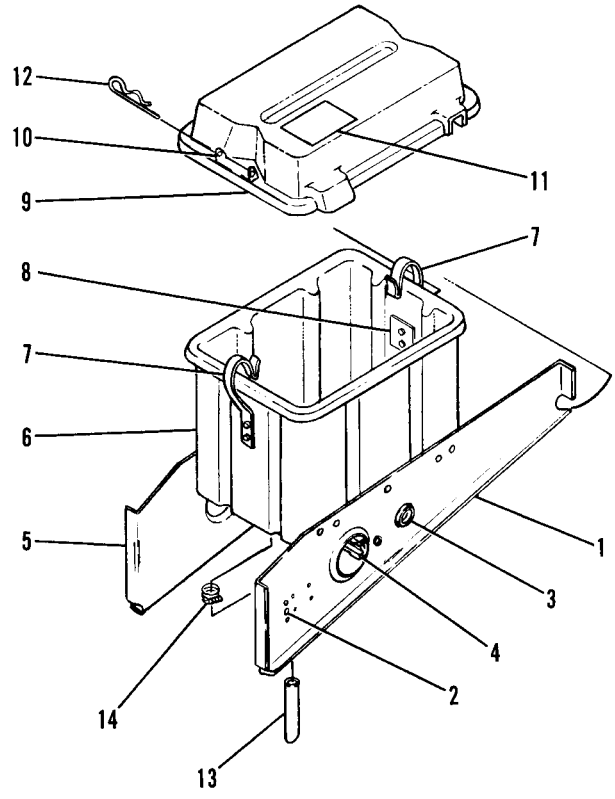

Figure 31. Battery Box Installation

FIGURE AND INDEX NO.	PART NUMBER	DESCRIPTION 1 2 3 4 5 6 7	UNITS PER ASSY	USABLE ON CODE
31 -		BATTERY BOX INSTALLATION	NP	
- 1	0712513-1	BULKHEAD ASSY LH-BATTERY BOX	1	
- 2	NAS680A4	NUTPLATE	1	
- 3	MS35489-9S	GROMMET	1	
- 4	S2034-1	MOUNT-BATTERY CABLE	1	
		ATTACHING PARTS		
	S1022Z8-8	SCREW	1	
		---*---		
- 5	0712513-4	BULKHEAD ASSY RH-BATTERY BOX	1	
	S2034-1	MOUNT-BATTERY CABLE	1	
		ATTACHING PARTS		
	S1022Z8-8	SCREW	1	
		---*---		
	0512167-30	BOX ASSY-BATTERY	1	
- 6	0512167-29	BASE ASSY-BATTERY BOX	1	
- 7	0512167-10	LATCH-SPRING	2	
- 8	0512167-17	PLATE-BACKING	2	
- 9	0512167-27	COVER ASSY-BATTERY BOX	1	
-10	0413307-13	CATCH	2	
-11	1205024-1	PLACARD	1	
-12	AN415-2	PIN-LATCH	2	
-13	S1495-6	HOSE-DRAIN 2.75 IN LG BKI REF S1495-6-2.75	1	
		ATTACHING PARTS		
-14	NAS397-10	CLAMP	1	
		---*---		

Fuselage (Cont)

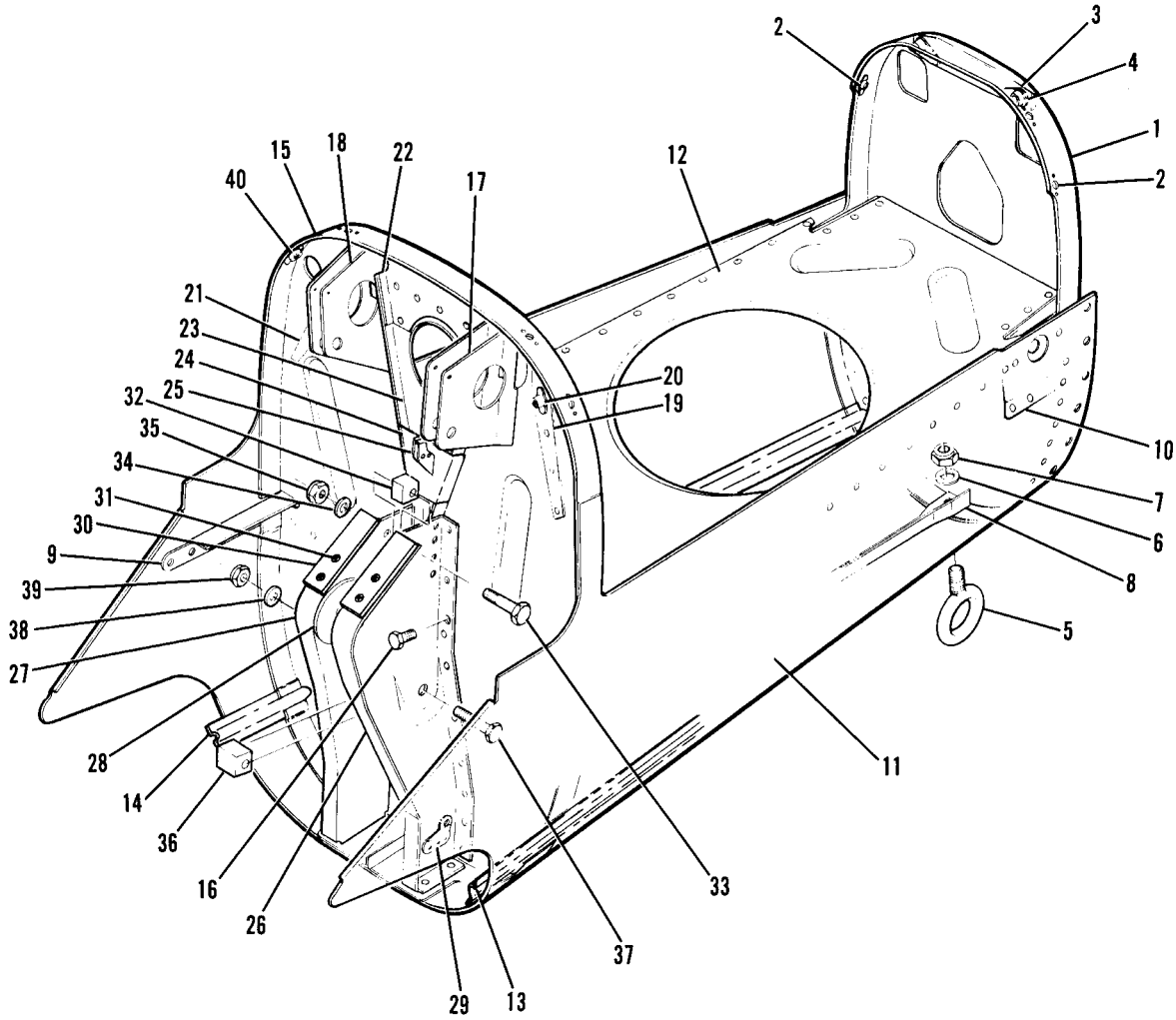

Figure 32. Aft Tailcone Assembly Sta. 209.00 to 230.187

FIGURE AND INDEX NO.	PART NUMBER	DESCRIPTION 1 2 3 4 5 6 7	UNITS PER ASSY	USABLE ON CODE
32 -	0712525-2	AFT TAILCONE ASSY-FUSELAGE STA 209.00 TO STA 230.187	1	
- 1	0712523-1	BULKHEAD ASSY-FUSELAGE STA 230.187	1	
- 2	NAS697A08	NUTPLATE	4	
- 3	0712528-1	DOUBLER ASSY	1	
- 4	NAS696A3	NUTPLATE	2	
- 5	0422344	EYEBOLT-MOORING	1	
		ATTACHING PARTS		
- 6	AN960-516L	WASHER	1	
- 7	MS21042L5	NUT	1	
		---*---		
- 8	0712619-2	STRINGER-AFT TAILCONE	1	
- 9	0712618-4	ANGLE-BULKHEAD SUPPORT RH	1	
	0712618-3	ANGLE-BULKHEAD SUPPORT LH	1	
-10	0712524-1	BRACKET LH-STABILIZER ATTACH	1	
	0712524-2	BRACKET RH-STABILIZER ATTACH	1	
-11	0712525-3	SKIN-AFT TAILCONE	1	
-12	0712522-1	BULKHEAD ASSY-HORIZONTAL	1	
	0712522-3	SUPPORT ASSEMBLY	1	
	NAS680A3	NUTPLATE	2	
-13	0712526-1	STRINGER-AFT TAILCONE LH	1	
-14	0712526-2	STRINGER-AFT TAILCONE RH	1	
-15	0712615-3	BULKHEAD ASSY-FUSELAGE STA 209.00	1	
		ATTACHING PARTS		
-16	AN3-5A	BOLT	2	
	AN960-10	WASHER	2	
		---*---		
-17	0760621-1	BRACKET-PULLEY LH	1	
-18	0760621-2	BRACKET-PULLEY RH	1	
		ATTACHING PARTS		
	AN3-3A	BOLT	1	
	MS21044N3	NUT	1	
		---*---		
-19	1212127-1	DOUBLER ASSY-FWD 1 RH & 1 LH	2	
-20	NAS697A4	NUTPLATE	1	
-21	1212127-3	DOUBLER-AFT 1 RH & 1 LH	2	
-22	1212126-1	DOUBLER-BULKHEAD	1	
-23	0712521-1	DOUBLER-FIN SUPPORT	1	
-24	0712636-1	SUPPORT-PULLEY BRACKET	1	
-25	0412467	BRACKET-ELEVATOR TAB CONTROL PULLEY	1	
-26	0712621-7	BRACKET ASSY-ELEVATOR BELLCRANK LH	1	
-27	0712621-8	BRACKET ASSY-ELEVATOR BELLCRANK RH	1	
-28	0712306-5	DOUBLER	1	
-29	0712650-1	BRACKET-ELEVATOR SPRING	1	
-30	0760129-1	STRIP	2	
		ATTACHING PARTS		
-31	AN515-6R6	SCREW	2	
	MS21044N06	NUT	2	
		---*---		
-32	0510146-8	SPACER-RUDDER BELLCRANK STOP	1	
		ATTACHING PARTS		
-33	AN4-12A	BOLT	1	
-34	AN960-416	WASHER	1	
-35	MS21042L4	NUT	1	
		---*---		
-36	0510146-3	SPACER-RUDDER BELLCRANK STOP	1	
		ATTACHING PARTS		
-37	AN4-14A	BOLT	1	
-38	AN960-416	WASHER	1	
-39	MS21042L4	NUT	1	
		---*---		
-40	NAS697A08	NUTPLATE	4	

Fuselage (Cont)

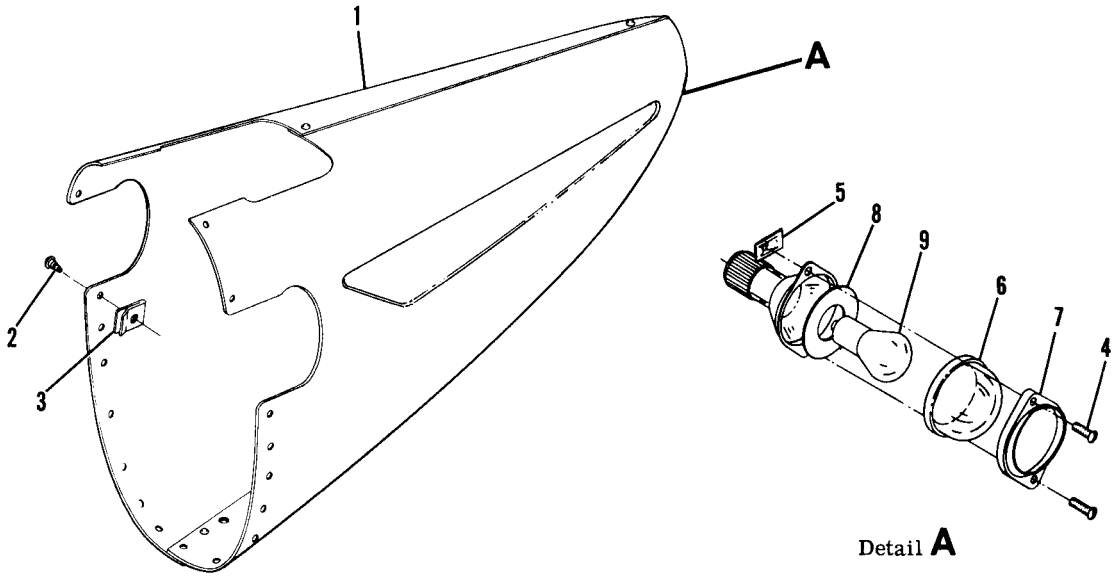

Figure 33. Stinger Installation

FIGURE AND INDEX NO.	PART NUMBER	DESCRIPTION 1 2 3 4 5 6 7	UNITS PER ASSY	USABLE ON CODE
33 -		STINGER INSTALLATION	NP	
- 1	1212010-11-791	STINGER ASSY	1	
		ATTACHING PARTS		
- 2	S1021Z8-8	SCREW	15	
- 3	NAS395-14-3	NUT	15	
		---*---		
	C622001-0102	LIGHT ASSY-TAIL	1	
		ATTACHING PARTS		
- 4	AN530-6R10	SCREW	2	
- 5	NAS488-5-3	NUT	2	
		---*---		
- 6	A4513-1	LENS-CLEAR GMC	1	
- 7	C622001-0104	RETAINER-LENS GMC	1	
- 8	A2109-3	GASKET GMC	1	
- 9	1777	LAMP	1	

This page intentionally left blank.

Alighting Gear

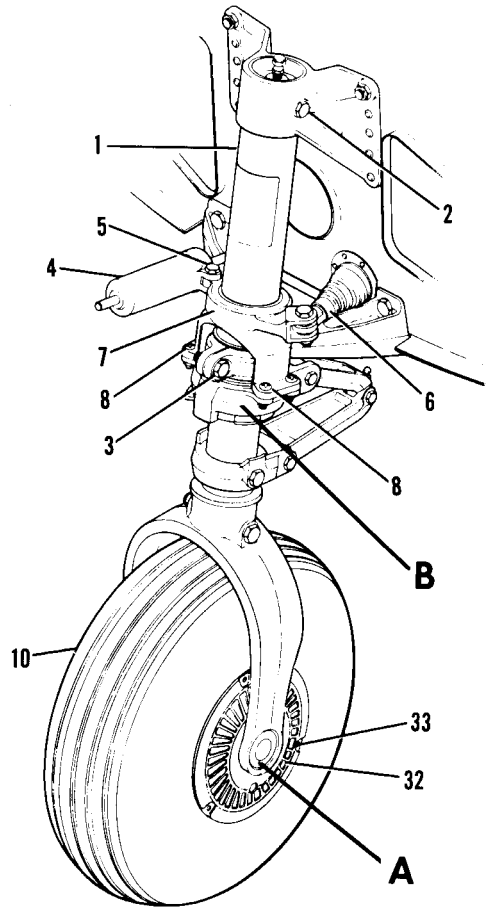

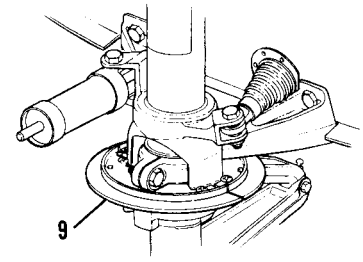

Detail **B**

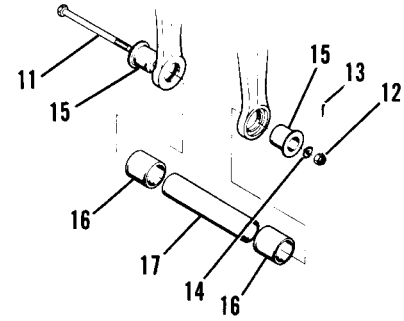

Detail **A**

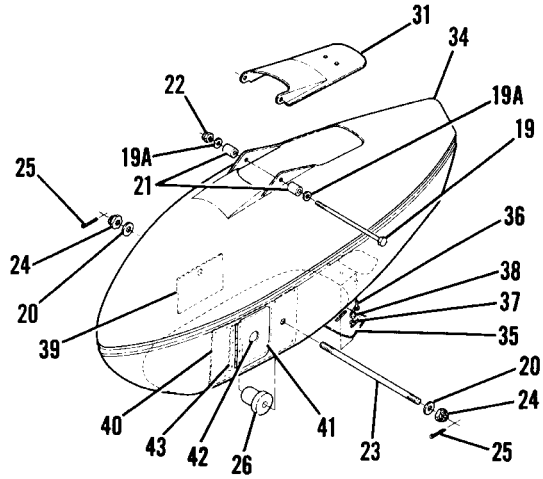

18263476 & ON

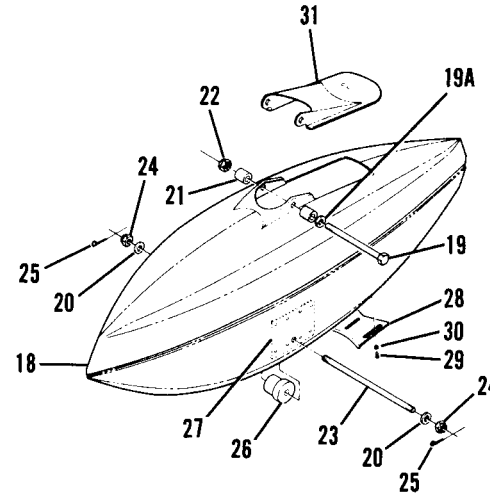

18262466 THRU 18263475

Figure 34. Nose Gear Installation

FIGURE AND INDEX NO.	PART NUMBER	DESCRIPTION 1 2 3 4 5 6 7	UNITS PER ASSY	USABLE ON CODE
34 -		NOSE GEAR INSTALLATION	NP	A
- 1	SEE FIG 36	SHOCK STRUT ASSY-NOSE GEAR	1	
		ATTACHING PARTS		
- 2	AN5-31A	BOLT	1	
	MS21042L5	NUT	2	
	AN960-516	WASHER	2	
- 3	AN5-10A	BOLT	1	
		---*---		
- 4	SEE FIG 39	DAMPENER ASSY-SHIMMY	1	
		ATTACHING PARTS		
- 5	AN4-7A	BOLT	2	
	AN960D416L	WASHER	AR	
	NAS75-4-10	BUSHING	2	
	MS20392-2C31	PIN	1	
	MS24665-132	PIN-COTTER	1	
		---*---		
- 6	SEE FIG 35	STEERING SYSTEM INSTALLATION-NOSE GEAR	NP	
- 7	0743604-6	TORQUE ARM ASSY-NOSE GEAR STEERING	1	
		ATTACHING PARTS		
- 8	NAS221-13	SCREW	4	
	AN960-10	WASHER	4	
	MS21044N3	NUT	4	
		---*---		
	GNB4012	BEARING TOR	1	
	GNB40120H	BEARING TOR ALTERNATE	1	
- 9	0743628-1	CLOSURE ASSY-NOSE GEAR	1	
-10	SEE FIG 37	WHEEL ASSY-NOSE GEAR	NP	
	SEE FIG 38	WHEEL ASSY-NOSE GEAR ALTERNATE	NP	
		ATTACHING PARTS		
-11	AN5-47	BOLT	1	
-12	AN310-5	NUT	1	
-13	MS24665-134	PIN-COTTER	1	
-14	AN960-516L	WASHER	1	
-15	0543001	FERRULE-AXLE BOLT	2	
-16	0543037-1	SPACER-AXLE	2	
-17	0543003	TUBE-AXLE	1	
		---*---		
-18	0543065-1	SPEED FAIRING ASSY-NOSE GEAR	1	B
		ATTACHING PARTS		
-19	AN5-51A	BOLT	1	
-19A	AN960-516L	WASHER	AR	
-20	S1450-5-12-035	WASHER	2	
-21	0743009-1	SPACER	2	
-22	MS21042L5	NUT	1	
-23	0742410-27	STUD	1	
-24	AN310-5	NUT	2	
-25	MS24665-136	PIN-COTTER	2	
-26	0742410-8	FERRULE	2	
		---*---		
-27	0541207-2	DOUBLER	2	B
-28	0541205-2	SCRAPER	1	B
		ATTACHING PARTS		
-29	AN520-10R6	SCREW	3	
-30	AN960-10	WASHER	3	
	MS21044N3	NUT	3	
		---*---		
-31	0743625-15	COVER PLATE ASSY	1	B
-32	0743627-5	HUB CAP-NOSE GEAR VALVE STEM SIDE	1	
	0743627-6	HUB CAP-NOSE GEAR	1	
		ATTACHING PARTS		
-33	S2191-8-4	SCREW	3	
	AN936A8	WASHER	3	
		---*---		
	6241M	EXTENSION VALVE	1	
	6241B	EXTENSION VALVE DL USED WITH ALT WHEEL	1	
	3680C	EXTENSION VALVE SV ALTERNATE	1	

CONTINUED ON NEXT PAGE

FIGURE AND INDEX NO.	PART NUMBER	DESCRIPTION 1 2 3 4 5 6 7	UNITS PER ASSY	USABLE ON CODE
34 -34	0543079-7	SPEED FAIRING ASSY-NOSE GEAR	1	C
-35	0541221-2	SCRAPER	1	C
		ATTACHING PARTS		
-36	AN520-10R12	SCREW	3	C
-37	AN960-10	WASHER	6	C
-38	MS21044N3	NUT	3	C
		---*---		
-39	0541207-3	DOUBLER	1	C
-40	0541222-5	DOUBLER	1	C
-41	0541223-13	ACCESS DOOR ASSY	1	C
-42	KM610-64	LATCH-ACCESS DOOR	1	C
-43	0541223-15	HINGE ASSY	1	C
	0541223-11	HINGE HALF ATTACH TO FAIRING	1	C
	0541223-12	HINGE HALF ATTACH TO DOOR	1	C
	MS20253P2	HINGE PIN	1	C
		A---182 SERIAL 18262466 & ON		
		B---182 SERIAL 18262466 THRU 18263475		
		C---182 SERIAL 18263476 & ON		

This page intentionally left blank.

Alighting Gear (Cont)

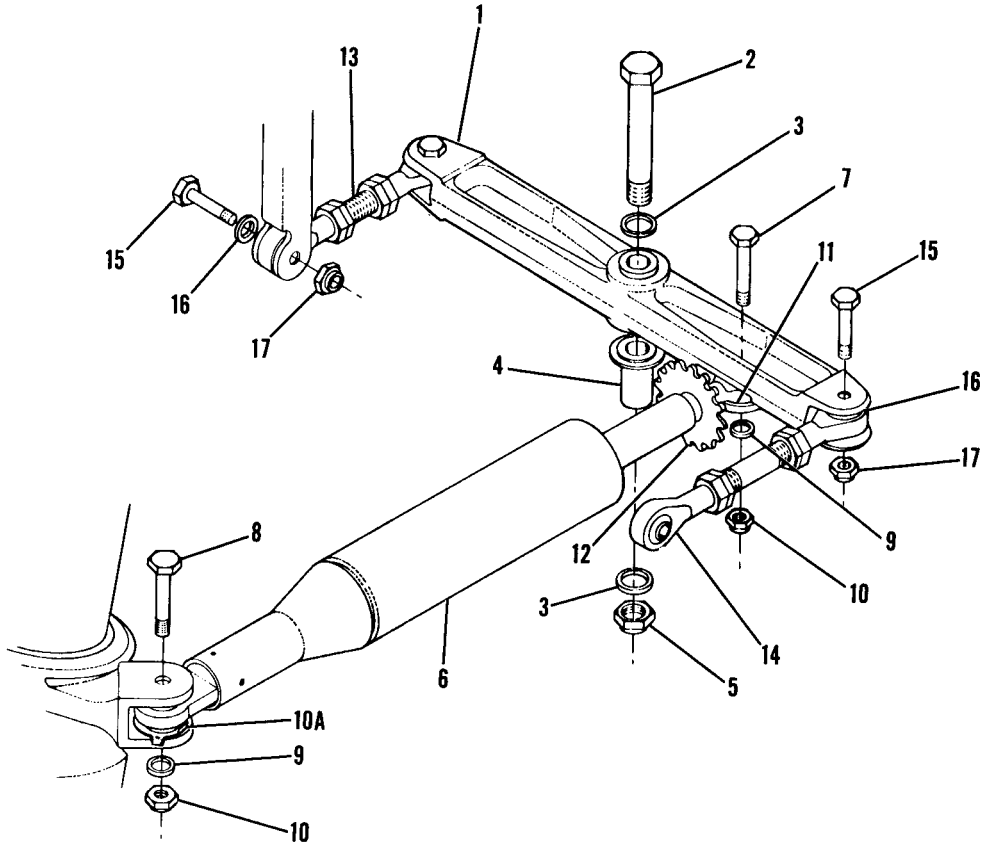

Figure 35. Nose Gear Steering System Installation

FIGURE AND INDEX NO.	PART NUMBER	DESCRIPTION 1 2 3 4 5 6 7	UNITS PER ASSY	USABLE ON CODE
35 -		STEERING SYSTEM INSTALLATION-NOSE GEAR	NP	
- 1	0743602-1	BELLCRANK ASSEMBLY	1	
		ATTACHING PARTS		
- 2	NAS464P6LA32	BOLT	1	
- 3	AN960-616	WASHER	2	
- 4	0743610-1	BUSHING	1	
- 5	MS21042L6	NUT	1	
		---*---		
- 6	0760622-1	BUNGEE ASSEMBLY	1	
		ATTACHING PARTS		
- 7	AN173-12A	BOLT	1	
- 8	AN173-12A	BOLT	1	
- 9	AN960-10	WASHER	2	
-10	MS21044N3	NUT	2	
-10A	0760660-1	POSITIONER	1	
		---*---		
-11	M34-14	BEARING HEC	1	
-12	0760630-1	SPROCKET	1	
		ATTACHING PARTS		
	NAS561-4-6	PIN	1	
		---*---		
-13	0743608-1	ROD ASSEMBLY-PUSH-PULL RH	1	
-14	0743608-2	ROD ASSEMBLY-PUSH-PULL LH	1	
		ATTACHING PARTS		
-15	AN173-12A	BOLT	2	
-16	AN960-10L	WASHER	2	
-17	MS21044N3	NUT	2	
		---*---		

Alighting Gear (Cont)

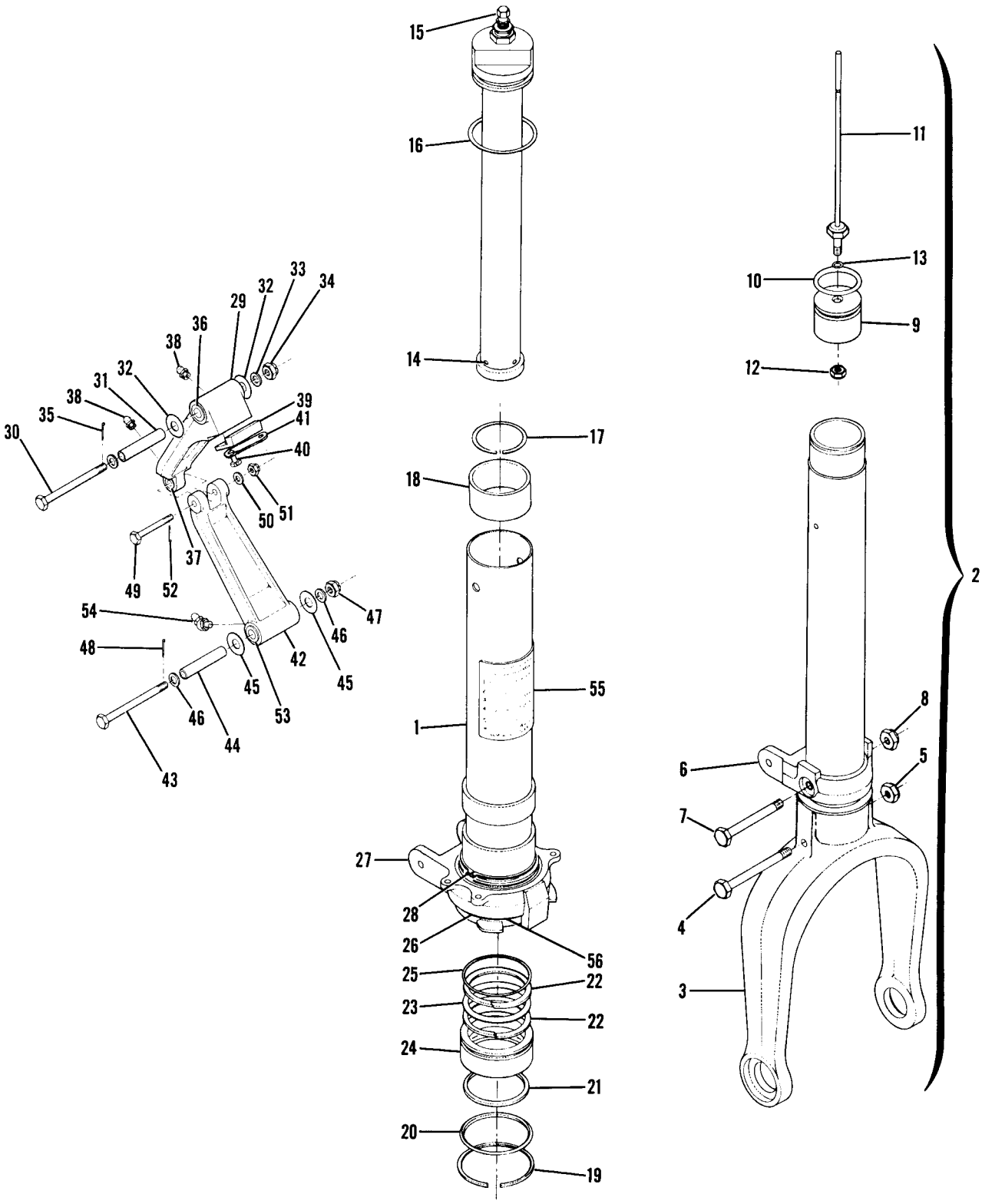

Figure 36. Nose Gear Shock Strut Assembly

FIGURE AND INDEX NO.	PART NUMBER	DESCRIPTION 1 2 3 4 5 6 7	UNITS PER ASSY	USABLE ON CODE
36 -		SHOCK STRUT ASSY-NOSE GEAR	1	
- 1	0743607-1	TUBE ASSY-SHOCK STRUT	1	
- 2	0743621-4	SHOCK STRUT ASSY-LOWER	1	
- 3		FORK & BARREL ASSY	NP	
	SK182-34	FORK-NOSE GEAR REPLACEMENT KIT	1	
		ATTACHING PARTS		
- 4	AN5-33A	BOLT	1	
- 5	MS21042L5	NUT	1	
		---*---		
- 6		FITTING-TORQUE LINK	NP	
		ATTACHING PARTS		
- 7	AN5-27A	BOLT	1	
- 8	MS21042L5	NUT	1	
		---*---		
- 9	0743612-1	BASE-METERING PIN	1	
-10	AN6227B26	O RING	1	
-11	0743626-5	METERING PIN ASSY	1	
		ATTACHING PARTS		
-12	MS21042L4	NUT	1	
-13	AN6227B5	O RING	1	
		---*---		
-14	0743621-9	ORIFICE PISTON SUPPORT ASSY	1	
-15	S1827-1	VALVE ASSY	1	
-16	AN6230B3	O RING	1	
-17	0841200-19	LOCK RING	1	
-18	1243021-1	BEARING	1	
-19	0841200-25	LOCK RING	1	
-20	0841200-15	RING-PACK RETAINER	1	
-21	S11065-21	RING-SCRAPER SHWS	1	
-22	S1628-329	RING-BACKUP	2	
-23	AN6227B32	O RING	1	
-24	1243626-1	RING-PACK SUPPORT	1	
-25	AN6230B6	O RING	1	
-26	0543029	WASHER	1	
-27	0743601-1	COLLAR ASSY	1	
-28	MS16624-1275	RETAINING RING	1	
-29	0442506-12	LINK ASSY-TORQUE UPPER	1	
		ATTACHING PARTS		
-30	AN4-31	BOLT	1	
-31	0543047-1	SPACER	1	
-32	0543048-1	SHIM	AR	
-33	AN960-416L	WASHER	AR	
-34	AN310-4	NUT	1	
-35	MS24665-134	PIN-COTTER	1	
		---*---		
-36	NAS77-6-88	BUSHING	2	
-37	NAS77-3-23	BUSHING	2	
-38	AN944-101A	FITTING-LUBRICATOR	2	
-39	0442506-11	STOP PLUG	1	
-40	AN3H3A	BOLT	2	
-41	0442506-9	SAFETY PLUG	1	
-42	0442506-2	LINK ASSY-TORQUE LOWER	1	
		ATTACHING PARTS		
-43	AN4-31	BOLT	1	
-44	0543047-1	SPACER	1	
-45	0543048-1	SHIM	AR	
-46	AN960-416L	WASHER	AR	
-47	AN310-4	NUT	1	
-48	MS24665-134	PIN-COTTER	1	
-49	NAS464-3-22	BOLT	1	
-50	AN960-10L	WASHER	1	
-51	AN310-3	NUT	1	
-52	MS24665-132	PIN-COTTER	1	
		---*---		
-53	NAS77-6-88	BUSHING	2	
-54	MS15002-3	FITTING-LUBRICATOR	1	
-55	0543032-3	PLACARD	1	
-56	1243030-5	SHIM .006 THICK	AR	
	1243030-6	SHIM .012 THICK	AR	
	1243030-7	SHIM .020 THICK	AR	

Alighting Gear (Cont)

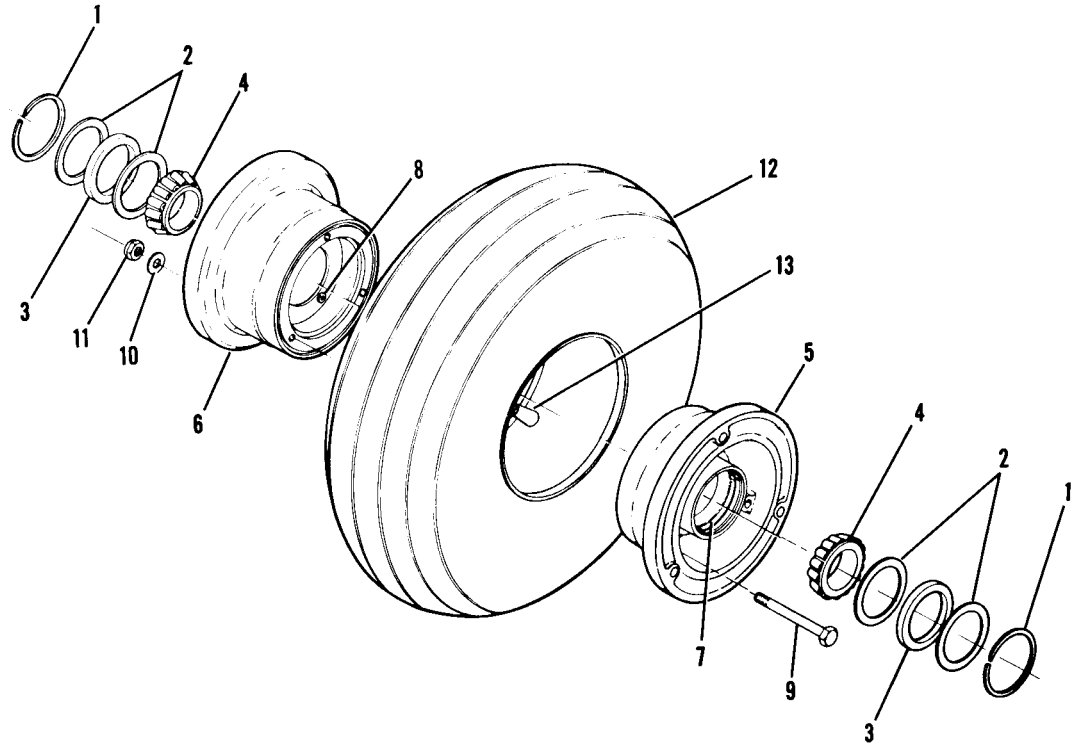

Figure 37. Cleveland Nose Wheel Assembly

FIGURE AND INDEX NO.	PART NUMBER	DESCRIPTION 1 2 3 4 5 6 7	UNITS PER ASSY	USABLE ON CODE
37 -		WHEEL ASSEMBLY-NOSE GEAR CLEVELAND	NP	
	1241156-12	WHEEL ASSEMBLY CFP 40-77	1	
- 1	155-2	RING CFP	2	
- 2	153-8	RING-GREASE SEAL CFP	4	
- 3	154-6	GREASE SEAL-FELT CFP	2	
- 4	08125	BEARING CFP	2	
- 5	161-31	WHEEL HALF-MALE CFP	1	
- 6	162-28	WHEEL HALF-FEMALE CFP	1	
- 7	08231	CUP-BEARING CFP	1	
- 8	217-1	GROMMET CFP FEMALE HALF ONLY	1	
- 9	AN4-22A	BOLT	3	
-10	AN960-416	WASHER	3	
-11	MS21042L4	NUT	3	
-12	C262003-0202	TIRE 5.00 X 5 6 PLY RATED	1	
	C262001-0202	TIRE 5.00X5 6 PLY RATED WHITEWALL	1	
-13	C262023-0101	TUBE 5.00 X 5	1	

Alighting Gear (Cont)

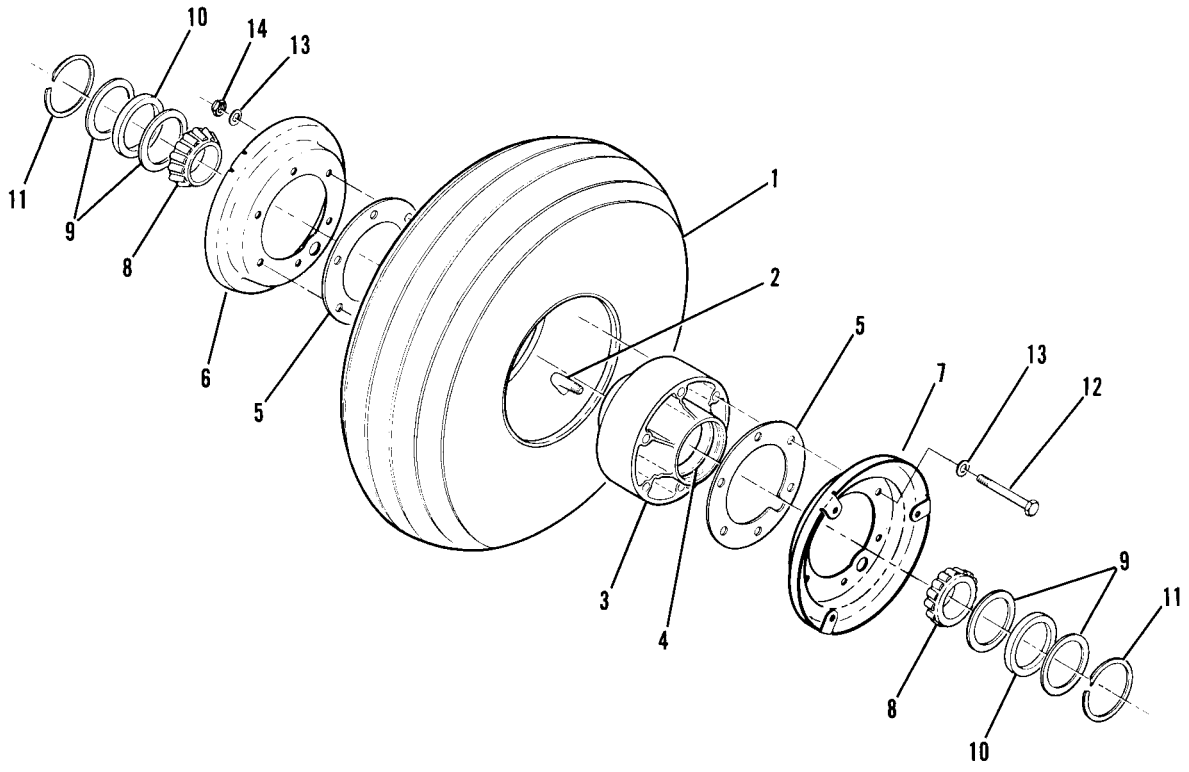

Figure 38. Nose Gear Wheel Assembly - Alternate

FIGURE AND INDEX NO.	PART NUMBER	DESCRIPTION 1 2 3 4 5 6 7	UNITS PER ASSY	USABLE ON CODE
38 -		WHEEL ASSY-NOSE GEAR ALTERNATE	NP	
- 1	C262003-0202	TIRE-BLACKWALL 5.00X5 6 PLY RATED	1	
	C262001-0202	TIRE-WHITEWALL 5.00X5 6 PLY RATED	1	
- 2	C262023-0101	TUBE-5.00X5	1	
	C163003-0401	WHEEL ASSY MCL	1	
- 3	C30057	HUB ASSY MCL	1	
- 4	A30078-1	CUP-BEARING MCL	2	
- 5	B30077	SPACER MCL	2	
- 6	C30172-1	FLANGE-WHEEL RH MCL	1	
- 7	C30172	FLANGE-WHEEL LH MCL	1	
- 8	A30078-2	CONE-BEARING MCL	2	
- 9	A30048	RETAINER-GREASE SEAL	4	
-10	A30047	GREASE SEAL-FELT MCL	2	
-11	A1636-23	RING-RETAINER MCL	2	
-12	A2513-34	BOLT MCL	6	
-13	A1638-15	WASHER MCL	12	
-14	A1639-26	NUT MCL	6	

Alighting Gear (Cont)

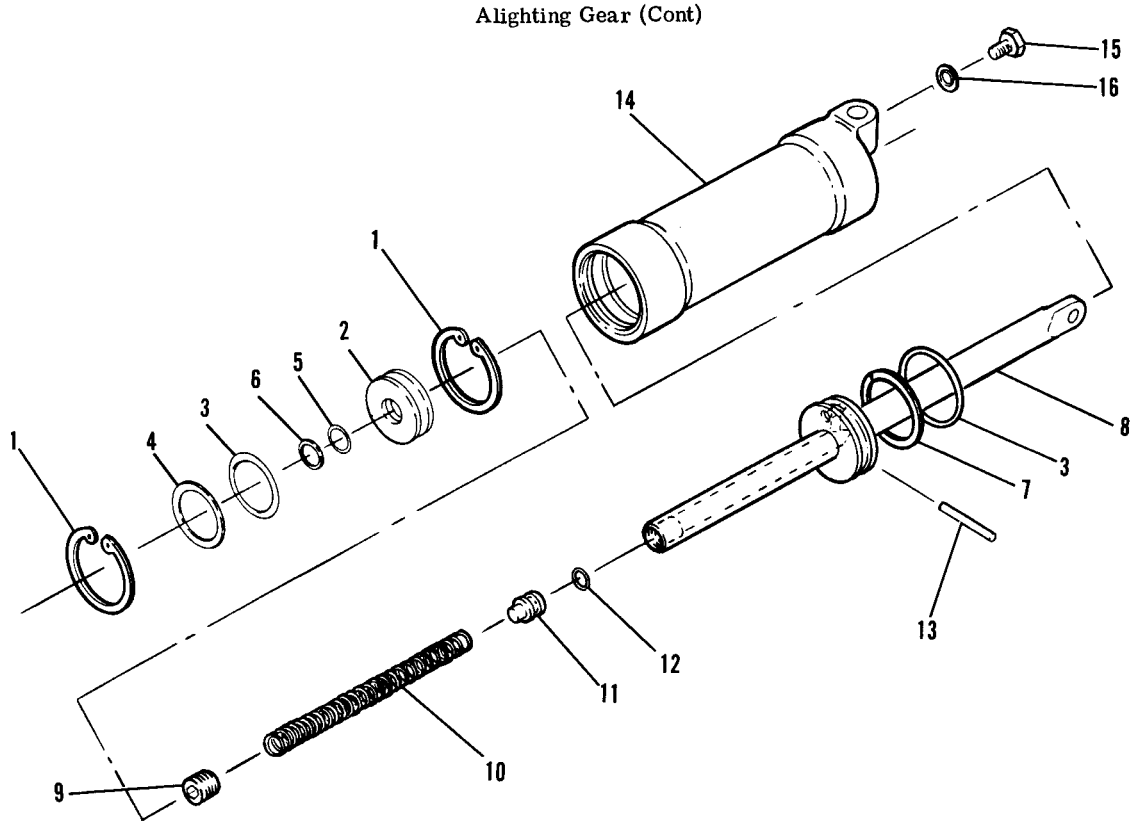

Figure 39. Shimmy Dampener Assembly

FIGURE AND INDEX NO.	PART NUMBER	DESCRIPTION 1 2 3 4 5 6 7	UNITS PER ASSY	USABLE ON CODE
39 -	0743624-1	SHIMMY DAMPENER ASSY	1	
- 1	MS16625-143	LOCK RING	2	
- 2	1442113-9	HEAD	1	
- 3	MS28775-027	PACKING RING	1	
- 4	S1628-027	BACKUP RING	1	
- 5	MS28775-112	PACKING RING	1	
- 6	S1628-112	BACKUP RING	1	
- 7	MS28782-22	RETAINER	1	
- 8	0743623-1	ROD ASSY-SHIMMY DAMPENER	1	
- 9	0743623-6	SET SCREW	1	
-10	0743623-3	SPRING	1	
-11	0743623-4	PISTON-FLOATING	1	
-12	AN6227B3	O RING	1	
-13	NAS561P4-18	ROLL PIN	1	
-14	0743622-1	BARREL ASSY-SHIMMY DAMPENER	1	
	MS21209F4-20	HELI-COIL HELI	2	
-15	NAS563-11	BOLT	1	
-16	600-015-10-0S	STAT-O-SEAL PKSC	1	

FIGURE AND INDEX NO.	PART NUMBER	DESCRIPTION 1 2 3 4 5 6 7	UNITS PER ASSY	USABLE ON CODE
40 -		LANDING GEAR INSTALLATION-MAIN	NP	A
- 1	0741630-1	SPRING ASSEMBLY-MAIN LANDING GEAR LH	1	
	0741630-2	SPRING ASSEMBLY-MAIN LANDING GEAR RH	1	
		ATTACHING PARTS		
- 2	1241214-2	PIN	1	
- 3	MS16625-1075	RING-RETAINING	1	
		---*---		
- 4	0741629-1	SUPPORT ASSEMBLY LH-STEP	1	
	0741629-2	SUPPORT ASSEMBLY RH-STEP	1	
- 5	CM2692-12P5S	PLUG BUTTON	1	
- 6	0741632-1	BUSHING ASSEMBLY-MAIN LANDING GEAR	1	
- 7	0741633-1	SPACER-MAIN LANDING GEAR BUSHING	1	
- 8	MS16624-1262	RING-RETAINER	2	
- 9	0741623-1	STEP ASSEMBLY	1	
		ATTACHING PARTS		
-10	AN509-10R8	SCREW	1	
-11	NAS221-9	SCREW	2	
-12	AN960-10L	WASHER	2	
-13	MS20364-1032C	NUT	2	
		---*---		
-14	0741623-4	TREAD-STEP	1	
-15	1741003-3	FITTING-MAIN GEAR AXLE LH	1	
	1741003-4	FITTING-MAIN GEAR AXLE RH	1	
		ATTACHING PARTS		
-16	NAS464P5LA30	BOLT	2	
-17	AN960-516L	WASHER	2	
-18	MS21042L5	NUT	2	
		---*---		
-19	0541124-1	AXLE-MAIN LANDING GEAR	1	
		ATTACHING PARTS		
-20	AN5-17A	BOLT	2	
	AN5-21A	BOLT USED WITH WHEEL FAIRINGS	2	
-21	AN960-516L	WASHER	2	
-22	MS21042L5	NUT	2	
-23	AN6-17A	BOLT	2	
	AN6-21A	BOLT USED WITH WHEEL FAIRINGS	2	
-24	AN960-616L	WASHER	2	
-25	MS21042L6	NUT	2	
		---*---		
-26	0441139-5	SHIM	AR	
	0441139-6	SHIM	AR	
	0541157-1	SHIM	AR	
	0541157-2	SHIM	AR	
	0541157-3	SHIM	AR	
	1241061-1	SHIM	AR	
-27	SEE FIG 40A	WHEEL & BRAKE ASSEMBLY-MAIN GEAR	1	
		ATTACHING PARTS		
-28	S1117-24	NUT	1	
-29	MS24665-351	COTTER PIN	1	
		---*---		
-30	0741048-8	CAP-HUB	2	
		ATTACHING PARTS		
-31	AN515-8R4	SCREW	3	
-32	AN936A8	WASHER	3	
		---*---		
-33	0700099-93	LINE ASSEMBLY-BRAKE LH	1	
	0700099-92	LINE ASSEMBLY-BRAKE RH	1	
		ATTACHING PARTS		
-34	AN833-3D	ELBOW	1	
	AN960PD616	WASHER	2	
	AN924-3D	NUT	1	
-35	MS20822-3D	ELBOW	1	
-36	0550100-6	BRACKET	1	
-37	MS21919DG3	CLAMP	1	
	AN520-10R6	SCREW	1	
	MS21044N3	NUT	1	
-38	S1495-3	HOSE 1.30 IN LG BULK ITEM REF S1495-3-1.30	1	
-39	S1693-6	STA-STRAP	1	
		---*---		

CONTINUED ON NEXT PAGE

Alighting Gear (Cont)

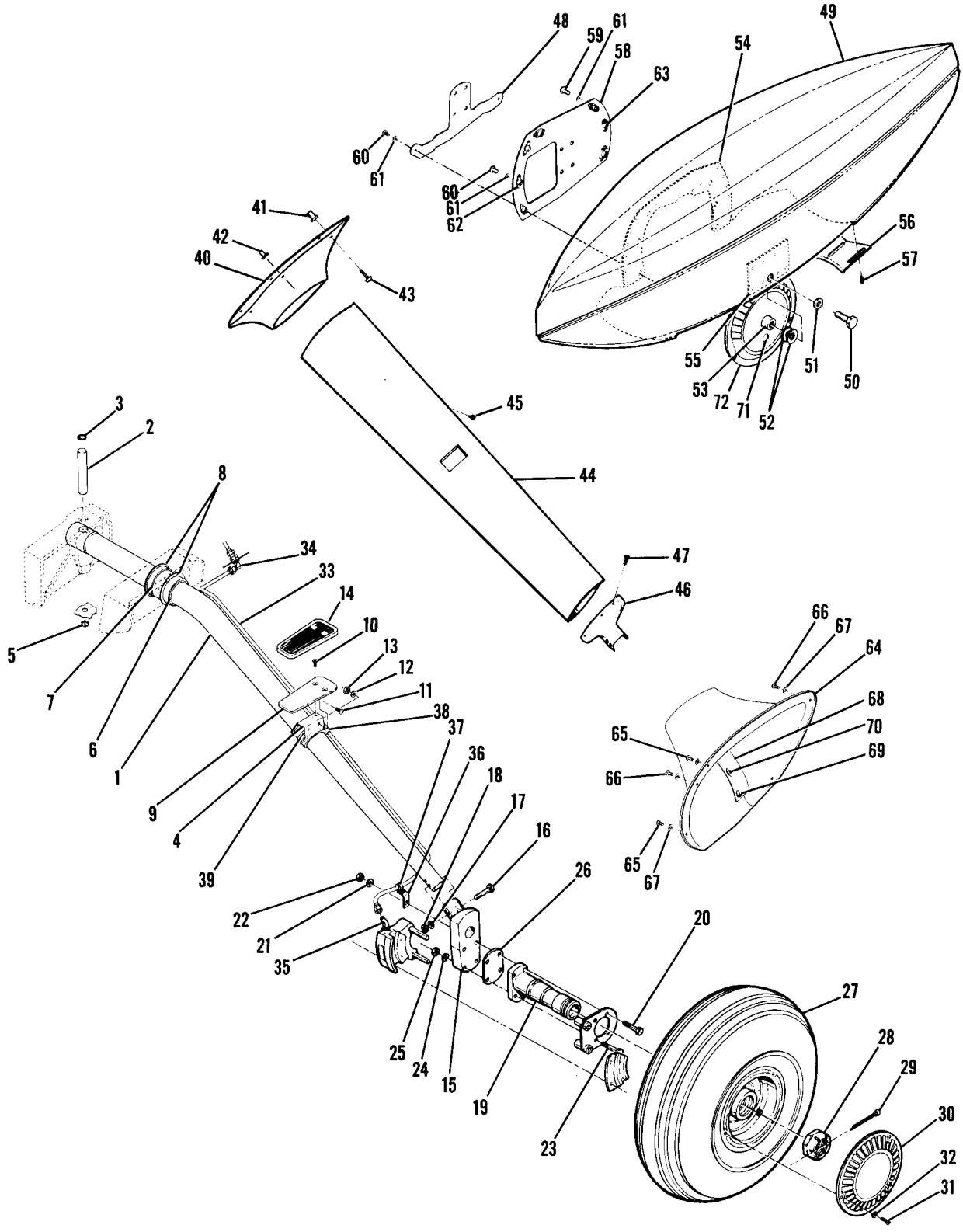

182 SERIAL 18262466 THRU 18263475

Figure 40. Main Landing Gear Installation

FIGURE AND INDEX NO.	PART NUMBER	DESCRIPTION 1 2 3 4 5 6 7	UNITS PER ASSY	USABLE ON CODE
40 -40	1741005-201	FAIRING ASSEMBLY-LH VESTAL WHITE	1	
	1741005-251	FAIRING ASSEMBLY-LH PAINT TO MATCH A/C COLOR	1	
	1741005-200	FAIRING ASSEMBLY-RH VESTAL WHITE	1	
	1741005-252	FAIRING ASSEMBLY-RH PAINT TO MATCH A/C COLOR	1	
		ATTACHING PARTS		
-41	NAS1329S3K.080	NUT	4	
-42	NAS1329S3K.130	NUT	2	
-43	AN520-10R12	SCREW	6	
		---*---		
	1741005-21	SPLICE PLATE ASSY-LH	1	
	1741005-22	SPLICE PLATE ASSY-RH	1	
	NAS680A06K	NUTPLATE	3	
-44	0741624-17	FAIRING ASSY-LH USED WITH WHEEL FAIRINGS	1	
	0741624-18	FAIRING ASSY-RH USED WITH WHEEL FAIRINGS	1	
	0741624-1	FAIRING ASSY-LH USED WITHOUT WHEEL FAIRINGS	1	
	0741624-2	FAIRING ASSY-RH USED WITHOUT WHEEL FAIRINGS	1	
-45	S1021Z8-6	SCREW	9	
	NAS395-16-3	NUTPLATE	9	
	NAS697A08K	NUTPLATE	3	
-46	0741622-1	COVER PLATE-LH USED WITH WHEEL FAIRINGS	1	
	0741622-2	COVER PLATE-RH USED WITH WHEEL FAIRINGS	1	
	0741622-3	COVER PLATE-LH USED WITHOUT WHEEL FAIRINGS	1	
	0741622-4	COVER PLATE-RH USED WITHOUT WHEEL FAIRINGS	1	
		ATTACHING PARTS		
-47	AN525-832R6	SCREW	3	
	NAS446-4-3	NUT	3	
		---*---		
		FAIRING INSTALLATION-MAIN LANDING GEAR	NP	
-48	1741022-1	STIFFENER-LH WHEEL FAIRING	1	
	1741022-2	STIFFENER-RH WHEEL FAIRING	1	
-49	0541203-15	FAIRING ASSY-WHEEL MAIN LANDING GEAR LH	1	
	0541203-14	FAIRING ASSY-WHEEL MAIN LANDING GEAR RH	1	
		ATTACHING PARTS		
-50	AN6-6A	BOLT	1	
-51	AN960-616L	WASHER	1	
-52	AN960-616	WASHER	2	
-53	0741047-2	NUT	1	
	MS24665-362	PIN-COTTER	1	
		---*---		
-54	0541206-1	DOUBLER-WHEEL FAIRING	1	
-55	0541207-1	DOUBLER-WHEEL FAIRING	1	
	NAS680A3	NUTPLATE	3	
-56	0541205-1	SCRAPER-WHEEL FAIRING	1	
		ATTACHING PARTS		
-57	AN520-10R16	SCREW	3	
	AN960-10	WASHER	6	
	MS21044N3	NUT	3	
		---*---		
-58	0741046-7	PLATE ASSEMBLY-MOUNTING LH	1	
	0741046-8	PLATE ASSEMBLY-MOUNTING RH	1	
		ATTACHING PARTS		
-59	AN525-10R12	SCREW	2	
-60	AN525-10R10	SCREW	2	
-61	S1450-3D9-032	WASHER	4	
		---*---		
-62	NAS686A3	NUTPLATE	4	
-63	NAS680A3K	NUTPLATE	3	
-64	0741634-17	FAIRING ASSEMBLY LH-BRAKE	1	
	0741634-18	FAIRING ASSEMBLY RH-BRAKE	1	
		ATTACHING PARTS		
-65	AN525-10R16	SCREW	3	
-66	AN525-10R14	SCREW	3	
-67	AN960PD10	WASHER	5	
		---*---		
-68	0741634-5	STIFFENER ASSEMBLY	1	
-69	S1862-1	NUTPLATE	2	
-70	S1863-2	NUTPLATE	2	
-71	6241M	VALVE-EXTENSION DL	1	
-72	0741048-7	CAP-WHEEL	2	
	AN515-8R4	SCREW	3	
	AN936A8	WASHER	3	
		A---182 SERIAL 18262466 THRU 18263475		

Alighting Gear (Cont)

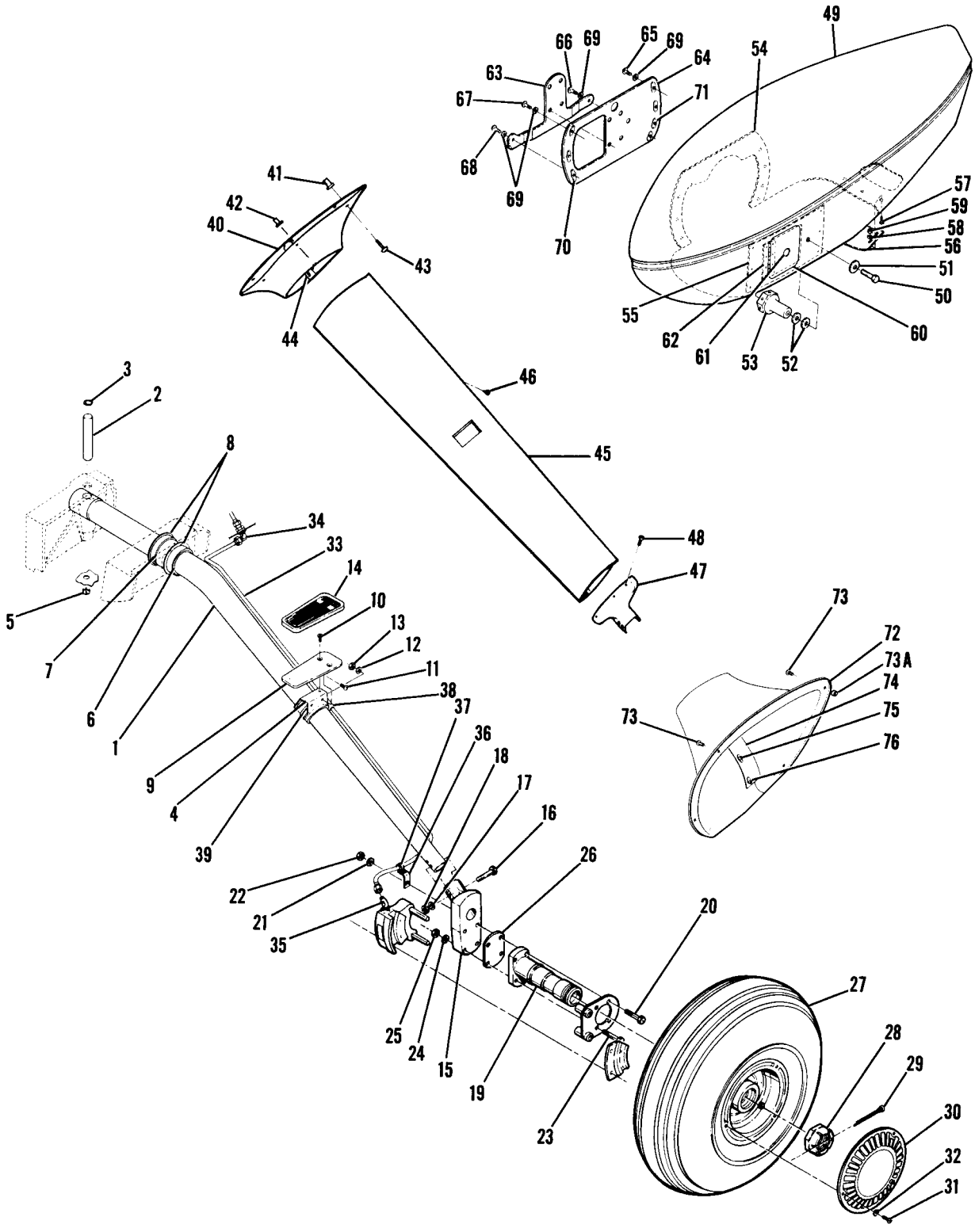

182 SERIAL 18263476 & ON

Figure 40A. Main Landing Gear Installation

FIGURE AND INDEX NO.	PART NUMBER	DESCRIPTION 1 2 3 4 5 6 7	UNITS PER ASSY	USABLE ON CODE
40A-		MAIN LANDING GEAR INSTALLATION	NP	A
	0741630-2	SPRING ASSY-MAIN LANDING GEAR RH	1	
		ATTACHING PARTS		
- 1	0741630-1	SPRING ASSY-MAIN LANDING GEAR LH	1	
- 2	1241214-2	PIN	1	
- 3	MS16625-1075	RING-RETAINING	1	
		---*---		
- 4	0741629-1	SUPPORT ASSY LH-STEP	1	
	0741629-2	SUPPORT ASSY RH-STEP	1	
- 5	CM2692-12P5S	PLUG BUTTON	1	
- 6	0741632-1	BUSHING ASSY-MAIN LANDING GEAR	1	
- 7	0741633-1	SPACER-MAIN LANDING GEAR BUSHING	1	
- 8	MS16624-1262	RING-RETAINER	2	
- 9	0741623-1	STEP ASSY	1	
		ATTACHING PARTS		
-10	AN509-10R8	SCREW	1	
-11	NAS221-9	SCREW	2	
-12	AN960-10L	WASHER	2	
-13	MS20364-1032C	NUT	2	
		---*---		
-14	0741623-4	TREAD-STEP	1	
-15	1714003-3	FITTING-MAIN LANDING GEAR AXLE LH	1	
	1714003-4	FITTING-MAIN LANDING GEAR AXLE RH	1	
		ATTACHING PARTS		
-16	NAS464P5LA30	BOLT	2	
-17	AN960-516L	WASHER	2	
-18	NAS679A5	NUT	2	
		---*---		
-19	0541124-1	AXLE-MAIN LANDING GEAR	1	
		ATTACHING PARTS		
-20	AN5-17A	BOLT	2	
	AN5-21A	BOLT USED WITH WHEEL FAIRINGS	2	
-21	AN960-516L	WASHER	2	
-22	MS21042L5	NUT	2	
-23	AN617A	BOLT	2	
	AN6-21A	BOLT USED WITH WHEEL FAIRINGS	2	
-24	AN960-616L	WASHER	2	
-25	MS21042L6	NUT	2	
		---*---		
-26	0441139-5	SHIM	AR	
	0441139-6	SHIM	AR	
	0541157-1	SHIM	AR	
	0541157-2	SHIM	AR	
	0541157-3	SHIM	AR	
	1241061-1	SHIM	AR	
-27	SEE FIG 41 & 42	WHEEL & BRAKE ASSY-MAIN GEAR	1	
		ATTACHING PARTS		
-28	S1117-24	NUT	1	
-29	MS24665-351	COTTER PIN	1	
		---*---		
-30	0741048-8	HUB CAP	2	
		ATTACHING PARTS		
-31	AN515-8R4	SCREW	3	
-32	AN936A8	WASHER	3	
		---*---		
-33	0700099-93	LINE ASSY-BRAKE LH	1	
	0700099-92	LINE ASSY-BRAKE RH	1	
		ATTACHING PARTS		
-34	AN833-3D	ELBOW	1	
	AN960PD616	WASHER	2	
	AN924-3D	NUT	1	
-35	MS20822-3D	ELBOW	1	
-36	0550100-6	BRACKET	1	
-37	MS21919DG3	CLAMP	1	
	AN520-10R6	SCREW	1	
	MS21044N3	NUT	1	
-38	S1495-3	HOSE	1	
-39	S1693-6	STA-STRAP	1	
		---*---		

CONTINUED ON NEXT PAGE

FIGURE AND INDEX NO.	PART NUMBER	DESCRIPTION 1 2 3 4 5 6 7	UNITS PER ASSY	USABLE ON CODE
40A-40	1741005-201	FAIRING ASSY-LH VESTAL WHITE	1	B
	1741005-251	FAIRING ASSY-LH PAINT TO MATCH A/C COLOR	1	B
	1741005-200	FAIRING ASSY-RH VESTAL WHITE	1	B
	1741005-252	FAIRING ASSY-RH PAINT TO MATCH A/C COLOR	1	B
	0741052-201	FAIRING ASSY-LH	1	C
	0741052-200	FAIRING ASSY-RH	1	C
		ATTACHING PARTS		
-41	NAS1329S3K.080	NUT	4	
-42	NAS1329S3K.130	NUT	2	B
	NAS1329S3K.130	NUT	1	C
-43	AN520-10P12	SCREW	6	
		---*---		
-44	1741005-21	SPLICE PLATE ASSY-LH	1	B
	1741005-22	SPLICE PLATE ASSY-RH	1	B
	NAS680A06K	NUTPLATE	3	B
	AN515-6R6	SCREW	3	B
-45	0741639-5	FAIRING ASSY-LH WITH WHEEL FAIRINGS	1	
	0741639-6	FAIRING ASSY-RH WITH WHEEL FAIRINGS	1	
	0741624-1	FAIRING ASSY-LH WITHOUT WHEEL FAIRINGS	1	B
	0741624-2	FAIRING ASSY-RH WITHOUT WHEEL FAIRINGS	1	B
-46	S1021Z8-6	SCREW WITH WHEEL FAIRINGS	10	
	NAS395-16-3	NUTPLATE WITH WHEEL FAIRINGS	10	
	S1021Z8-6	SCREW WITHOUT WHEEL FAIRINGS	9	
	NAS395-16-3	NUTPLATE WITHOUT WHEEL FAIRINGS	9	B
-47	0741640-1	COVER PLATE ASSY-LH WITH WHEEL FAIRINGS	1	
	0741640-2	COVER PLATE ASSY-RH WITH WHEEL FAIRINGS	1	
	0741622-1	COVER PLATE-LH WITHOUT WHEEL FAIRINGS	1	B
	0741622-2	COVER PLATE-RH WITHOUT WHEEL FAIRINGS	1	B
		ATTACHING PARTS		
-48	AN525-832R6	SCREW	3	
		---*---		
	NAS697A08K	NUTPLATE	3	
		FAIRING INSTALLATION-MAIN LANDING GEAR	NP	
-49	0541223-23	FAIRING ASSY LH-WHEEL	1	
	0541223-22	FAIRING ASSY RH-WHEEL	1	
		ATTACHING PARTS		
-50	AN6-6A	BOLT	1	
-51	AN960-616L	WASHER	1	
-52	AN960-616	WASHER	AR	
-53	0741047-2	NUT	1	
	MS24665-362	COTTER PIN	1	
		---*---		
-54	0741050-1	DOUBLER LH-WHEEL FAIRING	1	
	0741050-2	DOUBLER RH-WHEEL FAIRING	1	
	NAS680A08	NUTPLATE	6	
-55	0541222-1	DOUBLER	1	
-56	0541221-1	SCRAPER-WHEEL FAIRING	1	
		ATTACHING PARTS		
-57	AN520-10R12	SCREW	3	
-58	AN960-10	WASHER	6	
-59	MS21044N3	NUT	3	
		---*---		
-60	0541223-13	DOOR ASSY-ACCESS	1	
-61	KM610-64	LATCH	1	
-62	0541223-15	HINGE ASSY	1	
	0541223-11	HINGE HALF ATTACH TO FAIRING	1	
	0541223-12	HINGE HALF ATTACH TO DOOR ASSY	1	
	MS20253P2-292	PIN-HINGE	1	
-63	0741051-5	STIFFENER LH-WHEEL FAIRING	1	
	0741051-6	STIFFENER RH-WHEEL FAIRING	1	
-64	0741049-5	PLATE ASSY-LH-MOUNTING	1	
	0741049-6	PLATE ASSY-RH-MOUNTING	1	
		ATTACHING PARTS		
-65	AN525-10R9	SCREW	3	
-66	AN525-10R10	SCREW	1	
-67	AN525-10R6	SCREW	2	
-68	AN525-10R7	SCREW	1	
-69	S1450-3D9-032	WASHER	7	
		---*---		
-70	NAS680A3K	NUTPLATE	3	
-71	NAS686A3	NUTPLATE	4	

CONTINUED ON NEXT PAGE

FIGURE AND INDEX NO.	PART NUMBER	DESCRIPTION 1 2 3 4 5 6 7	UNITS PER ASSY	USABLE ON CODE
40A-72	0741641-1	FAIRING ASSY LH-BRAKE	1	
	0741641-2	FAIRING ASSY RH-BRAKE	1	
		ATTACHING PARTS		
-73	AN525-832R12	SCREW	6	
		---*---		
-73A	0741641-7	SPACER	6	
-74	0741641-5	STIFFENER ASSEMBLY	1	
		ATTACHING PARTS		
	S1021Z6-6	SCREW	4	
		---*---		
-75	S1863-2	NUTPLATE	2	
-76	S1863-1	NUTPLATE	2	
	6241M	EXTENSION VALVE DL	1	
		A---182 SERIAL 18263476 & ON		
		B---182 SERIAL 18263476 THRU 18264295		
		C---182 SERIAL 18264296 & ON		

Alighting Gear (Cont)

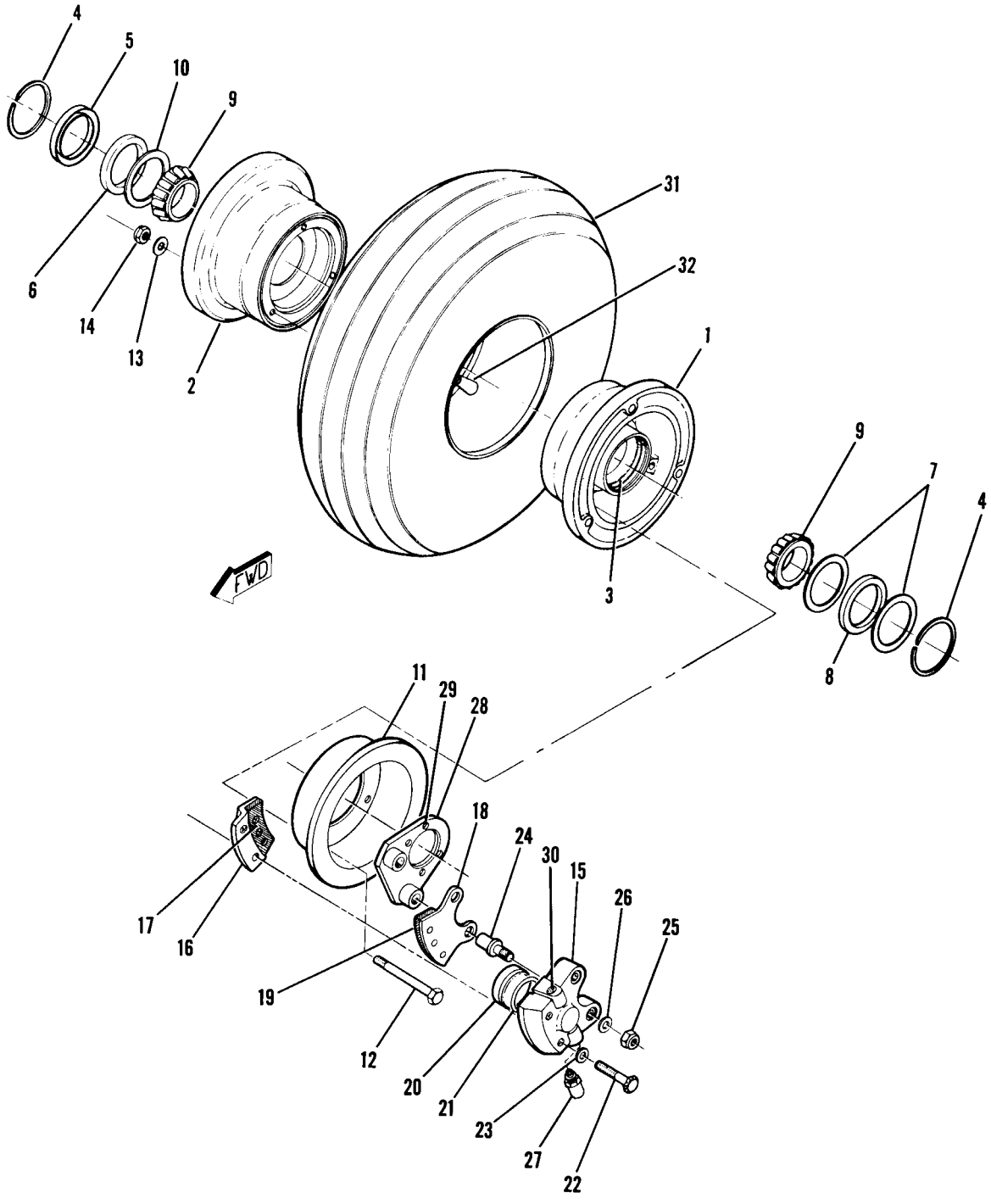

Figure 41. Main Wheel & Brake Assembly

FIGURE AND INDEX NO.	PART NUMBER	DESCRIPTION 1 2 3 4 5 6 7	UNITS PER ASSY	USABLE ON CODE
41 -		WHEEL & BRAKE ASSEMBLY-MAIN LANDING GEAR	NP	
	C163001-0104	WHEEL ASSEMBLY-MAIN GEAR CFP 40-113	1	
- 1	161-49	WHEEL HALF ASSEMBLY-MALE CFP	1	
- 2	162-47	WHEEL HALF ASSEMBLY-FEMALE CFP	1	
- 3	13836	CUP-BEARING	1	
- 4	3023	SNAP RING CFP	1	
- 5	153-15	RING-GREASE SEAL CFP	1	
- 6	154-13	FELT-GREASE SEAL CFP	1	
- 7	3022	RING-GREASE SEAL CFP	2	
- 8	3021	FELT-GREASE SEAL CFP	1	
- 9	13889	CONE-BEARING CFP	2	
-10	A39070	RING-GREASE SEAL CFP	1	
-11	164-40	DISC ASSEMBLY-BRAKE CFP	1	
-12	AN4-36A	BOLT	3	
-13	AN960-416	WASHER	3	
-14	AN365-428	NUT	3	
	C163030-0113 **	BRAKE ASSEMBLY	1	
	91-44	CYLINDER ASSEMBLY CFP	1	
-15	61-37	CYLINDER CFP	1	
-16	74-10	BACK PLATE ASSEMBLY CFP	1	
-17	66-30	LINING	1	
	561	RIVET CFP	AR	
-18	73-11	PRESSURE PLATE ASSEMBLY CFP	1	
-19	66-30	LINING CFP	1	
	561	RIVET CFP	AR	
-20	92-17	PISTON ASSEMBLY CFP	1	
-21	AN6230B2	O RING	1	
-22	LP4-17AM	BOLT CFP	2	
-23	AN960-416L	WASHER	2	
-24	69-4	BOLT-ANCHOR CFP	2	
-25	MS21042L4	NUT	2	
-26	AN960-416L	WASHER	2	
-27	FC6446	SCREW-BLEEDER CFP	1	
	183-1	CAP-BLEEDER SCREW CFP	1	
	37-206	SEAT-BLEEDER SCREW CFP	1	
-28	75-37	TORQUE PLATE ASSEMBLY CFP	1	
-29	145-10	BUSHING-TORQUE PLATE	2	
-30	AN914-1D	ELBOW USED WITH C163030-0107 & -0113 ASSY	1	
-31	C262003-0204	TIRE 6.00X6	1	
-32	C262023-0102	TUBE 6.00X6	1	

NOTE. **BRAKE ASSEMBLIES DESCRIBED ARE NORMALLY LH - REVERSE FITTINGS & TORQUE PLATE BUSHINGS FOR RH INSTALLATION.

Landing Gear (Cont)

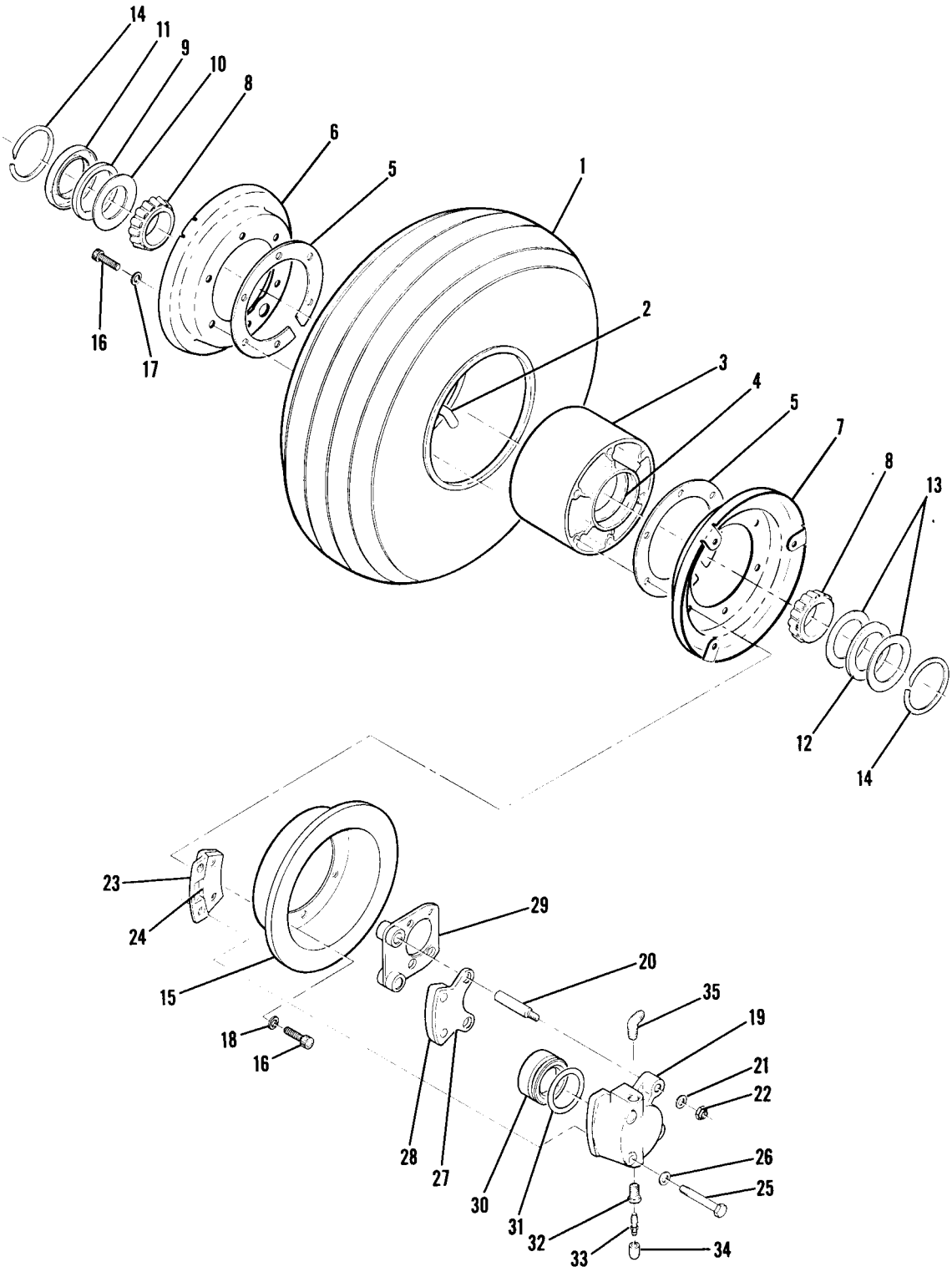

Figure 42. Main Landing Gear Wheel & Brake Assembly (Alternate)

FIGURE AND INDEX NO.	PART NUMBER	DESCRIPTION 1 2 3 4 5 6 7	UNITS PER ASSY	USABLE ON CODE
42 -		WHEEL & BRAKE ASSY-MAIN LANDING GEAR ALT	NP	
- 1	C262003-0204	TIRE 6.00X6	1	
- 2	C262023-0102	TUBE 6.00X6	1	
	C163003-0102 **	WHEEL ASSY-MAIN GEAR MCL	1	
- 3	D30259	HUB ASSY MCL	1	
- 4	A30079-1	CUP BEARING MCL	2	
- 5	B30076	SPACER MCL	2	
- 6	C30163-6	FLANGE-WHEEL MCL	1	
- 7	C30163-4	FLANGE-WHEEL MCL	1	
- 8	A30079-2	CONE-BEARING MCL	2	
- 9	A30010	GREASE SEAL-FELT MCL	1	
-10	A30015	RETAINER-GREASE SEAL MCL	1	
-11	A30014	RETAINER-GREASE SEAL MCL	1	
-12	A30011	GREASE SEAL-FELT MCL	1	
-13	A30013	RETAINER-GREASE SEAL MCL	2	
-14	A1636-24	RING-REATINER MCL	2	
-15	B30195	DISC ASSY MCL	1	
-16	A1635-73	BOLT MCL	12	
-17	A1638-30	WASHER MCL	6	
-18	A1638-1	WASHER MCL	6	
	C163032-0109 %*	BRAKE ASSY	1	
	C30019	CYLINDER ASSY MCL	1	
-19	C30041	CYLINDER MCL	1	
-20	A30023	PIN-GUIDE MCL	2	
-21	AN960-416L	WASHER	2	
-22	MS20364-428A	NUT	2	
-23	B30027	BACK PLATE ASSY MCL	1	
-24	B30026	LINING-BRAKE MCL	1	
	A30087	RIVET MCL	2	
-25	AN4H21A	BOLT	2	
-26	AN960-416L	WASHER	2	
-27	B30024	PRESSURE PLATE ASSY MCL	1	
-28	B30026	LINING-BRAKE MCL	1	
	A30087	RIVET MCL	2	
-29	B30594	TORQUE PLATE ASSY MCL	1	
-30	A30021	PISTON ASSY MCL	1	
-31	AN6230B2	O-RING	1	
-32	A30030	FITTING-BLEEDER MCL	1	
-33	A30085	FITTING-BLEEDER MCL	1	
-34	A30040	CAP-DUST MCL	1	
-35	MS20822-3D	ELBOW	1	
	R561	RIVET SET KIT	1	

NOTE. *BRAKE ASSEMBLIES DESCRIBED ARE NORMALLY LH-REVERSE FITTINGS & TORQUE PLATE ASSY FOR RH INSTALLATIONS.

NOTE. %THIS BRAKE ASSY MUST BE USED WITH C163003-0102 WHEEL ASSEMBLIES ONLY.

NOTE. **THIS WHEEL ASSEMBLY MUST BE USED ONLY ON AIRCRAFT ORIGINALLY EQUIPPED WITH C163003-0102 MAIN GEAR WHEELS.

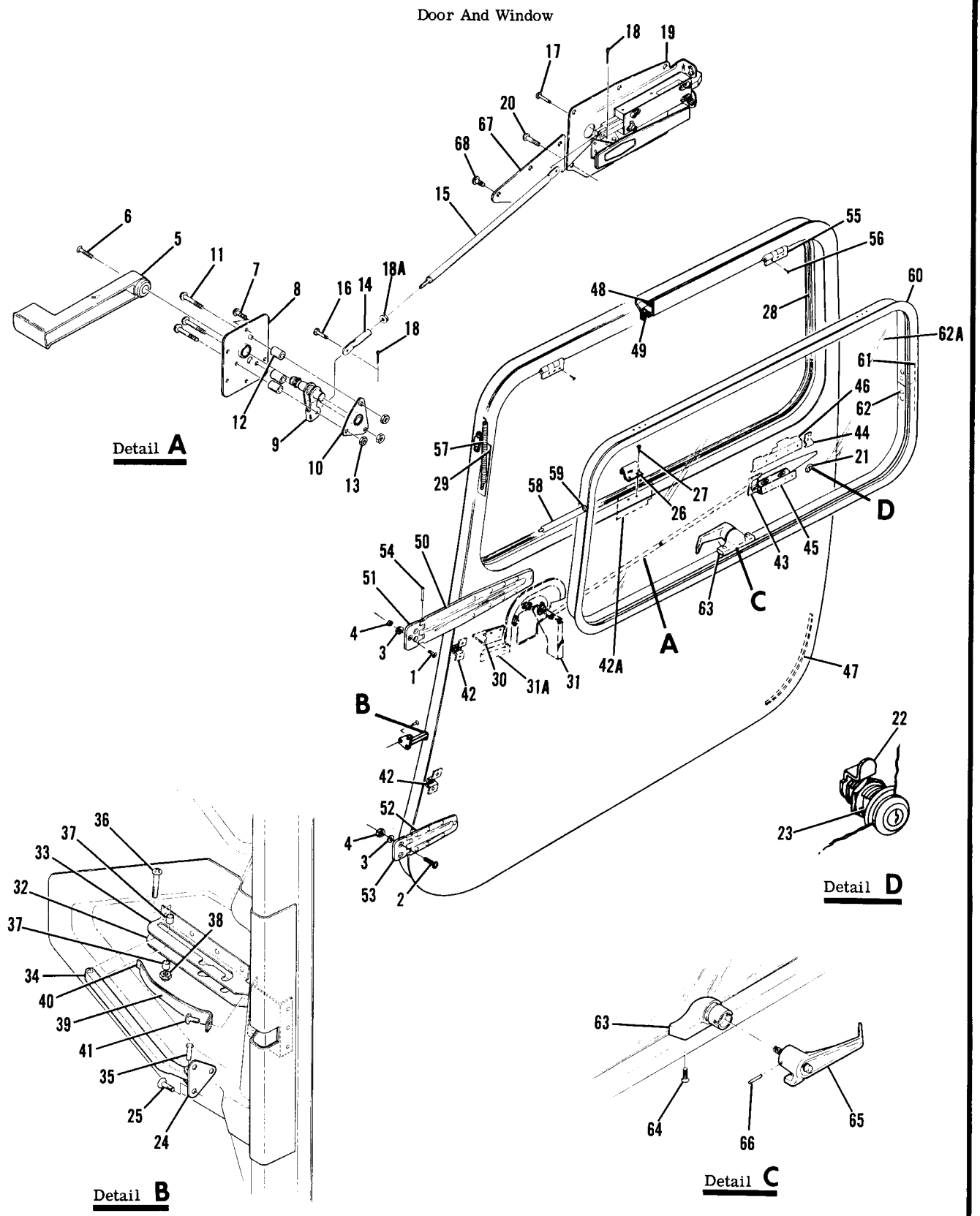

Figure 43. Left Cabin Door Assembly

FIGURE AND INDEX NO.	PART NUMBER	DESCRIPTION 1 2 3 4 5 6 7	UNITS PER ASSY	USABLE ON CODE
43 -	1217045-203	CABIN DOOR ASSEMBLY-LH	1	A
		ATTACHING PARTS		
- 1	AN509-10R14	SCREW	3	
- 2	AN507-1032R12	SCREW	2	
- 3	AN960-10L	WASHER	5	
- 4	NAS679A3	NUT	5	
		---*---		
- 5	1217053-2	HANDLE-INSIDE DOOR	1	
		ATTACHING PARTS		
- 6	NAS388-10-7P	SCREW-SELF LOCKING	1	
		---*---		
	1217046-3	BASE PLATE ASSEMBLY	1	
		ATTACHING PARTS		
- 7	NAS220-5	SCREW	5	
	NAS697A08	NUTPLATE	5	
		---*---		
- 8	1217046-5	PLATE ASSEMBLY	1	
- 9	1217050-3	SHAFT ASSEMBLY	1	
-10	1217046-6	BEARING ASSEMBLY	1	
		ATTACHING PARTS		
-11	NAS221-15	SCREW	3	
-12	NAS43HT3-45	SPACER	3	
-13	MS20364-1032C	NUT	3	
		---*---		
	0517021-1	PUSH ROD ASSEMBLY	1	
-14	0517021-4	TUBE ASSEMBLY	1	
-15	0517021-5	TUBE ASSEMBLY	1	
		ATTACHING PARTS		
-16	MS20392-1C9	PIN	1	
-17	MS20392-1C15	PIN	1	
-18	MS24665-132	COTTER PIN	2	
		---*---		
-18A	AN315-4R	NUT-JAM	1	
-19	SEE FIG 45	LATCH ASSEMBLY-REMOVABLE	1	
		ATTACHING PARTS		
-20	NAS220-5	SCREW	10	
	NAS697A08	NUTPLATE	5	
		---*---		
-21	C253001-0101	LOCK ASSEMBLY-DOOR	1	
-22	0411851	WASHER	1	
-23	0711033-1	CAM-DOOR LOCK	1	
-24	1213942-1	HINGE ASSEMBLY-DOOR STOP	1	
		ATTACHING PARTS		
-25	AN509-10R8	SCREW	3	
		---*---		
-26	0700685-3	STRIKER	1	
		ATTACHING PARTS		
-27	AN507-832R6	SCREW	2	
		---*---		
		STRUCTURE ASSEMBLY-CABIN DOOR LH	NP	
-28	1217056-1	RETAINER ASSEMBLY	1	
-29	0711021-1	PLATE	1	
-30	0717012-5	SUPPORT ASSEMBLY-ARMREST	1	
	NAS697A08	NUTPLATE	1	
-31	0717012-3	SUPPORT ASSEMBLY-ARMREST	1	
-31A	0715056-1	SPACER-ARMREST	1	
-32	1217038-1	BRACKET-CABIN DOOR STOP	1	
-33	1217038-2	BRACKET-CABIN DOOR STOP	1	
-34	1411206-7	ARM-CABIN DOOR STOP	1	
		ATTACHING PARTS		
-35	MS20615-4M10	RIVET	1	
		---*---		
-36	NAS220-16	SCREW	1	
-37	1411206-1	SPACER	2	
-38	MS20364-832C	NUT	1	
-39	1411207-1	SPRING	1	
-40	1411207-2	SPRING	1	
		ATTACHING PARTS		
-41	AN525-832R7	SCREW	1	
		---*---		

CONTINUE ON NEXT PAGE

FIGURE AND INDEX NO.	PART NUMBER	DESCRIPTION 1 2 3 4 5 6 7	UNITS PER ASSY	USABLE ON CODE
43 -42	0715033-1	BRACKET-UPHOLSTERY RETAINER	2	
		ATTACHING PARTS		
	CR163-4-4	RIVET-CHERRY CY	4	
		---*---		
-42A	1217036-3	SUPPORT ASSY-DOOR PULL	1	B
	1217036-8	SUPPORT ASSY-DOOR PULL	1	C
	NAS697A3	NUTPLATE	1	
	NAS1329S3K80	RIVNUT	1	
-43	1217035-1	RUB BLOCK	1	
-44	0711034-1	STOP-CABIN DOOR HANDLE	1	
-45	0711064-5	SUPPORT ASSEMBLY-DOOR LATCH	1	
	NAS696A08	NUTPLATE	2	
-46	0717010-23	STIFFNER BRACKET ASSEMBLY-DOOR LATCH	1	
	NAS682A08	NUTPLATE	1	
-47	S1441-2	SEAL 15.00 IN LG BULK ITEM REF S1441-2-15.00	1	
-48	S1116-1	SEAL 160.00 IN LG BULK ITEM REF S1116-1-160.00	1	
-49	S2108-1	SEAL 84.00 IN LG BULK ITEM REF S2108-1-84.00	1	
-50	0711037-17	HINGE-UPPER	1	
-51	0711037-15	HINGE-STATIONARY UPPER	1	
-52	0711037-21	HINGE-LOWER	1	
-53	0711037-19	HINGE-STATIONARY LOWER	1	
-54	0711038-1	PIN-HINGE	2	
-55	0411185-11	HINGE ASSEMBLY-WINDOW	2	
		ATTACHING PARTS		
-56	CR163-4-4	RIVET-CHERRY CY	4	
		---*---		
-57	0711021-9	SPRING	1	
-58	0711021-4	ARM ASSEMBLY	1	
		ATTACHING PARTS		
-59	AN525-10R8	SCREW	1	
		---*---		
	0711050-17	WINDOW ASSEMBLY	1	
-60	0711050-18	FRAME-WINDOW	1	
-61	0711051-15	TUBE SPLICE	1	
		ATTACHING PARTS		
-62	S1727-1	RIVET	4	
	S1726-1	RIVET	2	
		---*---		
-62A	0717010-15	GLASS ASSY-WINDOW-TINTED	1	
	0711051-5	SEAL	1	
-63	1411202-201	BRACKET ASSEMBLY-WINDOW LATCH	1	
		ATTACHING PARTS		
-64	NAS514-1032-14	SCREW	2	
	NAS543-3-34	SPACER	2	
		---*---		
-65	S1483-2	HANDLE ASSEMBLY-WINDOW	1	
-66	NAS561P3-8	PIN	1	
		---*---		
-67	1217058-1	SPLICE PLATE	1	
		ATTACHING PARTS		
-68	NAS220-5	SCREW	5	
		---*---		

A---182 SERIAL 18262466 & ON
B---182 SERIAL 18262976 THRU 18263475
C---182 SERIAL 18263476 & ON

FIGURE AND INDEX NO.	PART NUMBER	DESCRIPTION 1 2 3 4 5 6 7	UNITS PER ASSY	USABLE ON CODE
44 -	1217045-202	CABIN DOOR ASSY-RH	1	A
	1217045-204	CABIN DOOR ASSY-RH	1	C
		ATTACHING PARTS		
- 1	AN509-10R14	SCREW	3	
- 2	AN507-1032R12	SCREW	2	
- 3	AN960-10L	WASHER	5	
- 4	MS21044N3	NUT	5	
		---*---		
- 5	1217053-2	HANDLE-INSIDE DOOR	1	
		ATTACHING PARTS		
- 6	NAS388-10-7P	SCREW-SELF LOCKING	1	
		---*---		
	1217046-4	BASE PLATE ASSEMBLY-RH	1	
		ATTACHING PARTS		
- 7	NAS220-5	SCREW	5	
	NAS697A08	NUTPLATE	5	
		---*---		
- 8	1217046-5	PLATE ASSEMBLY	1	
- 9	1217050-4	SHAFT ASSEMBLY	1	
-10	1217046-6	BEARING ASSEMBLY	1	
		ATTACHING PARTS		
-11	NAS221-15	SCREW	3	
-12	NAS43HT3-45	SPACER	3	
-13	MS20364-1032C	NUT	3	
		---*---		
	0517021-1	PUSH ROD ASSEMBLY	1	
-14	0517021-4	TUBE ASSEMBLY	1	
-15	0517021-5	TUBE ASSEMBLY	1	
		ATTACHING PARTS		
-16	MS20392-1C9	PIN	1	
-17	MS20392-1C15	PIN	1	
-18	MS24665-132	COTTER PIN	2	
		---*---		
-18A	AN315-4R	NUT-JAM	1	

CONTINUED ON NEXT PAGE

Door & Window (Cont)

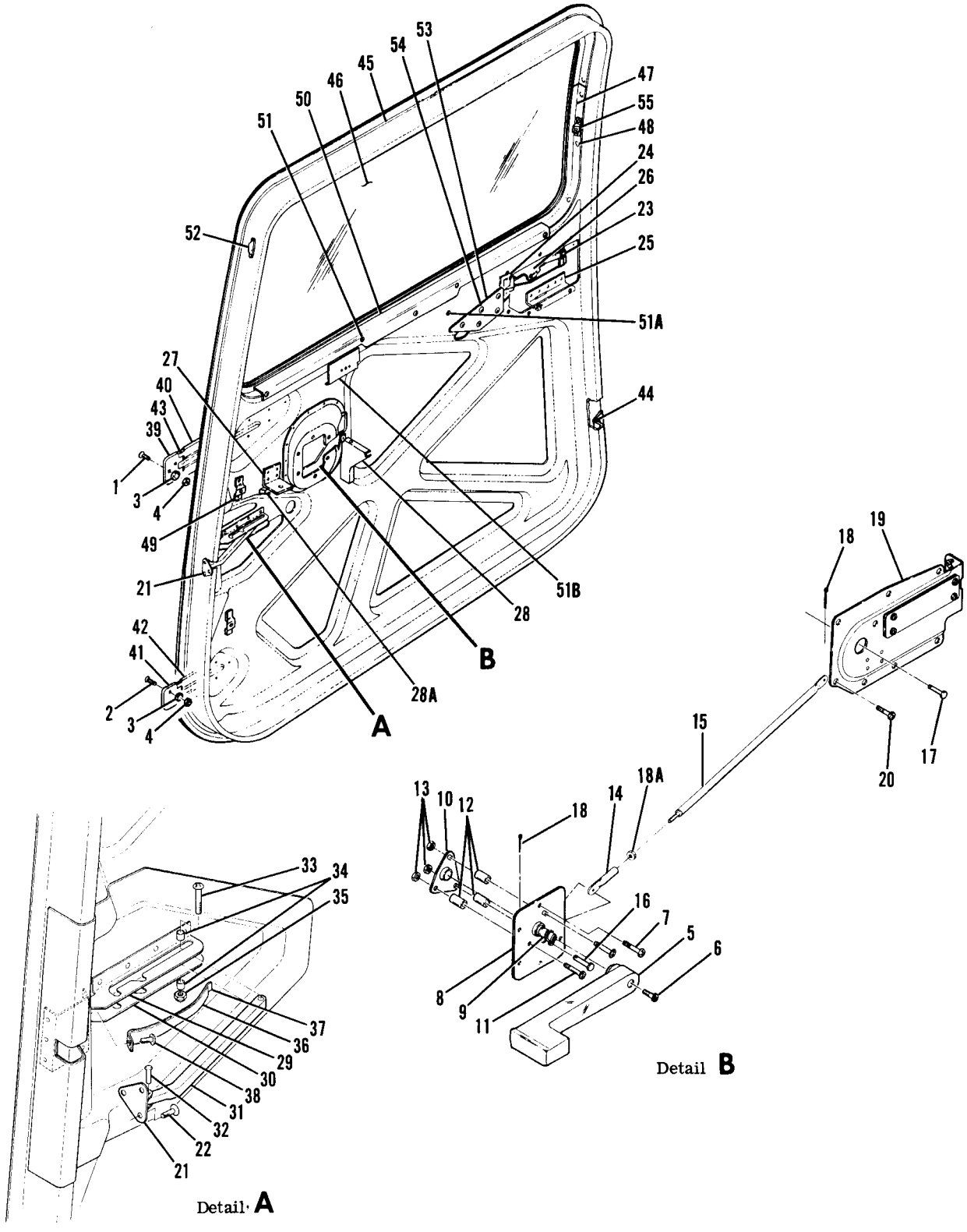

Figure 44. Right Cabin Door Assembly

FIGURE AND INDEX NO.	PART NUMBER		DESCRIPTION 1 2 3 4 5 6 7	UNITS PER ASSY	USABLE ON CODE
44 -19	SEE FIG 45		LATCH ASSEMBLY-REMOVABLE	1	
			ATTACHING PARTS		
-20	NAS220-5		SCREW	10	
	NAS697A08		NUTPLATE	5	
			---*---		
-21	1213942-2		HINGE ASSEMBLY-DOOR STOP	1	
			ATTACHING PARTS		
-22	AN509-10R8		SCREW	3	
			---*---		
			STRUCTURE ASSEMBLY-CABIN DOOR RH	NP	
-23	0711034-1		STOP-CABIN DOOR HANDLE	1	
-24	1217035-1		RUB BLOCK	1	
-25	0711064-5		SUPPORT ASSEMBLY-DOOR LATCH	1	
	NAS696A08		NUTPLATE	2	
-26	0717010-24		STIFFNER BRACKET ASSEMBLY-DOOR LATCH	1	
	NAS682A08		NUTPLATE	1	
-27	0717012-5		SUPPORT ASSEMBLY-ARMREST	1	
	NAS697A08		NUTPLATE	1	
-28	0717012-4		SUPPORT ASSEMBLY-ARMREST	1	
	NAS696A08		NUTPLATE	1	
-28A	0715056-1		SPACER	1	
-29	1217038-2		BRACKET-CABIN DOOR STOP	1	
-30	1217038-1		BRACKET-CABIN DOOR STOP	1	
-31	1411206-7		ARM-CABIN DOOR STOP	1	
			ATTACHING PARTS		
-32	MS20615-4M10		RIVET	1	
			---*---		
-33	NAS220-16		SCREW	1	
-34	1411206-1		SPACER	2	
-35	NAS697A08		NUT	1	
-36	1411207-1		SPRING	1	
-37	1411207-2		SPRING	1	
			ATTACHING PARTS		
-38	AN525-832R7		SCREW	1	
			---*---		
-39	0711037-14		HINGE-UPPER STATIONARY	1	
-40	0711037-16		HINGE-UPPER	1	
-41	0711037-18		HINGE-LOWER STATIONARY	1	
-42	0711037-20		HINGE-LOWER	1	
-43	0711038-1		PIN-HINGE	2	
-44	S1441-2	*	SEAL 15.0 IN LG BKI REF S1441-2-15.0	1	
-45	S1116-1		SEAL 160.0 IN LG BKI REF S1116-1-160.0	1	
-46	0717010-16		WINDOW-DOOR TINTED	1	
-47	0717010-27		RETAINER-WINDOW	1	
			ATTACHING PARTS		
-48	CR163-4-2		RIVET CHERRY CY	21	
			---*---		
-49	0715033-1		BRACKET	2	
-50	1217052-2		RETAINER	1	
			ATTACHING PARTS		
-51	S1021A4-6		SCREW	6	
			---*---		
-51A	NAS1329S3K80		RIVNUT	1	
-51B	1217036-4		SUPPORT ASSY	1	B
	1217036-10		SUPPORT ASSY	1	C
	NAS697A3		NUTPLATE	1	
-52	0710638-1		WEDGE	1	
-53	1217058-1		PLATE-SPLICE	1	
			ATTACHING PARTS		
-54	NAS220-5		SCREW	5	
			---*---		
-55	1211061-61		HAT-UPHOLSTERY RETAINER	5	A
	0715061-1		RETAINER-WINDOW MOULDING UPPER	1	C
	0715061-2		RETAINER-WINDOW MOULDING 1 FWD & 1 AFT	2	C
	0715060-1		SUPPORT-WINDOW MOULDING RETAINER	7	C

NOTE. *THIS PART IS INSTALLED UNDER S1116-1-160

A---182 SERIAL 18262466 THRU 18263475
B---182 SERIAL 18262976 THRU 18263475
C---182 SERIAL 18263476 & ON

Door & Window (Cont)

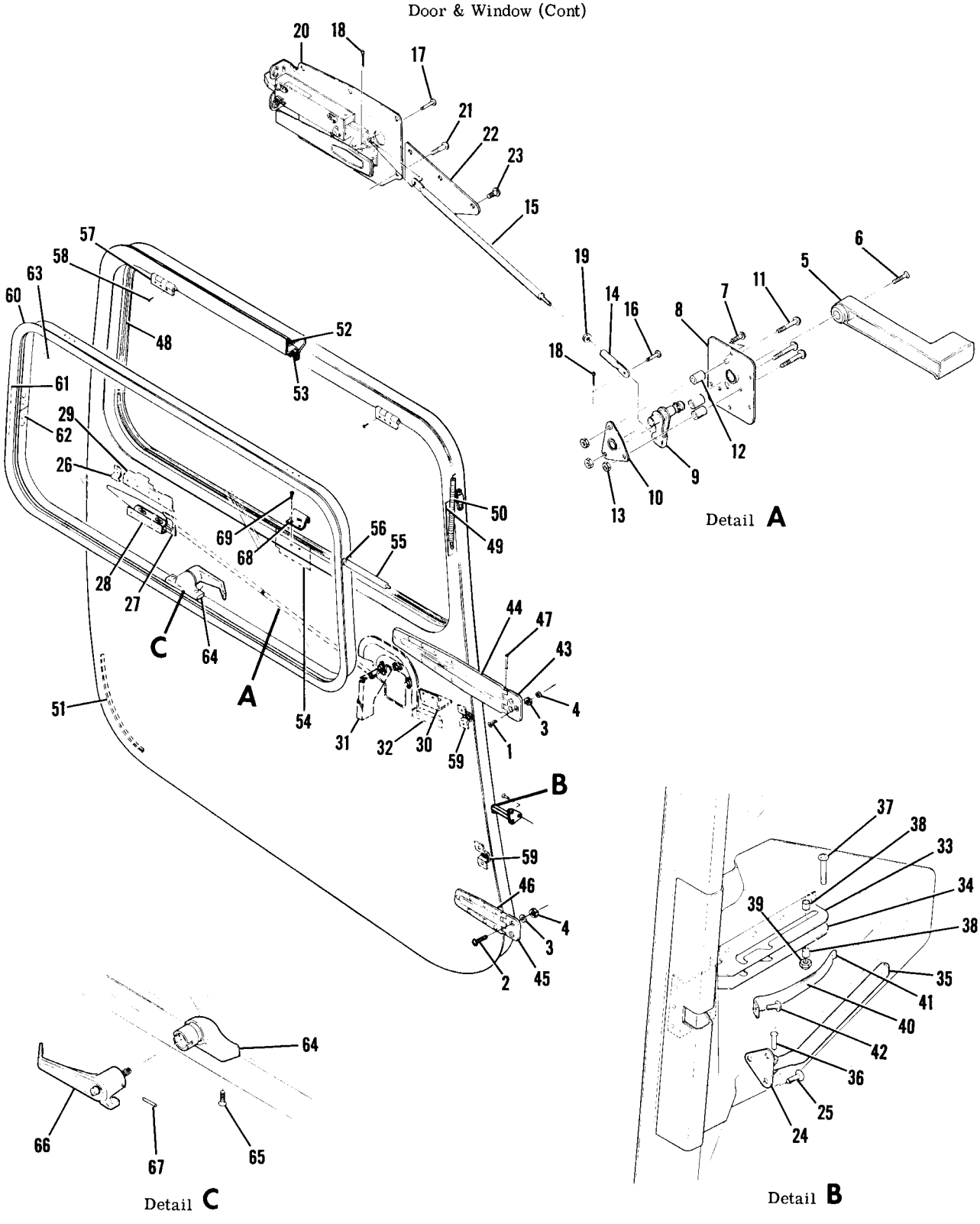

182 SERIAL 18264296 & ON

Figure 44A. Right Cabin Door Assembly-Openable Window

FIGURE AND INDEX NO.	PART NUMBER	DESCRIPTION 1 2 3 4 5 6 7	UNITS PER ASSY	USABLE ON CODE
44A-		RIGHT CABIN DOOR ASSY-OPENABLE WINDOW	NP	A
		ATTACHING PARTS		
- 1	AN509-10R14	SCREW	3	
- 2	AN507-1032R12	SCREW	2	
- 3	AN960-10L	WASHER	5	
- 4	MS21044N3	NUT	5	
		---*---		
- 5	1217053-2	HANDLE-INSIDE DOOR	1	
		ATTACHING PARTS		
- 6	NAS388-10-7P	SCREW-SELF LOCKING	1	
		---*---		
	1217046-4	BASE PLATE ASSY-RH	1	
		ATTACHING PARTS		
- 7	NAS220-5	SCREW	5	
	NAS697A08	NUTPLATE	5	
		---*---		
- 8	1217046-5	PLATE ASSY	1	
- 9	1217050-4	SHAFT ASSY	1	
-10	1217046-6	BEARING ASSY	1	
		ATTACHING PARTS		
-11	NAS220-5	SCREW	3	
-12	NAS43HT3-45	SPACER	3	
-13	MS20364-1032C	NUT	3	
		---*---		
	0517021-1	PUSH ROD ASSY	1	
-14	0517021-4	TUBE ASSY	1	
-15	0517021-5	TUBE ASSY	1	
		ATTACHING PARTS		
-16	MS20392-1C9	PIN	1	
-17	MS20392-1C15	PIN	1	
-18	MS24665-132	COTTER PIN	2	
		---*---		
-19	AN315-4R	NUT-JAM	1	
-20	SEE FIG 45	LATCH ASSY-REMOVABLE	1	
		ATTACHING PARTS		
-21	NAS220-5	SCREW	10	
	NAS697A08	NUTPLATE	5	
-22	1217058-1	PLATE-SPLICE	1	
		ATTACHING PARTS		
-23	NAS220-5	SCREW	5	
	NAS697A08	NUTPLATE	5	
		---*---		
-24	1213942-2	HINGE ASSY-DOOR STOP	1	
		ATTACHING PARTS		
-25	AN509-10R8	SCREW	3	
		---*---		
		STRUCTURE ASSY-DOOR STOP	NP	
-26	0711034-1	STOP-CABIN DOOR HANDLE	1	
-27	1217035-1	RUB BLOCK	1	
-28	0711064-5	SUPPORT ASSY-DOOR LATCH	1	
	NAS696A08	NUTPLATE	2	
-29	0717010-24	STIFFENER BRACKET ASSY-DOOR LATCH	1	
	NAS682A08	NUTPLATE	1	
-30	0717012-5	SUPPORT ASSY-ARMREST	1	
	NAS697A08	NUTPLATE	1	
-31	0717012-4	SUPPORT ASSY-ARMREST	1	
	NAS696A08	NUTPLATE	1	
-32	0715056-1	SPACER-ARMREST	1	
-33	1217038-2	BRACKET-CABIN DOOR STOP	1	
-34	1217038-1	BRACKET-CABIN DOOR STOP	1	
-35	1411206-7	ARM-CABIN DOOR STOP	1	
		ATTACHING PARTS		
-36	MS20615-4M10	RIVET	1	
		---*---		

CONTINUED ON NEXT PAGE

FIGURE AND INDEX NO.	PART NUMBER	DESCRIPTION 1 2 3 4 5 6 7	UNITS PER ASSY	USABLE ON CODE
44A-37	NAS220-16	SCREW	1	
-38	1411206-1	SPACER	2	
-39	NAS697A08	NUT	1	
-40	1411207-1	SPRING	1	
-41	1411207-2	SPRING	1	
		ATTACHING PARTS		
-42	AN525-832R7	SCREW	1	
		---*---		
-43	0711037-14	HINGE-UPPER STATIONARY	1	
-44	0711037-16	HINGE-UPPER	1	
-45	0711037-18	HINGE-LOWER STATIONARY	1	
-46	0711037-20	HINGE-LOWER	1	
-47	0711038-1	PIN-HINGE	1	
-48	1217056-3	RETAINER ASSY	1	
-49	0711021-1	PLATE	1	
	NAS696A08K	NUTPLATE	2	
-50	0711021-9	SPRING	1	
-51	S1441-2	SEAL 15.00 IN LG BK1 REF S1441-2-15.00	1	
-52	S2249-1	SEAL 160.00 IN LG BK1 REF S1116-1-160.00	1	
-53	S2108-1	SEAL 84.00 IN LG BK1 REF S2108-1-84.00	1	
-54	1217036-10	SUPPORT ASSY-DOOR PULL	1	
	NAS697A3	NUTPLATE	1	
	NAS1329S3K80	RIVNUT	1	
-55	0711021-4	ARM ASSY	1	
		ATTACHING PARTS		
-56	AN525-10R8	SCREW	1	
		---*---		
-57	0411185-11	HINGE ASSY-WINDOW	2	
		ATTACHING PARTS		
-58	CR163-4-4	RIVET-CHERRY CY	4	
-59	0715033-1	SUPPORT BRACKET-UPHOLSTERY RETAINER	2	
		ATTACHING PARTS		
	CR163-4-4	RIVET-CHERRY CY	4	
		---*---		
	0711050-28	WINDOW ASSY-RH OPENABLE	1	
-60	0711050-33	FRAME-WINDOW	1	
-61	0711050-15	TUBE SPLICE	1	
		ATTACHING PARTS		
-62	S1726-1	RIVET	2	
	S1727-1	RIVET	4	
		---*---		
-63	0717010-15	GLASS ASSY-WINDOW TINTED	1	
	0711050-5	SEAL	1	
-64	1411202-201	BRACKET ASSY-WINDOW LATCH	1	
		ATTACHING PARTS		
-65	NAS514-1032-14	SCREW	2	
	NAS543-3-34	SPACER	2	
		---*---		
-66	S1483-1	HANDLE ASSY-WINDOW	1	
-67	NAS561P3-8	PIN	1	
-68	0700685-4	STRIKER	1	
		ATTACHING PARTS		
-69	AN507-832R6	SCREW	2	
		---*---		
		A---182 SERIAL 18264296 & ON		

This page intentionally left blank.

Door and Window (Cont)

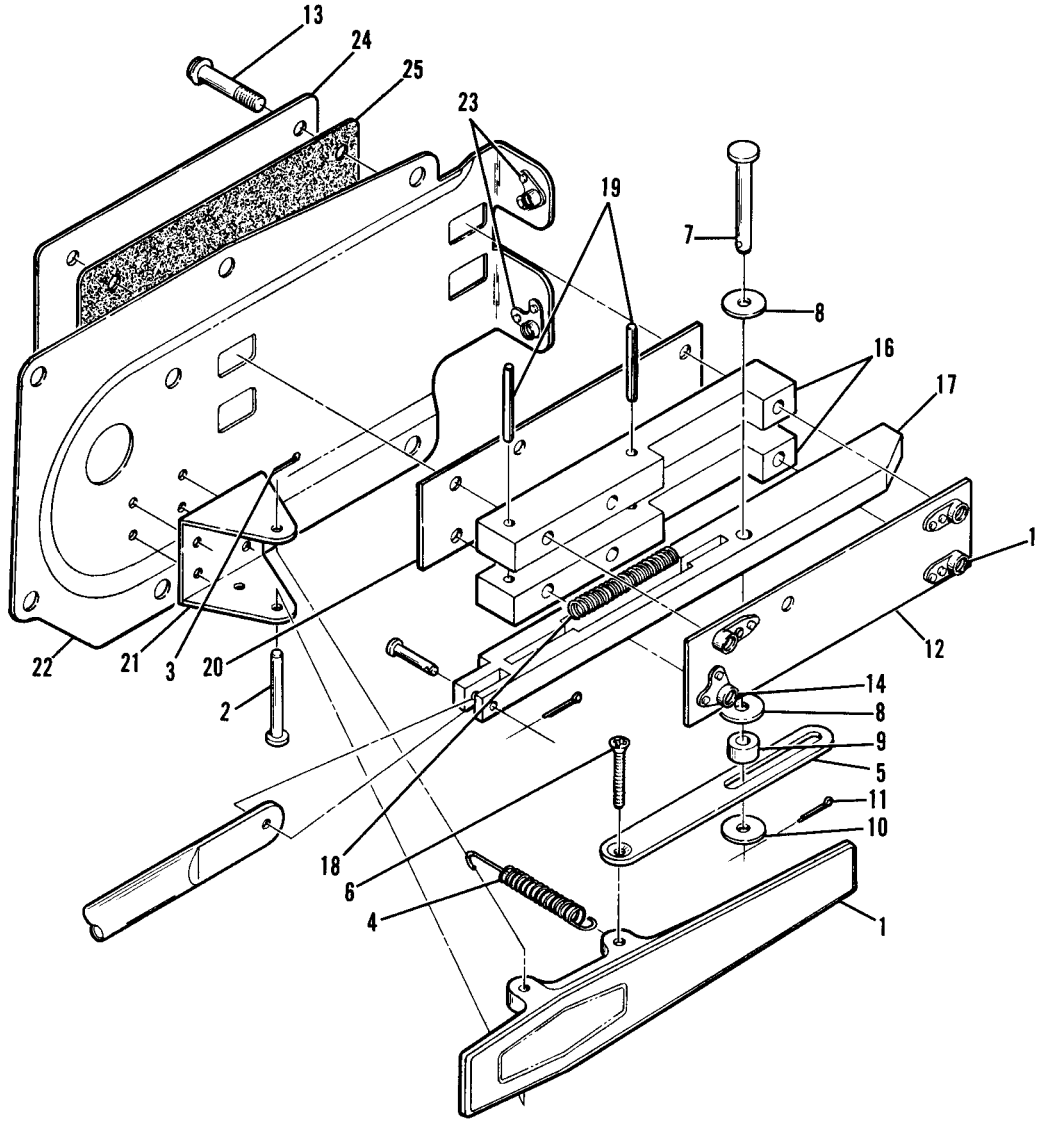

Figure 45. Cabin Door Latch Assembly

FIGURE AND INDEX NO.	PART NUMBER	DESCRIPTION 1 2 3 4 5 6 7	UNITS PER ASSY	USABLE ON CODE
45 -	1217049-1	LATCH ASSEMBLY-CABIN DOOR LH	1	
	1217049-7	LATCH ASSEMBLY-CABIN DOOR LH ALT	1	
	1217049-2	LATCH ASSEMBLY-CABIN DOOR RH	1	
	1217049-8	LATCH ASSEMBLY-CABIN DOOR RH ALT	1	
- 1	0517003-2	HANDLE-OUTSIDE DOOR	1	
		ATTACHING PARTS		
- 2	MS20392-1C33	PIN	1	
- 3	MS20665-132	COTTER PIN	1	
		---*---		
- 4	0711788-1	SPRING-DOOR HANDLE	1	
- 5	1511209-12	PULL BAR	1	
		ATTACHING PARTS		
- 6	AN507-632R12	SCREW	1	
- 7	MS20392-2C45	PIN	1	
- 8	1511209-8	WASHER	2	
- 9	NAS43DD3-12	SPACER	1	
-10	AN960D10L	WASHER	1	
-11	MS24665-132	COTTER PIN	1	
		---*---		
-12	1511206-20	BOLT GUIDE ASSEMBLY-TOP	1	
		ATTACHING PARTS		
-13	AN525-10R18	SCREW	4	
		---*---		
-14	NAS698A3	NUTPLATE	1	
-15	NAS682A3	NUTPLATE	3	
-16	1511206-11	BOLT GUIDE-SIDE	2	
-17	1511206-21	BOLT ASSEMBLY LH	1	
	1511206-22	BOLT ASSEMBLY RH	1	
		ATTACHING PARTS		
-18	1511207-1	SPRING	1	
-19	NAS561P4-16	ROLL PIN	1	
		---*---		
-20	1511206-4	BOLT GUIDE BASE	1	
-21	1511209-1	BRACKET	1	
-22	1217049-3	PLATE ASSY-LH	1	
	1217049-4	PLATE ASSY-RH	1	
-23	NAS698A08	NUTPLATE	2	
-24	1511208-16	BACKING-SHIM	1	
-25	1511208-17	BACKING	1	

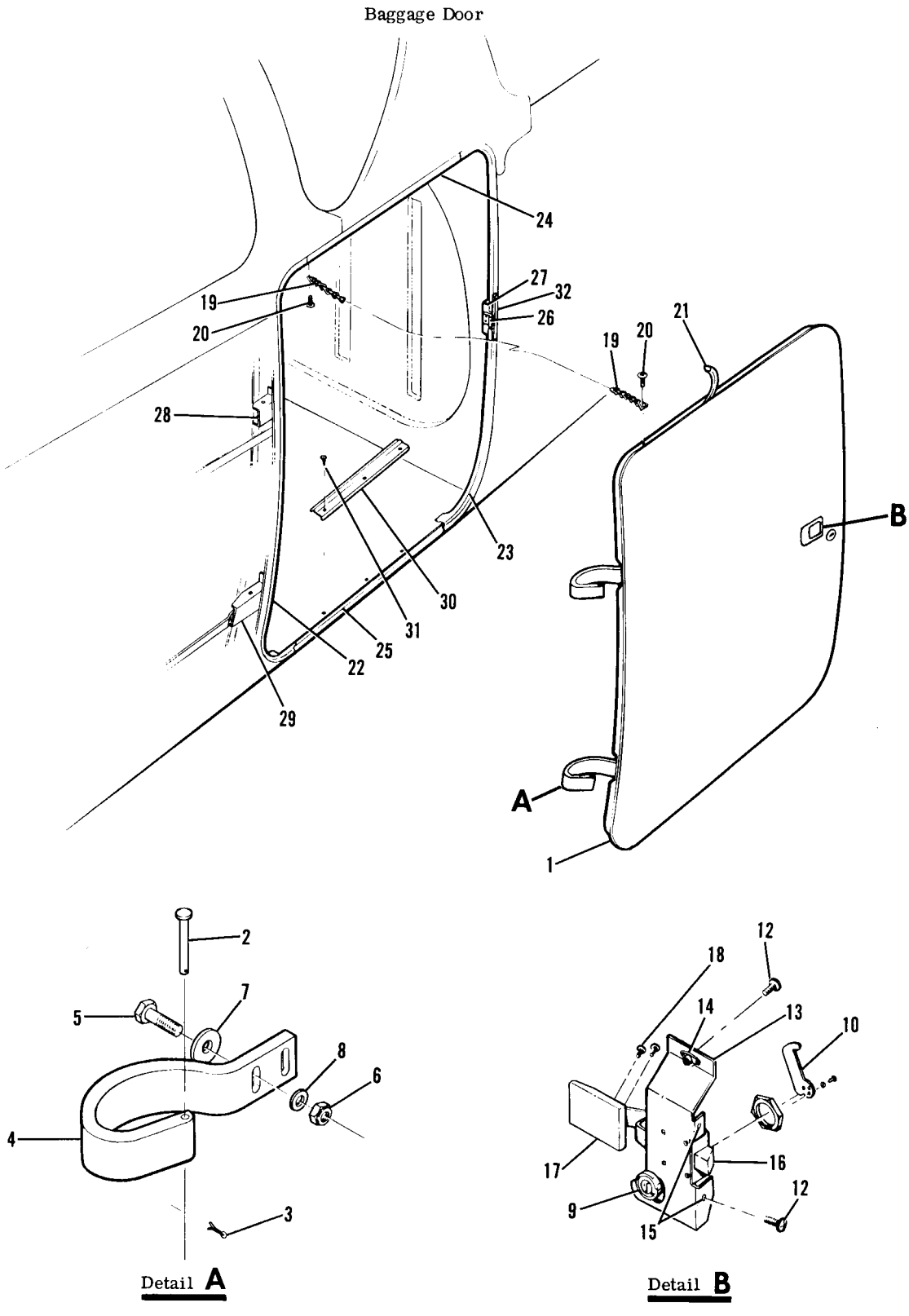

Figure 46. Baggage Door Installation

FIGURE AND INDEX NO.	PART NUMBER	DESCRIPTION 1 2 3 4 5 6 7	UNITS PER ASSY	USABLE ON CODE
46 -		BAGGAGE DOOR INSTALLATION-FUSELAGE	NP	
- 1	0711791-1	DOOR ASSY-BAGGAGE	1	
		ATTACHING PARTS		
- 2	MS20392-1C37	PIN-CLEVIS	2	
- 3	MS24665-151	PIN-COTTER	2	
		---*---		
- 4	0711643-1	HINGE	2	
		ATTACHING PARTS		
- 5	AN3-6A	BOLT	2	
- 6	MS21044N3	NUT	2	
- 7	AN970-3	WASHER	2	
- 8	AN960-10	WASHER	2	
		---*---		
- 9	C253001-0101	LOCK ASSY-BAGGAGE DOOR	1	
-10	0711111-1	CAM-DOOR LOCK	1	
-11	0711790-1	SUPPORT & LATCH ASSY	1	
		ATTACHING PARTS		
-12	AN525-832R7	SCREW	3	
		---*---		
-13	0711790-2	SUPPORT ASSY	1	
-14	MS21045L08	NUTPLATE	1	
-15	NAS1067A08	NUTPLATE	2	
-16	S1359-7	LATCH ASSY	1	
	1512404	SPACER	2	
-17	0711705-1	HANDLE-LATCH	1	
		ATTACHING PARTS		
-18	S1931-8	SCREW	2	
	0711709-1	SPACER	1	
		---*---		
-19	S1194-1-17	CHAIN	1	
		ATTACHING PARTS		
-20	AN507-832R6	SCREW	2	
	NAS680A08	NUTPLATE	1	
		---*---		
-21	S2249-1	SEAL 84.00 IN LG BKI REF S2249-1-84.00	1	
-22	0711618-3	DOOR JAMB-FWD	1	
-23	0711618-4	DOOR JAMB-AFT	1	
-24	0711673-1	DOOR SILL-UPPER	1	
-25	0711620-1	DOOR SILL-LOWER	1	
-26	0311319-1	PLATE-STRIKER	1	
		ATTACHING PARTS		
	0311319-2	SHIM	AR	
	AN515-8R8	SCREW	2	
		---*---		
-27	0711651-1	BRACKET ASSY-STRIKER PLATE	1	
	NAS696A08	NUTPLATE	2	
-28	0711628-1	HINGE BRACKET ASSY-UPPER	1	
-29	0711628-2	HINGE BRACKET-LOWER	1	
-30	0311623-1	STRIP-UPHOLSTERY RETAINER	1	
		ATTACHING PARTS		
-31	S1021Z4-6	SCREW	3	
		---*---		
-32	S1441-1	SEAL-3.0 IN LG BKI REF S-1441-1-3.0	1	

Upholstery (Cont)

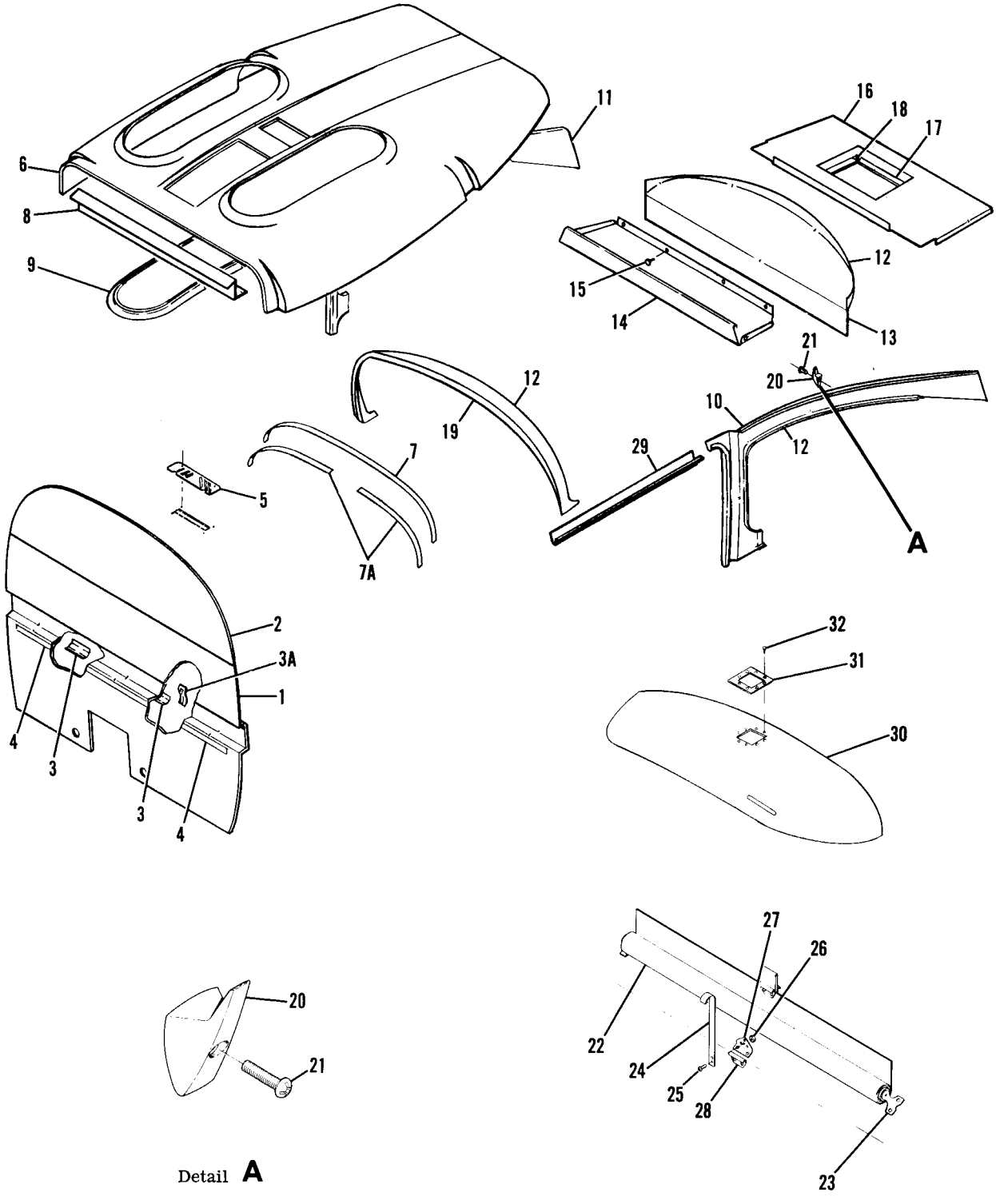

Figure 47. Cabin Top & Firewall Upholstery Installation

FIGURE AND INDEX NO.	PART NUMBER		DESCRIPTION 1 2 3 4 5 6 7	UNITS PER ASSY	USABLE ON CODE
47 -			CABIN TOP & FIREWALL UPHOLSTERY INSTALLATION	NP	A
- 1	0700762-26		SOUNDPROOFING ASSY-LWR	1	
- 2	0700762-27		SOUNDPROOFING ASSY-UPPER	1	
			ATTACHING PARTS		
	S1023A8-8		SCREW	10	
	S1067C1		WASHER	10	
			---*---		
- 3	0713019-86		RETAINER-UPHOLSTERY	2	
			ATTACHING PARTS		
	S1021Z8-8		SCREW	4	
			---*---		
- 3A	0700653-2		SHIELD-CABLE	2	
			ATTACHING PARTS		
	S1021Z6-8		SCREW	2	
			---*---		
- 4	0700103-131		STRIP	2	
			ATTACHING PARTS		
	S1021Z6-8		SCREW	4	
			---*---		
- 5	0713253-1		DEFLETOR PLATE-DEFROST	1	
			ATTACHING PARTS		
	S1021Z4-6B		SCREW	4	
			---*---		
- 6	0714002-7		HEADLINER ASSY-MOLDED	1	
	0714002-8		HEADLINER ASSY-MOLDED USED WITH SKYLIGHT	1	
			ATTACHING PARTS		
	S1021Z6-8		SCREW	3	
	S1066C1		WASHER	3	
			---*---		
- 7	0714003-1		TIARA	1	
- 7A	0714003-2		TIARA USED WITH INERTIA ONLY	2	C
			ATTACHING PARTS		
	S1022Z4-6		SCREW	4	
			---*---		
- 8	0514067-3		RETAINER-FRONT SPAR	1	
			ATTACHING PARTS		
	S1898-2		FASTENER	3	
			---*---		
- 9	0514064-1		MOLDING-SKYLIGHT WINDOW	2	
			ATTACHING PARTS		
	S1021Z4-6		SCREW	8	
			---*---		
-10	0715044-3	¤	MOLDING-LH WINDOW	1	
-11	0715044-4		MOLDING-RH WINDOW	1	
-12	S1948-2-1	%	TRIM-EXTRUSION	AR	
-13	0700702-21	¤	PANEL-CANTED	1	
-14	0711682-3		BAGGAGE SHELF-REMOVABLE	1	
			ATTACHING PARTS		
-15	H323-3-1-1		PLUNGER	4	
	H559-3-1		GROMMET	4	
	H323-4-1-1		PLUNGER CENTER HOLES	2	
	H322-4-1		GROMMET CENTER HOLES	2	
			---*---		
-16	0715023-5	¤	PANEL ASSY	1	
-17	0715023-8	¤	COVER-PANEL	1	
			ATTACHING PARTS		
-18	S2092-3		FASTENER-HOOK	AR	
	S2092-6		FASTENER-PILE	AR	
			---*---		
-19	0715010-2	¤	MOLDING-AFT WINDOW	1	
			ATTACHING PARTS		
	S1021A46-6		SCREW	6	
			---*---		
-20	0715038-1		HANGER-COAT	2	
			ATTACHING PARTS		
-21	AN520-10R12		SCREW	1	
			---*---		

CONTINUED ON NEXT PAGE

FIGURE AND INDEX NO.	PART NUMBER		DESCRIPTION 1 2 3 4 5 6 7	UNITS PER ASSY	USABLE ON CODE
47 -22	0700707-11		ROLLER CURTIN ASSY	1	
-23	1200612-5		BRACKET KIT-CURTIN	1	
			ATTACHING PARTS		
	S1021A4-16		SCREW	4	
			---*---		
-24	0700707-6		SUPPORT ASSY-CURTIN	1	
			ATTACHING PARTS		
-25	AN515-4R10		SCREW	1	
-26	NAS679A04		NUT	1	
	0700707-8		SPRING	1	
			---*---		
-27	0700707-5		BRACKET-CURTIN SUPPORT	1	
			ATTACHING PARTS		
	S1021A4-6C		SCREW	2	
			---*---		
-28	1200612-6		BRACKET-CURTIN HOOK	2	
			ATTACHING PARTS		
	S1021Z4-6C		SCREW	2	
	NAS446-1-3		NUT	2	
			---*---		
-29	0715044-5	¤	MOLDING-DOOR SILL	2	
-30	0713534-1	¤	COVER-DECK SKIN	1	B
-31	0713535-1		RETAINER-DECK SKIN COVER	1	B
			ATTACHING PARTS		
-32	S1022Z6-88		SCREW	8	B
			---*---		

NOTE. ¤ THIS PART MUST HAVE A SECOND DASH NUMBER ADDED TO DENOTE COLOR. REFER TO HOW TO ORDER INTERIOR PARTS-PAGE XIII.

NOTE. * REFER TO FIGURE 1 FOR SECOND DASH NUMBER TO DENOTE COLOR REQUIRED.

A---182 SERIAL 18262466 & ON
B---182 SERIAL 18263044 THRU 18264295
C---182 SERIAL 18263476 & ON

This page intentionally left blank.

Upholstery (Cont)

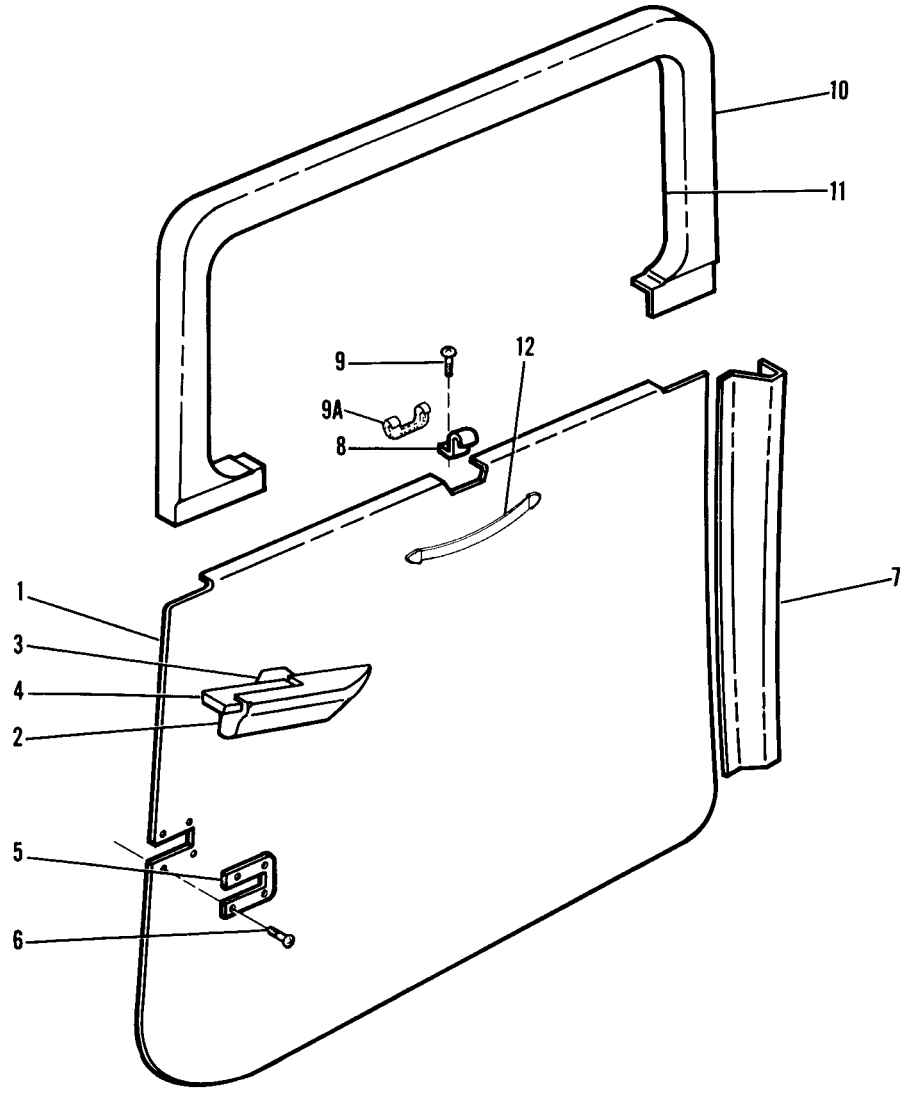

Figure 48. Cabin Door Upholstery Installation

FIGURE AND INDEX NO.	PART NUMBER	DESCRIPTION 1 2 3 4 5 6 7	UNITS PER ASSY	USABLE ON CODE
48 -		CABIN DOOR UPHOLSTERY INSTALLATION	NP	A
- 1	0715036-4 #	TRIM PANEL ASSY-RH DOOR	1	D
	0715057-12 #	TRIM PANEL ASSY-RH DOOR	1	C
	0715057-42 #	TRIM PANEL ASSY-RH DOOR OPENABLE WINDOW	1	E
	0715036-3 #	TRIM PANEL ASSY-LH DOOR	1	D
	0715057-11 #	TRIM PANEL ASSY-LH DOOR	1	C
- 2	0717011-2 #	ARMREST ASSY-RH	1	
	0717011-1 #	ARMREST ASSY-LH	1	
		ATTACHING PARTS		
	AN515-8R12	SCREW	2	
		---*---		
- 3	0705042-2 ¤	ESCUTCHEON-RH	1	
	0705042-1 ¤	ESCUTCHEON-LH	1	
- 4	SEE FIG 43 & 44	HANDLE-CABIN DOOR	2	
- 5	1715047-4 ¤	ESCUTCHEON-RH	1	
	1715047-3 ¤	ESCUTCHEON-LH	1	
		ATTACHING PARTS		
- 6	S1022A4-6	SCREW	4	
		---*---		
- 7	0714006-2 ¤	TRIM STRIP-RH	1	
	0714006-1 ¤	TRIM STRIP-LH	1	
		ATTACHING PARTS		
	S1021Z4-6	SCREW	4	
		---*---		
- 8	0700685-3	STRIKER PLATE LH DOOR & OPTIONAL RH DOOR	1	
		ATTACHING PARTS		
- 9	S1021Z8-8	SCREW	2	
		---*---		
- 9A	0715031-1 ¤	ESCUTCHEON-STRIKER PLATE LH DOOR & OPTIONAL RH DOOR	1	
-10	0715032-16 ¤	MOLDING-DOOR WINDOW RH	1	
	0715069-1 ¤	MOLDING-ASSY-DOOR WINDOW RH OPENABLE WINDOW	1	E
	0715032-15 ¤	MOLDING ASSY-DOOR WINDOW LH	1	
-11	S1948-2-1	TRIM RH ONLY	1	
-12	S1362-23	HANDLE ASSY-ASSIST	2	B
	S1362-25-1	HANDLE ASSY-ASSIST CLOUD GRAY	2	F
	S1362-25-2	HANDLE ASSY-ASSIST BLACK	2	C
	S1362-25-3	HANDLE ASSY-ASSIST OLIVE GREEN	2	F
	S1362-25-4	HANDLE ASSY-ASSIST SUNSET RED	2	F
	S1362-25-5	HANDLE ASSY-ASSIST COPEN BLUE	2	F
	S1362-25-6	HANDLE ASSY-ASSIST CHESTNUT BROWN	2	C
	S1362-25-7	HANDLE ASSY-ASSIST OLD GOLD	2	F
	S1362-25-8	HANDLE ASSY-ASSIST ORO GREEN	1	E
	S1362-25-9	HANDLE ASSY-ASSIST RUBY RED	1	E
	S1362-25-10	HANDLE ASSY-ASSIST SAPPHIRE BLUE	1	E
	S1362-25-11	HANDLE ASSY-ASSIST TOPAZ GOLD	1	E

NOTE. #THIS PART MUST HAVE A SECOND DASH NUMBER ADDED TO DENOTE COLOR. REFER TO HOW TO ORDER UPHOLSTERED PARTS-PAGE XII.

NOTE. ¤THIS PART MUST HAVE A SECOND DASH NUMBER ADDED TO DENOTE COLOR. REFER TO HOW TO ORDER INTERIOR PARTS-PAGE XIII.

A---182 SERIAL 18262466 & ON
B---182 SERIAL 18262976 THRU 18263475
C---182 SERIAL 18263476 & ON
D---182 SERIAL 18262466 THRU 18263475
E---182 SERIAL 18264296 & ON
F---182 SERIAL 18263476 THRU 18264295

Upholstery (Cont)

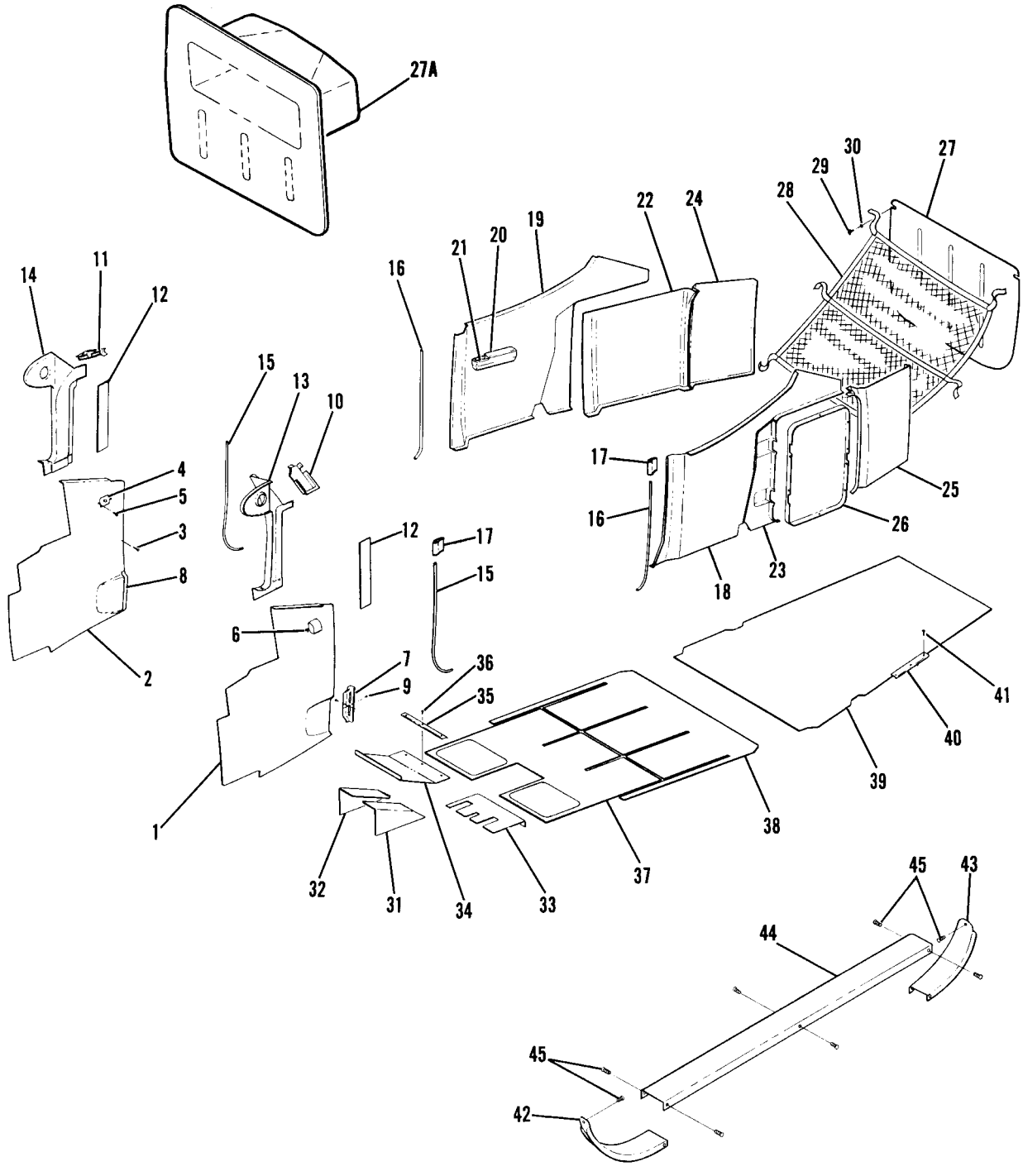

Figure 49. Upholstery Cabin Side & Floorboard Installation

FIGURE AND INDEX NO.	PART NUMBER		DESCRIPTION 1 2 3 4 5 6 7	UNITS PER ASSY	USABLE ON CODE
49 -			UPHOLSTERY INSTALLATION-CABIN SIDE & FLOORBOARD	NP	A
- 1	0715036-1	#	TRIM PANEL ASSY-FWD LH	1	B
	0715057-1	#	TRIM PANEL ASSY-FWD LH	1	C
- 2	0715036-2	#	TRIM PANEL ASSY-FWD RH	1	B
	0715057-2	#	TRIM PANEL ASSY-FWD RH	1	C
			ATTACHING PARTS		
- 3	S1021Z4-6		SCREW	AR	
			---*---		
- 4	S1762-1		ASH RECEIVER ASSY	2	
			ATTACHING PARTS		
- 5	S1021Z4-8		SCREW	2	
- 6	NAS395-1-3		NUT	2	
			---*---		
- 7	1200231-1	□	RETAINER-LH	1	
- 8	1200231-2	□	RETAINER-RH	1	
			ATTACHING PARTS		
- 9	S1021Z4-6		SCREW	4	
			---*---		
-10	0715024-1	□	COVER-LH	1	
-11	0715024-2	□	COVER-RH	1	
-12	0513425-1		PAD	2	
-13	0715044-1	□	MOLDING-LH	1	D
	0715044-9	□	MOLDING-LH	1	E
-14	0715044-2	□	MOLDING-RH	1	D
	0715044-8	□	MOULDING-RH	1	E
			ATTACHING PARTS		
	S1950-1E		SCREW	AR	
			---*---		
	0415023-4	□	ESCUTCHEON ASSY-FORWARD DOOR POST MOLDING	2	E
-15	0700668-13		WINDLACE-FWD	2	
-16	0700668-14		WINDLACE-AFT	2	
-17	0715049-1	□	SPLICE 2 FWD & 2 AFT	4	
-18	0715036-5	#	TRIM PANEL ASSY-LH	1	B
	0715057-21	#	TRIM PANEL ASSY-LH	1	C
-19	0715036-6	#	TRIM PANEL ASSY-RH	1	B
	0715057-22	#	TRIM PANEL ASSY-RH	1	C
			ATTACHING PARTS		
	S1021Z4-6		SCREW	AR	
			---*---		
-20	0715039-4	#	ARMREST ASSY-RH	1	
	0715039-3	#	ARMREST ASSY-LH	1	
			ATTACHING PARTS		
	AN520-10R12		SCREW	2	
			---*---		
-21	S1957-2		ASH RECEIVER	2	
-22	0715052-2	□	PANEL-RH	1	
			ATTACHING PARTS		
	S1021Z4-6		SCREW	AR	
			---*---		
-23	0715052-1	□	PANEL-LH	1	
			ATTACHING PARTS		
	S1021Z4-6		SCREW	AR	
			---*---		
-24	0715023-16	□	PANEL ASSY-RH	1	
-25	0715023-3	□	PANEL ASSY-LH	1	
			ATTACHING PARTS		
	S1021Z4-6		SCREW	AR	
			---*---		
-26	0700702-5	□	PANEL-BAGGAGE DOOR	1	
			ATTACHING PARTS		
	S1021Z4-6		SCREW	8	
			---*---		
-27	0715023-1	□	PANEL ASSY-AFT WALL	1	B
-27A	0715053-1	□	PANEL ASSY-AFT WALL	1	C
-28	1215042-1		RETAINING NET	1	
			ATTACHING PARTS		
-29	1211203-1		EYEBOLT	6	
-30	1200127-1		WASHER	6	
			---*---		

CONTINUED ON NEXT PAGE

FIGURE AND INDEX NO.	PART NUMBER		1 2 3 4 5 6 7 DESCRIPTION	UNITS PER ASSY	USABLE ON CODE
49 -31	0715043-7	#	CARPET ASSY-TUNNEL LH	1	
-32	0715043-8	#	CARPET ASSY-TUNNEL RH	1	
	S2092-1		FASTENER-HOOK	AR	
	S2092-2		FASTENER-PILE	AR	
-33	0715043-6	#	CARPET ASSY-RUDDER PEDEL SHIELD LH	1	
	S2092-1		FASTENER-HOOK	AR	
	S2092-2		FASTENER-PILE	AR	
	0713715-1		SHIELD-RUDDER PEDAL LH	1	
			ATTACHING PARTS		
	S1021Z8-8		SCREW	8	
			---*---		
-34	0715043-5	#	CARPET ASSY-RUDDER BAR SHIELD RH	1	
	0715043-9	#	CARPET ASSY-RUDDER PEDAL SHIELD DUAL CONTROL ONLY	1	
	S2092-1		FASTENER-HOOK	AR	
	S2092-2		FASTENER-PILE	AR	
	0713703-1		SHIELD-RUDDER BAR RH	1	
	0713715-2		SHIELD-RUDDER PEDAL DUAL CONTROL ONLY	1	
			ATTACHING PARTS		
	S1021Z8-8		SCREW	6	
	AN515-8R6		SCREW	1	
	NAS62D-8		WASHER	1	
	NAS1022A08		NUT	1	
			---*---		
-35	0713703-2		RETAINER-CARPET	1	
			ATTACHING PARTS		
-36	S1023Z8-8B		SCREW	3	
			---*---		
-37	0715043-1	#	CARPET ASSY-FWD	1	
-38	0715043-3	#	CARPET ASSY-CENTER	1	
-39	0715043-4	#	CARPET ASSY-AFT	1	
-40	0311623-1		SCUFF PLATE-BAGGAGE DOOR	1	
			ATTACHING PARTS		
-41	S1021Z4-4		SCREW	3	
			---*---		
-42	0711804-1		SCUFF PLATE-DOOR SILL FWD LH	1	F
	0711804-2		SCUFF PLATE-DOOR SILL FWD RH	1	F
	1211527-11		SCUFF PLATE-DOOR SILL FWD LH	1	E
	1211527-12		SCUFF PLATE-DOOR SILL FWD RH	1	E
-43	0711804-3		SCUFF PLATE-DOOR SILL AFT LH	1	F
	0711804-4		SCUFF PLATE-DOOR SILL AFT RH	1	F
	1211527-13		SCUFF PLATE-DOOR SILL AFT LH	1	E
	1211527-14		SCUFF PLATE-DOOR SILL AFT RH	1	E
-44	0711804-5		SCUFF PLATE-DOOR SILL CENTER	2	F
	1211527-6		SCUFF PLATE-DOOR SILL CENTER	2	E
			ATTACHING PARTS		
-45	S1021Z6-8		SCREW	8	F
	S1021Z4-8C		SCREW	9	E
	S1021Z6-8		SCREW	3	E
			---*---		

NOTE. □THIS PART MUST HAVE A SECOND DASH NUMBER ADDED TO DENOTE COLOR. REFER TO HOW TO ORDER INTERIOR PARTS-PAGE XIII.

NOTE. #THIS PART MUST HAVE A SECOND DASH NUMBER ADDED TO DENOTE COLOR. REFER TO HOW TO ORDER UPHOLSTERED PARTS-PAGE XII.

A---182 SERIAL 18262466 & ON
B---182 SERIAL 18262466 THRU 18263475
C---182 SERIAL 18263476 & ON
D---182 SERIAL 18262446 THRU 18264295
E---182 SERIAL 18264161 & ON
F---182 SERIAL 18263476 THRU 18264160

This page intentionally left blank.

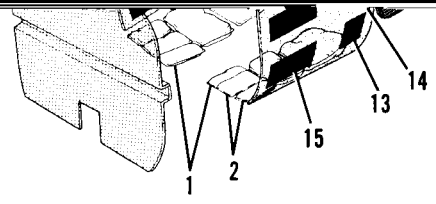

18262466 THRU 18263475

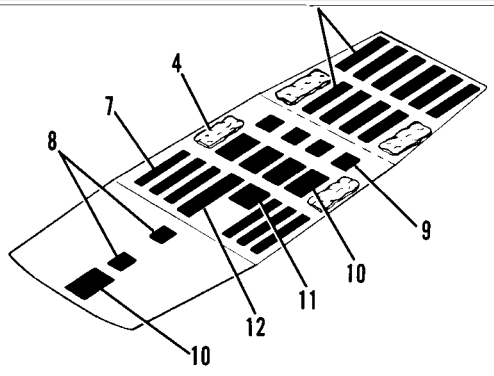

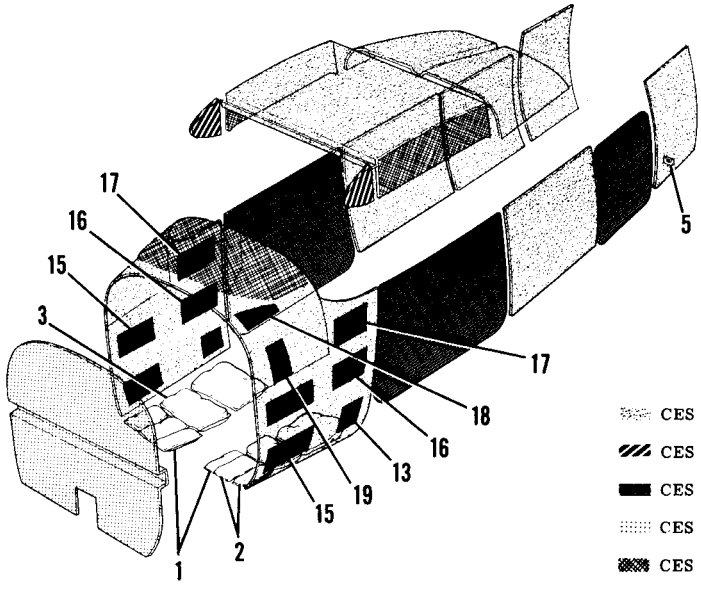

18263476 & ON

CES 1109 CLASS 1A Soundproofing - Fiberglass (See Parts Listings)

CES 1109 CLASS 1B Soundproofing - Fiberglass (See Parts Listings)

CES 1109 CLASS 1C Soundproofing - Fiberglass (See Parts Listings)

CES 1109 CLASS 1G Soundproofing - Fiberglass (See Parts Listings)

CES 1109 CLASS 1H Soundproofing - Fiberglass (See Parts Listings)

CES 1109 CLASS IV Dampening Compound (See Parts Listings)

Figure 50. Fuselage Soundproofing Installation

FIGURE AND INDEX NO.	PART NUMBER	DESCRIPTION 1 2 3 4 5 6 7	UNITS PER ASSY	USABLE ON CODE
50 -		SOUNDPROOFING INSTALLATION-FUSELAGE	NP	A
- 1	0700762-6	BAG-SOUNDPROOFING	2	
- 2	0700762-5	BAG-SOUNDPROOFING	4	
- 3	0700762-4	BAG-SOUNDPROOFING	4	
- 4	0700762-21	BAG-SOUNDPROOFING	4	
- 5	0700762-9	SEAL-BAGGAGE DOOR	1	
- 6	0700762-22	PANEL-SOUNDPROOFING	10	
- 7	0700762-23	PANEL-SOUNDPROOFING	6	
- 8	1200217-4	PANEL-SOUNDPROOFING	2	
- 9	1200217-5	PANEL-SOUNDPROOFING	4	
-10	1200217-26	PANEL-SOUNDPROOFING	5	
-11	1700127-1	PANEL-SOUNDPROOFING	1	
-12	1700127-4	PANEL-SOUNDPROOFING	1	
-13	1700127-7	PANEL-SOUNDPROOFING	2	
-14	1700127-8	PANEL-SOUNDPROOFING	4	B
-15	1700127-9	PANEL-SOUNDPROOFING	4	
-16	1700127-8	PANEL-SOUNDPROOFING	2	C
-17	1700127-22	PANEL-SOUNDPROOFING	2	C
-18	1700127-23	PANEL-SOUNDPROOFING LH ONLY	1	C
-19	1700127-24	PANEL-SOUNDPROOFING LH ONLY	1	C
	CES1109CLASS1A *	SOUNDPROOFING-FIBERGLASS MAT 1 IN. THICK BKI	AR	
	CES1109CLASS1B *	SOUNDPROOFING-FIBERGLASS MAT 1 IN. THICK	AR	
	CES1109CLASS1C *	SOUNDPROOFING-FIBERGLASS MAT 1/2 IN. THICK	AR	
	CES1109CLASS1G *	SOUNDPROOFING-FIBERGLASS MAT 1 IN. THICK BKI	AR	
	CES1109CLASS1H *	SOUNDPROOFING-FIBERGLASS MAT 1 IN. THICK BKI	AR	
	CES1109CLASS4 *	SOUNDPROOFING-POLYMERIC SHEET .035 IN. THICK BKI	AR	

NOTE. *GIVE DIMENSIONS WHEN ORDERING

A---182 SERIAL 18262466 & ON
B---182 SERIAL 18262466 THRU 18263475
C---182 SERIAL 18262476 & ON

Front Seat (Cont)

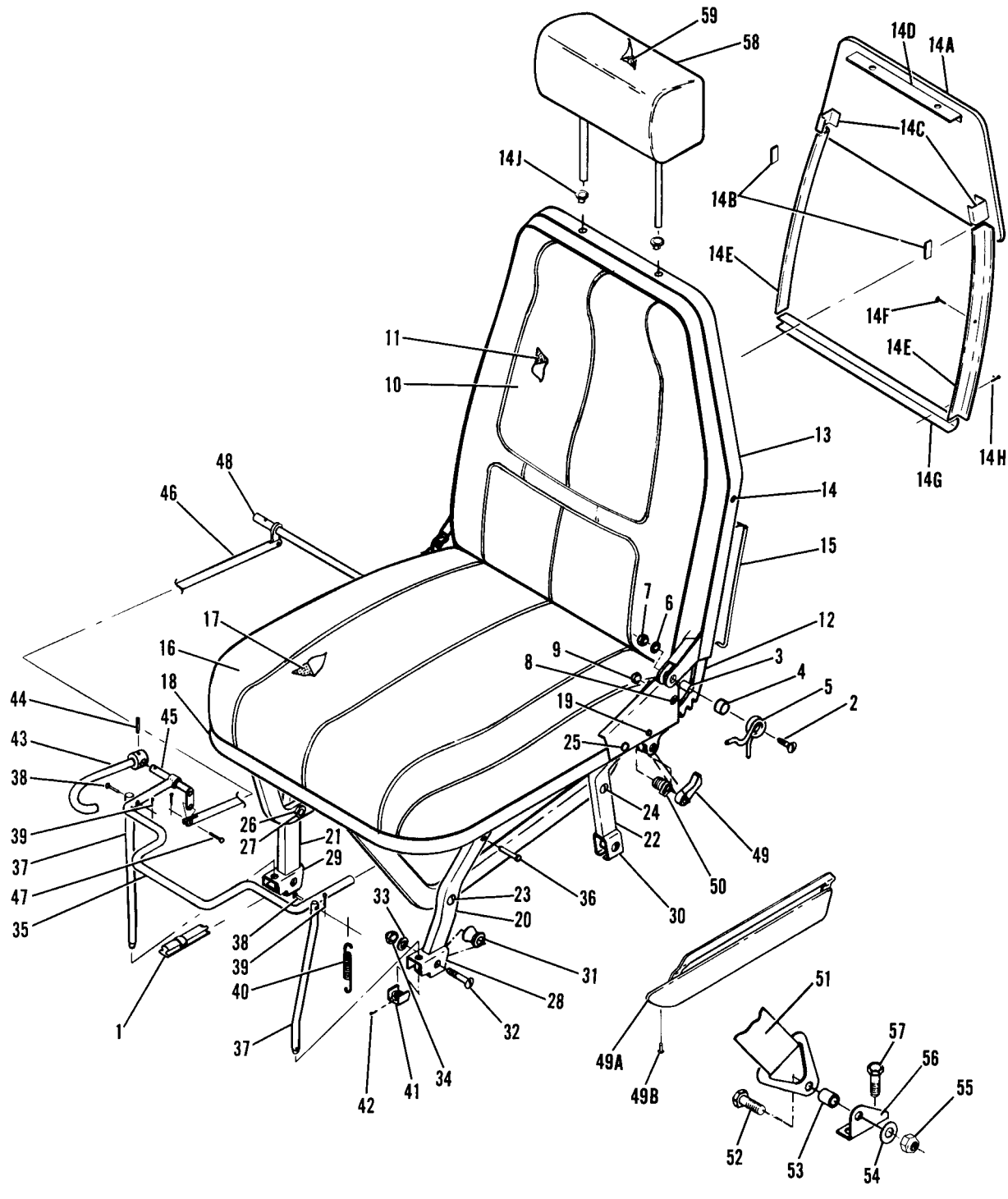

Figure 51. Pilot & Co-Pilot Seat Installation - Standard

FIGURE AND INDEX NO.	PART NUMBER		DESCRIPTION 1 2 3 4 5 6 7	UNITS PER ASSY	USABLE ON CODE
51 -			PILOT & CO-PILOT SEAT INSTL STANDARD	NP	A
	0714012-1	#	SEAT ASSEMBLY-PILOT & CO-PILOT	1	B
	0714019-1	#	SEAT ASSEMBLY-PILOT & CO-PILOT	1	D
	0714019-10	#	SEAT ASSEMBLY-PILOT & CO-PILOT	1	E
			ATTACHING PARTS		
- 1	0713074-1		STOP-SEAT	2	
	MS20392-1C21		PIN-CLEVIS	2	
	MS24665-151		PIN-COTTER	2	
			---*---		
	0714012-201	#	BACK ASSEMBLY-UPHOLSTERED SEAT	1	B
	0714019-3	#	BACK ASSEMBLY-UPHOLSTERED SEAT	1	D
	0714019-12	#	BACK ASSEMBLY-UPHOLSTERED SEAT	1	E
			ATTACHING PARTS		
- 2	AN23-19A		BOLT	2	
- 3	1414104-4		BUSHING	2	
- 4	0711668-1		BUSHING	2	
- 5	0711667-1		SPRING	2	
- 6	AN960-10L		WASHER	2	
- 7	S1914-8		NUT EN	2	
- 8	AN507-832R14		SCREW	2	
- 9	NAS679A08		NUT	2	
			---*---		
-10	0714012-5	#	COVER ASSEMBLY-SEAT BACK	1	B
	0714019-7	#	COVER ASSEMBLY-SEAT BACK	1	D
	0714019-16	#	COVER ASSEMBLY-SEAT BACK	1	E
-11	0714012-8		CUSHION ASSY-SEAT BACK	1	B
	0714019-5		CUSHION ASSY-SEAT BACK	1	D
	0714019-14		CUSHION ASSY-SEAT BACK	1	E
-12	1414230-1		CAM-SEAT BACK RECLINE	1	
-13	0514076-1	□	TRIM ASSY-SEAT BACK	1	B
			ATTACHING PARTS		
-14	S1021A4-6		SCREW	5	B
			---*---		
-14A	0514100-1		FORMER ASSY	1	C
			ATTACHING PARTS		
-14B	0514099-3		CLIP	2	C
			---*---		
-14C	0514099-1		BRACKET	2	C
-14D	0514099-2		BRACKET	1	C
-14E	0514102-7		RETAINER	2	C
			ATTACHING PARTS		
-14F	S1021A4-6		SCREW	2	C
			---*---		
-14G	0514112-2	□	TRIM	1	C
			ATTACHING PARTS		
-14H	S1021A4-6		SCREW	3	C
			---*---		
-14J	0514110-1		GROMMET	2	C
-15	1214062-5	#	POCKET ASSY-MAGAZINE	1	
			ATTACHING PARTS		
	S1021A4-6		SCREW	2	
			---*---		
	0714012-200	#	BOTTOM ASSEMBLY-UPHOLSTERED SEAT	1	B
	0714019-2	#	BOTTOM ASSEMBLY-UPHOLSTERED SEAT	1	D
	0714019-11	#	BOTTOM ASSEMBLY-UPHOLSTERED SEAT	1	E
-16	0714012-4	#	COVER ASSY-SEAT BOTTOM	1	B
	0714019-6	#	COVER ASSY-SEAT BOTTOM	1	D
	0714019-15	#	COVER ASSY-SEAT BOTTOM	1	E
-17	0514075-2		CUSHION ASSY-SEAT BOTTOM	1	B
	0714019-4		CUSHION ASSY-SEAT BOTTOM	1	D
	0714019-13		CUSHION ASSY-SEAT BOTTOM	1	E
-18	0514058-1	□	RETAINER-SEAT BOTTOM	1	B
			ATTACHING PARTS		
	S1021A4-6		SCREW	5	B
			---*---		
-19	AN23-15A		BOLT	2	
	MS20364-1032		NUT	2	
-20	1414103-2		LEG ASSY-FWD LH	1	
-21	1414103-45		LEG ASSY-FWD RH	1	

CONTINUED ON NEXT PAGE

FIGURE AND INDEX NO.	PART NUMBER		DESCRIPTION 1 2 3 4 5 6 7	UNITS PER ASSY	USABLE ON CODE
51 -22	1414103-6		LEG-AFT SEAT	2	
			ATTACHING PARTS		
-23	AN24-13A		BOLT-FORWARD LEG	2	
-24	AN24-13A		BOLT-AFT LEG LOWER	1	
-25	AN24-16A		BOLT-AFT LEG UPPER	1	
-26	AN936A416		WASHER UNDER BOLT HEAD	2	
	AN936A616		WASHER UNDER NUT	2	
-27	1414112-1		NUT	2	
			---*---		
-28	1414104-39		HOUSING-SEAT ROLLER FWD LH	1	
-29	1414104-61		HOUSING-SEAT ROLLER FWD RH	1	
-30	1414104-41		HOUSING-SEAT ROLLER AFT LH	1	
	1414104-42		HOUSING-SEAT ROLLER AFT RH	1	
-31	1414100-212		KIT-SEAT ROLLER	4	
			ATTACHING PARTS		
-32	AN23-19A		BOLT	1	
-33	AN960-10L		WASHER	1	
-34	S1914-8		NUT	1	
			---*---		
-35	0514052-1		HANDLE ASSY-SEAT ADJUST	1	
			ATTACHING PARTS		
-36	MS20392-2C43		PIN	1	
	MS24665-132		PIN-COTTER	1	
			---*---		
-37	0514066-1		PIN-SEAT ADJUST	2	
			ATTACHING PARTS		
-38	MS20392-1C23		PIN	1	
-39	MS24665-132		PIN-COTTER	1	
			---*---		
-40	1414116-1		SPRING-SEAT ADJUST	1	
-41	1414104-8		BRACKET	2	
-42	NAS561-2-12		ROLL PIN	2	
-43	1200504-3		HANDLE ASSY-RECLINING ADJUSTMENT	1	
			ATTACHING PARTS		
-44	NAS561-3-8		ROLL PIN	1	
			---*---		
-45	1200503-1		ARM ASSY-SEAT BACK ADJUST	1	
-46	1514223-28		LINK-SEAT BACK ADJUST	1	
			ATTACHING PARTS		
-47	MS20392-1C9		PIN	2	
	MS24665-132		PIN-COTTER	2	
			---*---		
-48	1414223-34		TUBE ASSY-TORQUE	1	
-49	0514043-2		PAWL-SEAT BACK ADJUST REPLACE IN PAIRS ONLY	2	
			ATTACHING PARTS		
	NAS561C3-10		ROLL PIN	1	
			---*---		
-50	1414107-1		SPRING	1	
-50A	1714101-3		TRIM ASSY-SEAT SKIRT LH	1	E
	1714101-4		TRIM ASSY-SEAT SKIRT RH	1	E
			ATTACHING PARTS		
-50B	S1021A4-6		SCREW	6	E
			---*---		
-51	S2275CC103	‡*	BELT ASSY-FRONT SEAT BROWN	2	F
	S2275BB103	‡*	BELT ASSY-FRONT SEAT BLUE	2	F
	S2275AA103	‡*	BELT ASSY-FRONT SEAT GREEN	2	F
	S2275T103	‡*	BELT ASSY-FRONT SEAT RED	2	F
	S2275DD103	‡*	BELT ASSY-FRONT SEAT GOLD	2	F
	S2275B103	‡*	BELT ASSY-FRONT SEAT BLACK	2	F
	S2275CC103		BELT ASSY-FRONT SEAT CHESTNUT BROWN	2	E
	S2275FF103		BELT ASSY-FRONT SEAT SAPPHIRE BLUE	2	E
	S2275GG103		BELT ASSY-FRONT SEAT ORO GREEN	2	E
	S2275EE103		BELT ASSY-FRONT SEAT RUBY RED	2	E
	S2275HH103		BELT ASSY-FRONT SEAT TOPAZ GOLD	2	E
	S2275B103		BELT ASSY-FRONT SEAT BLACK	2	E
			ATTACHING PARTS		
-52	AN4-5A		BOLT	2	
-53	NAS43HT4-12		SPACER	2	B
	NAS43HT4-10		SPACER	2	C
-54	AN960-416L		WASHER	2	
-55	MS21042L4		NUT	2	
			---*---		

CONTINUED ON NEXT PAGE

FIGURE AND INDEX NO.	PART NUMBER	1 2 3 4 5 6 7 DESCRIPTION	UNITS PER ASSY	USABLE ON CODE
51 -56	0510205-5	FITTING-SEAT BELT INBD LH & OUTBD RH	2	B
	0510205-7	FITTING-SEAT BELT INBD LH & OUTBD RH	2	C
	0510205-6	FITTING-SEAT BELT OUTBD LH & INBD RH	2	B
	0510205-8	FITTING-SEAT BELT OUTBD LH & INBD RH	2	C
		ATTACHING PARTS		
-57	AN3-4A	BOLT	2	B
	AN4-4A	BOLT	2	C
		---*---		
-58	1215073-1 #	HEADREST ASSY	2	
-59	1215073-10 #	COVER-HEADREST	1	

NOTE. #THIS PART MUST HAVE A SECOND DASH NUMBER ADDED TO DENOTE COLOR. REFER TO HOW TO ORDER UPHOLSTERED PARTS-PAGE X11.

NOTE. ¤THIS PART MUST HAVE A SECOND DASH NUMBER ADDED TO DENOTE COLOR. REFER TO HOW TO ORDER INTERIOR PARTS-PAGE X111.

NOTE. *SEE FIGURE 99 FOR SHOULDER HARNESS INSTL.

NOTE. %WHEN INITIALLY ORDERING SEAT BELT OR SHOULDER HARNESS FOR AIRCRAFT PRIOR TO SERIAL 18264256, BOTH SEAT BELT & SHOULDER HARNESS MUST BE REPLACED

A---182 SERIAL 18262466 & ON
B---182 SERIAL 18262466 THRU 18263475
C---182 SERIAL 18263476 & ON
D---182 SERIAL 18263476 THRU 18264295
E---182 SERIAL 18264296 & ON
F---182 SERIAL 18262466 THRU 18264295

Front Seat (Cont)

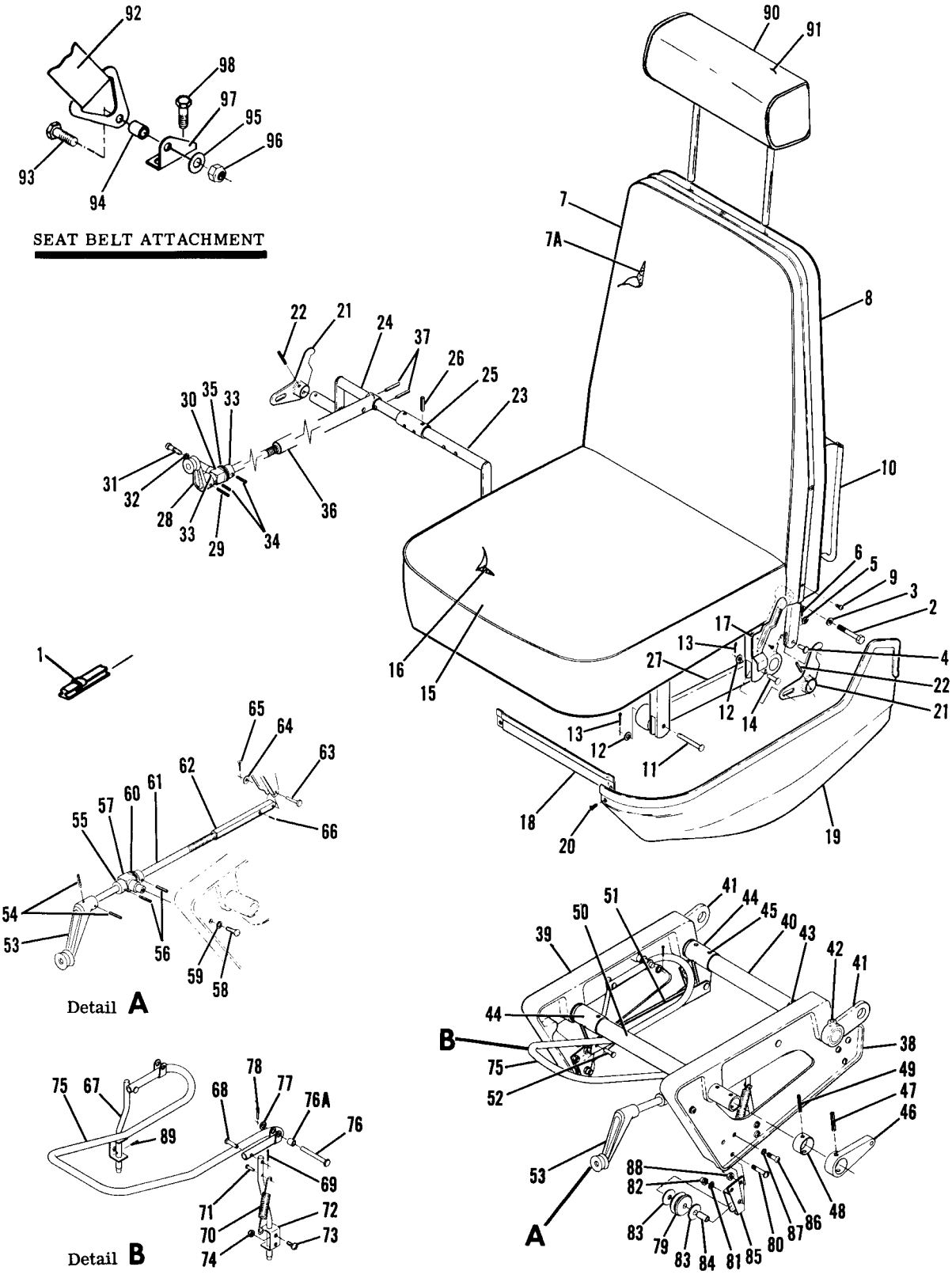

182 SERIAL 18262466 THRU 18263475

Figure 52. Infinite Adjust Front Seat Installation

FIGURE AND INDEX NO.	PART NUMBER		DESCRIPTION 1 2 3 4 5 6 7	UNITS PER ASSY	USABLE ON CODE
52 -			FRONT SEAT INSTALLATION-INFINITE ADJUST	NP	A
	0714014-2	#	FRONT SEAT ASSY-INFINITE ADJUST COPILOT	1	
	0714014-1	#	FRONT SEAT ASSY-INFINITE ADJUST PILOT	1	
			ATTACHING PARTS		
- 1	0713074-1		STOP-SEAT	1	
	MS20392-1C21		PIN	1	
	MS24665-151		PIN-COTTER	1	
			---*---		
			BACK ASSY-UPHOLSTERED SEAT	NP	
			ATTACHING PARTS		
- 2	AN3-17A		BOLT	2	
- 3	AN960-10L		WASHER	4	
	0514029-2		SPACER	2	
	MS21044N3		NUT	2	
- 4	MS20392-2C11		PIN	2	
- 5	AN960-10L		WASHER	2	
- 6	MS24665-132		COTTER PIN	2	
			---*---		
- 7	0714014-4	#	COVER ASSY-SEAT BACK	1	
- 7A	2014008-5		CUSHION ASSY-SEAT BACK	1	
- 8	0514083-1	□	TRIM ASSY-SEAT BACK	1	
			ATTACHING PARTS		
- 9	S1021A4-6		SCREW	5	
			---*---		
-10	1214062-5	#	POCKET ASSY-MAGAZINE	1	
			BOTTOM ASSY-UPHOLSTERED SEAT	NP	
			ATTACHING PARTS		
-11	MS20392-3C49		PIN	2	
-12	AN960-416L		WASHER	4	
-13	MS24665-134		PIN-COTTER	4	
-14	MS20392-3C17		PIN	2	
			---*---		
-15	0714014-3	#	COVER ASSY-SEAT BOTTOM	1	
-16	0714014-5		CUSHION ASSY-SEAT BOTTOM	1	
-17	0514101-1		STIFFENER-LH	1	
	0514101-2		STIFFENER-RH	1	
			ATTACHING PARTS		
	S1021A4-6		SCREW	2	
			---*---		
-18	0514017-3	□	TRIM-SEAT BOTTOM FWD	1	
-19	0714010-1	□	TRIM-SEAT BOTTOM LH	1	
	0714010-2	□	TRIM-SEAT BOTTOM RH	1	
			ATTACHING PARTS		
-20	S1021A4-6		SCREW	6	
			---*---		
-21	0514030-4		BELLCRANK ASSY-SEAT BACK ADJUST	2	
			ATTACHING PARTS		
-22	NAS561P4-12		PIN	2	
			---*---		
-23	1714074-13		CRANK-WELD ASSY-LH	1	
-24	1714074-14		CRANK-WELD ASSY-RH	1	
-25	1714074-6		SPLICE	1	
			ATTACHING PARTS		
-26	NAS561P6-12		PIN	4	
			---*---		
-27	0514060-5		BRACKET-SEAT PIVOT	2	
-28	0514036-1		HANDLE ASSY-SEAT BACK ADJUST	1	
			ATTACHING PARTS		
-29	NAS561P4-12		PIN	1	
			---*---		
-30	0514033-1		BEARING BLOCK	1	
			ATTACHING PARTS		
-31	AN520-10R8		SCREW	1	
-32	AN960-10L		WASHER	1	
			---*---		
-33	1200138-2		COLLAR	2	
			ATTACHING PARTS		
-34	NAS561P4-12		PIN	1	
			---*---		

CONTINUED ON NEXT PAGE

FIGURE AND INDEX NO.	PART NUMBER		1 2 3 4 5 6 7 DESCRIPTION	UNITS PER ASSY	USABLE ON CODE
52 -35	S2013-2		BEARING	1	
	S2014-2		RACE-BEARING	2	
-36	0514089-1		JACK SCREW ASSY	1	
			ATTACHING PARTS		
-37	NAS561P4-15		PIN	2	
			---*---		
	0514051-2	**	PEDESTAL ASSY-CO-PILOT SEAT	1	
	0514051-1	**	PEDESTAL ASSY-PILOT SEAT	1	
-38	0514035-17		PEDESTAL-LH	1	
-39	0514035-18		PEDESTAL-RH	1	
-40	0514026-2		TORQUE TUBE-REAR	1	
-41	0514034-1		BELLCRANK-REAR TORQUE TUBE	2	
			ATTACHING PARTS		
-42	NAS561P6-28		PIN	1	
			---*---		
-43	0514028-6		BELLCRANK ASSY-REAR TORQUE TUBE INBD	1	
			ATTACHING PARTS		
	NAS561P8-18		PIN	2	
			---*---		
-44	0514028-5		BELLCRANK ASSY-REAR TORQUE TUBE OUTBD	1	
			ATTACHING PARTS		
-45	NAS561P8-18		PIN	2	
			---*---		
-46	0700633-5		BELLCRANK-FWD TORQUE TUBE	2	
			ATTACHING PARTS		
-47	NAS561P6-22		PIN	2	
			---*---		
-48	1200136-1		COLLAR	3	
			ATTACHING PARTS		
-49	NAS561P6-18		PIN	1	
			---*---		
-50	0514026-4		TORQUE TUBE-FWD	1	
-51	0514032-1		CHANNEL-TORQUE TUBE INTERCONNECT	1	
			ATTACHING PARTS		
-52	MS20392Z-2C17		PIN	2	
	AN960-10L		WASHER	2	
	MS24665-132		COTTER PIN	2	
			---*---		
-53	1200159-3		HANDLE ASSY-VERTICAL ADJUST	1	
			ATTACHING PARTS		
-54	NAS561P4-12		PIN	2	
			---*---		
-55	1200138-2		COLLAR	2	
			ATTACHING PARTS		
-56	NAS561P4-12		PIN	1	
			---*---		
-57	0514033-2		BEARING BLOCK	1	
			ATTACHING PARTS		
-58	AN520-10R8		SCREW	1	
-59	AN960-10L		WASHER	1	
			---*---		
-60	S2013L2		BEARING	1	
	S2014-2		RACE-BEARING	2	
-61	0514027-21		SCREW ASSY-VERTICAL ADJUST	1	
-62	1514119-3		NUT-VERTICAL ADJUST	1	
			ATTACHING PARTS		
-63	MS20392-2C37		PIN	1	
-64	AN960-10		WASHER	1	
-65	MS24665-132		COTTER	1	
-66	NAS561P4-8		PIN	1	
			---*---		
-67	1714067-5		PIN-SEAT ADJUST	2	
			ATTACHING PARTS		
-68	MS20392-1C21		PIN	1	
-69	MS24665-132		COTTER PIN	1	
			---*---		

CONTINUED ON NEXT PAGE

FIGURE AND INDEX NO.	PART NUMBER		DESCRIPTION 1 2 3 4 5 6 7	UNITS PER ASSY	USABLE ON CODE
52 -70	1414116-1		SPRING LH SIDE ONLY	1	
			ATTACHING PARTS		
-71	MS20392-1C11		PIN	1	
			---*---		
-72	1714061-1		GUIDE-PIN	2	
			ATTACHING PARTS		
-73	AN515-8R6		SCREW	2	
-74	NAS679A08		NUT	2	
			---*---		
-75	0514090-4		HANDLE-SEAT ADJUST	1	
			ATTACHING PARTS		
-76	MS20392-2C55		PIN	2	
-76A	NAS43DD3-18		SPACER	2	
-77	AN960-10L		WASHER	2	
-78	MS24665-132		COTTER PIN	2	
			---*---		
-79	S1704-1		ROLLER-SEAT	4	
			ATTACHING PARTS		
-80	AN23-20A		BOLT	1	
-81	AN960-10L		WASHER	1	
-82	S1914-8		NUT	1	
-83	1714000-22		WASHER	2	
-84	1414104-54		BUSHING	1	
			---*---		
-85	1714000-33		HOUSING-SEAT ROLLER	4	
			ATTACHING PARTS		
-86	NAS220-11		SCREW	2	
-87	AN960-8		WASHER	2	
-88	MS21044N08		NUT	2	
			---*---		
-89	NAS561-1-16		PIN	2	
-90	1215073-1	#	HEADREST ASSEMBLY	2	
-91	1215073-10	#	COVER ASSEMBLY	1	
-92	S2275CC103	%*	BELT ASSY-FRONT SEAT BROWN	2	
	S2275BB103	%*	BELT ASSY-FRONT SEAT BLUE	2	
	S2275AA103	%*	BELT ASSY-FRONT SEAT GREEN	2	
	S2275T103	%*	BELT ASSY-FRONT SEAT RED	2	
	S2275DD103	%*	BELT ASSY-FRONT SEAT GOLD	2	
	S22758103	%*	BELT ASSY-FRONT SEAT BLACK	2	
			ATTACHING PARTS		
-93	AN4-5A		BOLT	2	
-94	NAS43HT4-12		SPACER	2	
-95	AN960-416L		WASHER	2	
-96	MS21042L4		NUT	2	
			---*---		
-97	0510205-5		FITTING-SEAT BELT INBD LH & OUTBD RH	2	
	0510205-6		FITTING-SEAT BELT OUTBD LH & INBD RH	2	
			ATTACHING PARTS		
-98	AN3-4A		BOLT	2	
			---*---		

NOTE. #THIS PART MUST HAVE A SECOND DASH NUMBER ADDED TO DENOTE COLOR. REFER TO HOW TO ORDER UPHOLSTERED PARTS-PAGE XII.

NOTE. ¤THIS PART MUST HAVE A SECOND DASH NUMBER ADDED TO DENOTE COLOR. REFER TO HOW TO ORDER INTERIOR PARTS-PAGE XIII.

NOTE. *SEE FIGURE 99 FOR SHOULDER HARNESS INSTL.

NOTE. %WHEN INITIALLY ORDERING SEAT BELT OR SHOULDER HARNESS FOR AIRCRAFT, BOTH SEAT BELT & SHOULDER HARNESS MUST BE REPLACED.

NOTE. **WHEN ORDERING THIS PART ALSO ORDER 0514121-2 HANDLE ASSY & ATTACHING PARTS. REFERENCE FIG 52A.

A---182 SERIAL 18262466 THRU 18263475

Front Seat (Cont)

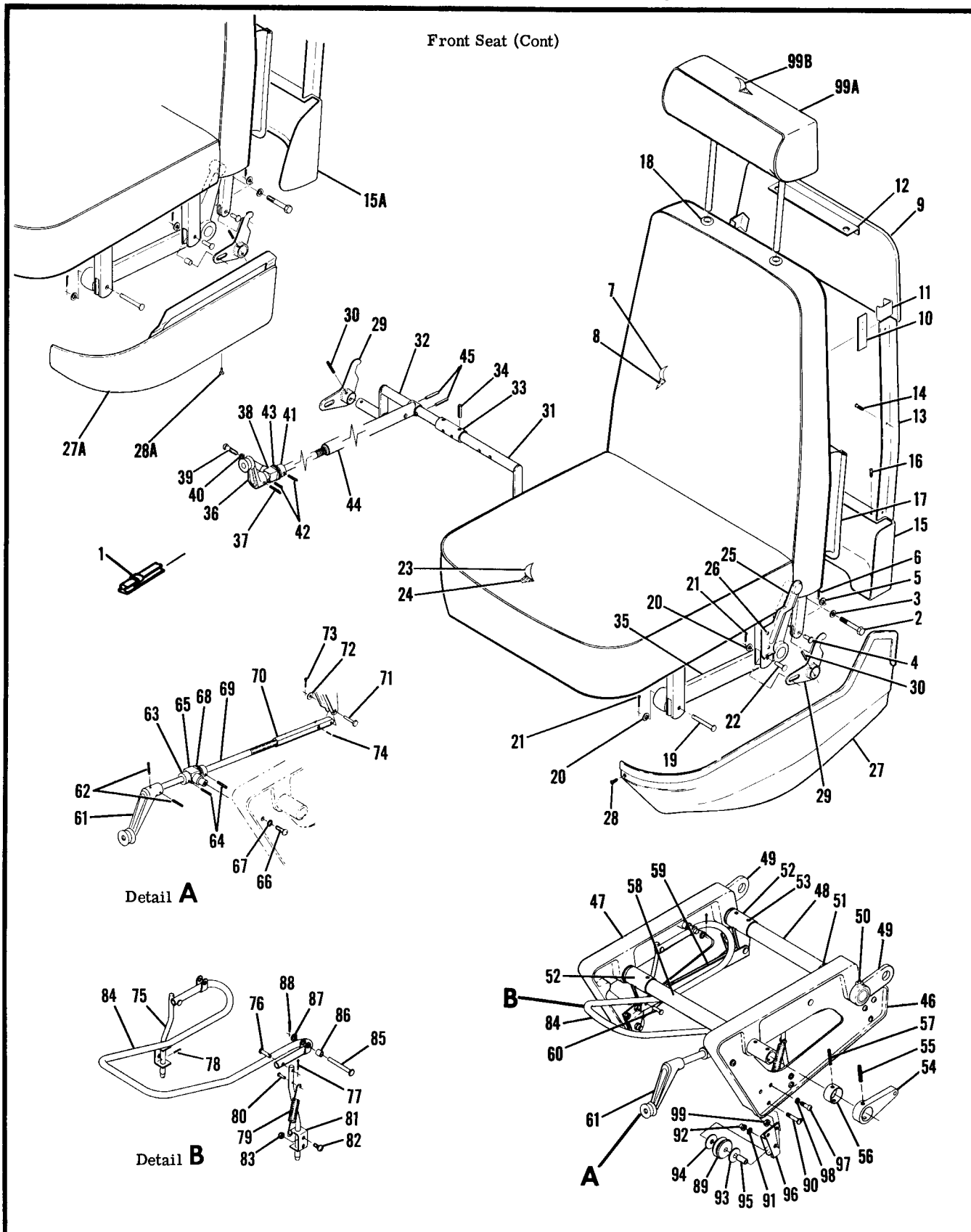

182 SERIAL 18263476 & ON

Figure 52A. Infinite Adjust Front Seat Installation

FIGURE AND INDEX NO.	PART NUMBER		DESCRIPTION 1 2 3 4 5 6 7	UNITS PER ASSY	USABLE ON CODE
52A-			FRONT SEAT INSTALLATION-INFINITE ADJUST	NP	A
	0714020-1	#	FRONT SEAT ASSY-INFINITE ADJUST PILOT	1	B
	0714020-2	#	FRONT SEAT ASSY-INFINITE ADJUST CO-PILOT	1	B
	0714020-13	#	FRONT SEAT ASSY-INFINITE ADJUST PILOT	1	C
	0714020-14	#	FRONT SEAT ASSY-INFINITE ADJUST CO-PILOT	1	C
			ATTACHING PARTS		
- 1	0713074-1		STOP-SEAT	1	
	MS20392-1C21		PIN	1	
	MS24665-151		COTTER PIN	1	
			---*---		
	0714020-3	#	BACK ASSY-UPHOLSTERED SEAT	1	B
	0714020-12	#	BACK ASSY-UPHOLSTERED SEAT	1	C
			ATTACHING PARTS		
- 2	AN3-17A		BOLT	2	
- 3	AN960-10L		WASHER	4	
	0514029-2		SPACER	2	
	MS21044N3		NUT	2	
- 4	MS20392-2C11		PIN	2	
- 5	AN960-10L		WASHER	2	
- 6	MS24665-132		COTTER PIN	2	
			---*---		
- 7	0714020-7	#	COVER ASSY-SEAT BACK	1	B
	0714020-17	#	COVER ASSY-SEAT BACK	1	C
- 8	0714020-10		CUSHION ASSY-SEAT BACK	1	B
	0714020-20		CUSHION ASSY-SEAT BACK	1	C
- 9	0514100-1	#	FORMER ASSY-SEAT BACK	1	
			ATTACHING PARTS		
-10	0514099-3		CLIP-SEAT BACK	2	
			---*---		
-11	0514099-1		BRACKET-SEAT BACK FORMER	2	
-12	0514099-2		BRACKET-SEAT BACK FORMER	1	
-13	0514102-1	#	RETAINER ASSY	2	
			ATTACHING PARTS		
-14	S1021A4-6		SCREW	2	
			---*---		
-15	1214098-1	□	TRIM	1	B
-15A	1714100-1	□	TRIM	1	C
			ATTACHING PARTS		
-16	S1021A4-6		SCREW	3	
			---*---		
-17	1214062-5	#	POCKET ASSY-MAGAZINE	1	
-18	0514110-1		GROMMET	2	
	0714020-4	#	BOTTOM ASSY-UPHOLSTERED SEAT PILOT	1	B
	0714020-5	#	BOTTOM ASSY-UPHOLSTERED SEAT CO-PILOT	1	B
	0714020-15	#	BOTTOM ASSY-UPHOLSTERED SEAT PILOT	1	C
	0714020-16	#	BOTTOM ASSY-UPHOLSTERED SEAT CO-PILOT	1	C
			ATTACHING PARTS		
-19	MS20392-3C49		PIN	2	
-20	AN960-416L		WASHER	4	
-21	MS24665-134		COTTER PIN	4	
-22	MS20392-3C17		PIN	2	
			---*---		
-23	0714020-6	#	COVER ASSY-SEAT BOTTOM	1	B
	0714020-18	#	COVER ASSY-SEAT BOTTOM	1	C
-24	0714020-11		CUSHION ASSY-SEAT BOTTOM	1	B
	0714020-19		CUSHION ASSY-SEAT BOTTOM	1	C
-25	0514101-1		STIFFENER-SEAT TRIM LH	1	B
	0514101-2		STIFFENER-SEAT TRIM RH	1	B
			ATTACHING PARTS		
-26	S1021A4-6		SCREW	2	B
			---*---		
-27	0714010-1	□	TRIM-SEAT BOTTOM LH	1	B
	0714010-2	□	TRIM-SEAT BOTTOM RH	1	B
-27A	1714101-1	#	TRIM ASSY-SEAT BOTTOM LH	1	C
	1714101-2	#	TRIM ASSY-SEAT BOTTOM RH	1	C
			ATTACHING PARTS		
-28	S1021A4-6		SCREW	6	B
-28A	S1021A6		SCREW	10	C
			---*---		

CONTINUED ON NEXT PAGE

FIGURE AND INDEX NO.	PART NUMBER		DESCRIPTION 1 2 3 4 5 6 7	UNITS PER ASSY	USABLE ON CODE
52A-29	0514030-4		BELLCRANK ASSY-SEAT BACK ADJUST	2	
			ATTACHING PARTS		
-30	NAS561P4-12		PIN	2	
			---*---		
-31	1714074-13		CRANK-WELD ASSY-LH	1	
-32	1714074-14		CRANK-WELD ASSY-RH	1	
-33	1714074-6		SPLICE	1	
			ATTACHING PARTS		
-34	NAS561P6-12		PIN	4	
-35	0514060-5		BRACKET-SEAT PIVOT	2	
-36	0514036-1		HANDLE ASSY-SEAT BACK ADJUST	1	B
	0514121-2		HANDLE ASSY-SEAT BACK ADJUST	1	C
			ATTACHING PARTS		
-37	NAS561P4-12		PIN	1	B
	NAS561P4-10		PIN	1	C
			---*---		
-38	0514033-1		BEARING BLOCK	1	
			ATTACHING PARTS		
-39	AN520-10R8		SCREW	1	
-40	AN960-10L		WASHER	1	
			---*---		
-41	1200138-2		COLLAR	2	
			ATTACHING PARTS		
-42	NAS561P4-12		PIN	1	
			---*---		
-43	S2013-2		BEARING	1	
	S2014-2		RACE-BEARING	2	
-44	0514089-1		JACK SCREW ASSY	1	
			ATTACHING PARTS		
-45	NAS561P4-15		PIN	2	
			---*---		
	0514051-2	*	PEDESTAL ASSY-CO-PILOT SEAT	1	
	0514051-1	*	PEDESTAL ASSY-PILOT SEAT	1	
-46	0514035-17		PEDESTAL-LH	1	
-47	0514035-18		PEDESTAL-RH	1	
-48	0514026-2		TORQUE TUBE-REAR	1	
-49	0514034-1		BELLCRANK-REAR TORQUE TUBE	2	
			ATTACHING PARTS		
-50	NAS561P6-28		PIN	1	
			---*---		
-51	0514028-6		BELLCRANK ASSY-REAR TORQUE INBD	1	
			ATTACHING PARTS		
	NAS561P8-18		PIN	2	
			---*---		
-52	0514028-5		BELLCRANK ASSY-REAR TORQUE TUBE OUTBD	1	
			ATTACHING PARTS		
-53	NAS561P8-18		PIN	2	
			---*---		
-54	0700633-5		BELLCRANK-FWD TORQUE TUBE	2	
			ATTACHING PARTS		
-55	NAS561P6-22		PIN	2	
			---*---		
-56	1200136-1		COLLAR	3	
			ATTACHING PARTS		
-57	NAS561P6-18		PIN	1	
			---*---		
-58	0514026-4		TORQUE TUBE-FWD	1	
-59	0514032-1		CHANNEL-TORQUE TUBE INTERCONNECT	1	
			ATTACHING PARTS		
-60	MS20392Z-2C17		PIN	2	
	AN960-10L		WASHER	2	
	MS24665-132		COTTER PIN	2	
			---*---		
-61	1200159-3		HANDLE ASSY-VERTICAL ADJUST	1	B
	0514121-1		HANDLE ASSY-VERTICAL ADJUST	1	C
			ATTACHING PARTS		
-62	NAS561P4-12		PIN	2	B
	NAS561P4-10		PIN	2	C
			---*---		

CONTINUED ON NEXT PAGE

FIGURE AND INDEX NO.	PART NUMBER		DESCRIPTION 1 2 3 4 5 6 7	UNITS PER ASSY	USABLE ON CODE
52A-63	1200138-2		COLLAR	2	
			ATTACHING PARTS		
-64	NAS561P4-12		PIN	1	
			---*---		
-65	0514033-2		BEARING BLOCK	1	
			ATTACHING PARTS		
-66	AN520-10R8		SCREW	1	
-67	AN960-10L		WASHER	1	
			---*---		
-68	S2013-2		BEARING	1	
	S2014-2		RACE-BEARING	2	
-69	0514027-21		SCREW ASSY-VERTICAL ADJUST	1	
-70	1514119-3		NUT-VERTICAL ADJUST	1	
			ATTACHING PARTS		
-71	MS20392-2C37		PIN	1	
-72	AN960-10		WASHER	1	
-73	MS24665-132		COTTER PIN	1	
-74	NAS561P4-8		PIN	1	
			---*---		
-75	1714067-5		PIN-SEAT ADJUST	2	
			ATTACHING PARTS		
-76	MS20392-1C21		PIN	1	
-77	MS24665-132		COTTER PIN	1	
			---*---		
-78	NAS561-1-16		PIN	2	
-79	1414116-1		SPRING LH SIDE ONLY	1	
			ATTACHING PARTS		
-80	MS20392-1C11		PIN	1	
			---*---		
-81	1714061-1		GUIDE-PIN	2	
			ATTACHING PARTS		
-82	AN515-8R6		SCREW	2	
-83	NAS679A08		NUT	2	
			---*---		
-84	0514090-4		HANDLE-SEAT ADJUST	1	
			ATTACHING PARTS		
-85	MS20392-2C55		PIN	2	
-86	NAS43DD3-18		SPACER	2	
-87	AN960-10L		WASHER	2	
-88	MS24665-132		COTTER PIN	2	
			---*---		
-89	S1704-1		ROLLER-SEAT	4	
			ATTACHING PARTS		
-90	AN23-20A		BOLT	1	
-91	AN960-10L		WASHER	1	
-92	S1914-8		NUT	1	
-93	1714000-22		WASHER	1	
-94	1714000-41		WASHER	1	
-95	1414104-54		BUSHING	1	
			---*---		
-96	1714000-33		HOUSING-SEAT ROLLER	4	
			ATTACHING PARTS		
-97	NAS220-11		SCREW	2	
-98	AN960-8		WASHER	2	
-99	NAS679A08		NUT	2	
			---*---		
-99A	1215073-1	#	HEADREST ASSY	2	
-99B	1215073-10	#	COVER ASSY	2	
	SEE FIG 99		SEAT BELT & SHOULDER HARNESS INSTALLATION	2	

NOTE. #THIS PART MUST HAVE A SECOND DASH NUMBER ADDED TO DENOTE COLOR. REFER TO HOW TO ORDER UPHOLSTERED PARTS-PAGE VI.

NOTE. ¤THIS PART MUST HAVE A SECOND DASH NUMBER ADDED TO DENOTE COLOR. REFER TO HOW TO ORDER INTERIOR PARTS-PAGE VII.

NOTE. *WHEN ORDERING THIS PART FOR AIRPLANES PRIOR TO SERIAL 18264296 ALSO ORDER 0514121-2 HANDLE ASSY & ATTACHING PARTS.

A---182 SERIAL 18263476 & ON
B---182 SERIAL 18263476 THRU 18264295
C---182 SERIAL 18264296 & ON

This page intentionally left blank.

FIGURE AND INDEX NO.	PART NUMBER		DESCRIPTION 1 2 3 4 5 6 7	UNITS PER ASSY	USABLE ON CODE
53 -	0714013-1		SEAT ASSY-REAR	1	A
	0714021-1		SEAT ASSY-REAR	1	B
	0714021-17		SEAT ASSY-REAR	1	C
	0714013-4	#	BOTTOM ASSY-REAR SEAT	1	A
	0714021-2	#	BOTTOM ASSY-REAR SEAT	1	B
	0714021-18	#	BOTTOM ASSY-REAR SEAT	1	C
			ATTACHING PARTS		
- 1	AN4-5A		BOLT	2	
- 2	AN960-416L		WASHER	2	
- 3	MS21042L4		NUT	2	
- 4	AN3-11A		BOLT	1	
- 5	AN960-10L		WASHER	1	
- 6	AN4-5A		BOLT AFT SIDES & CENTER ATTACH	4	
- 7	S1450-4-10-064		WASHER AFT SIDES & CENTER ATTACH	4	
			---*---		
- 8	0714013-12	#	COVER ASSY-BOTTOM LH	1	A
	0714021-8	#	COVER ASSY-BOTTOM LH	1	B
	0714021-23	#	COVER ASSY-BOTTOM LH	1	C
	0714013-9	#	COVER ASSY-BOTTOM RH	1	A
	0714021-10	#	COVER ASSY-BOTTOM RH	1	B
	0714021-24	#	COVER ASSY-BOTTOM RH	1	C
- 9	0700678-33		CUSHION-SEAT BOTTOM LH	1	A
	0714021-11		CUSHION-SEAT BOTTOM LH	1	B
	0714021-25		CUSHION-SEAT BOTTOM LH	1	C
	0700678-34		CUSHION-SEAT BOTTOM RH	1	A
	0714021-12		CUSHION-SEAT BOTTOM RH	1	B
	0714021-26		CUSHION-SEAT BOTTOM RH	1	C
-10	0715017-1		RETAINER	6	A
			ATTACHING PARTS		
	S1021Z4-6		SCREW	1	A
			---*---		
-11	1414211-24		TUBE-CONTROL	2	
-12	0710312-2		HANDLE	2	
			ATTACHING PARTS		
-13	NAS561C3-10		PIN	1	
			---*---		
-14	1414231-2		PAWL	4	
			ATTACHING PARTS		
-15	NAS561C3-10		PIN	1	
			---*---		
-16	AN960-416		WASHER	4	
-17	1414107-1		SPRING-LH	1	
	1414107-2		SPRING-RH	1	
-18	AN3-10A		BOLT	2	
-19	AN960-10L		WASHER	4	
-20	MS21044N3		NUT	2	
-21	AN507-832R14		SCREW	2	
	NAS679A08		NUT	2	
-22	AN23-15A		BOLT	2	
-23	MS20392-2C71		PIN	1	
-24	MS24665-132		COTTER PIN	1	
	0714013-2	#	BACK ASSY-REAR SEAT RH	1	A
	0714021-4	#	BACK ASSY-REAR SEAT RH	1	B
	0714021-20	#	BACK ASSY-REAR SEAT RH	1	C
	0714013-3	#	BACK ASSY-REAR SEAT LH	1	A
	0714021-3	#	BACK ASSY-REAR SEAT LH	1	B
	0714021-19	#	BACK ASSY-REAR SEAT LH	1	C
			ATTACHING PARTS		
-25	AN3-24A		BOLT	1	
-26	1414211-22		BUSHING	1	
-27	0711668-1		BUSHING	4	
-28	AN960-10L		WASHER	6	
-29	0711667-1		SPRING	4	
-30	MS21044N3		NUT	3	
-31	AN3-10A		BOLT	2	
-32	1414104-4		BUSHING	2	
			---*---		
-33	0714013-5	#	COVER ASSY-SEAT BACK LH	1	A
	0714021-5	#	COVER ASSY-SEAT BACK LH	1	B
	0714021-21	#	COVER ASSY-SEAT BACK LH	1	C

CONTINUED ON NEXT PAGE

Rear Seat (Cont)

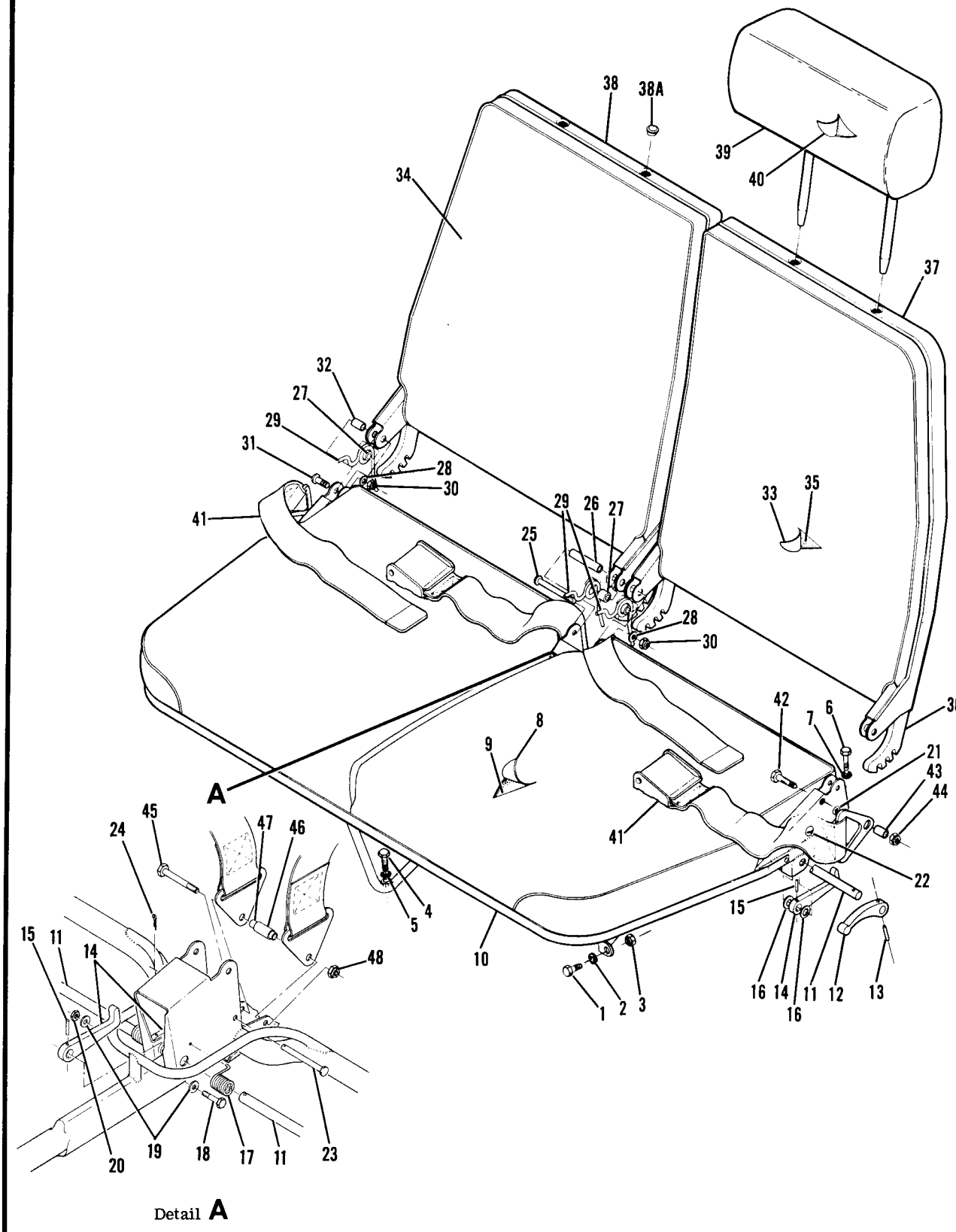

Detail **A**

Figure 53. Rear Seat Assembly

FIGURE AND INDEX NO.	PART NUMBER		DESCRIPTION 1 2 3 4 5 6 7	UNITS PER ASSY	USABLE ON CODE
53 -34	0714013-6	#	COVER ASSY-SEAT BACK RH	1	A
	0714021-6	#	COVER ASSY-SEAT BACK RH	1	B
	0714021-22	#	COVER ASSY-SEAT BACK RH	1	C
-35	0714013-7		CUSHION ASSY-SEAT BACK LH	1	A
	0714021-13		CUSHION ASSY-SEAT BACK LH	1	B
	0714021-27		CUSHION ASSY-SEAT BACK LH	1	C
	0714013-8		CUSHION ASSY-SEAT BACK RH	1	A
	0714021-14		CUSHION ASSY-SEAT BACK RH	1	B
	0714021-28		CUSHION ASSY-SEAT BACK RH	1	C
-36	1414230-2		CAM-SEAT BACK RECLINE	2	
-37	0715016-1	¤	TRIM ASSY-SEAT BACK LH	1	A
	0714023-1	¤	TRIM ASSY-SEAT BACK LH	1	D
-38	0715016-2	¤	TRIM ASSY-SEAT BACK RH	1	A
	0714023-2	¤	TRIM ASSY-SEAT BACK RH	1	D
			ATTACHING PARTS		
	S1021ZA4-6		SCREW	5	
			---*---		
-38A	0514110-1		GROMMET-HEADREST	2	B
-39	1215073-1	#	HEADREST ASSY	2	
-40	1215073-10	#	COVER-HEADREST	1	
-41	S1746CC1		BELT ASSY-SEAT BROWN WITHOUT SHOULDER HARNESS	1	E
	S1746BB1		BELT ASSY-SEAT BLUE WITHOUT SHOULDER HARNESS	1	E
	S1746AA1		BELT ASSY-SEAT GREEN WITHOUT SHOULDER HARNESS	1	E
	S1746T1		BELT ASSY-SEAT RED WITHOUT SHOULDER HARNESS	1	E
	S1746DD1		BELT ASSY-SEAT GOLD WITHOUT SHOULDER HARNESS	1	E
	S1746B1		BELT ASSY-SEAT BLACK WITHOUT SHOULDER HARNESS	1	F
	S2275CC107	*	BELT ASSY-SEAT BROWN WITH SHOULDER HARNESS	1	E
	S2275BB107	*	BELT ASSY-SEAT BLUE WITH SHOULDER HARNESS	1	E
	S2275AA107	*	BELT ASSY-SEAT GREEN WITH SHOULDER HARNESS	1	E
	S2275T107	*	BELT ASSY-SEAT RED WITH SHOULDER HARNESS	1	E
	S2275DD107	*	BELT ASSY-SEAT GOLD WITH SHOULDER HARNESS	1	E
	S2275B107	*	BELT ASSY-SEAT BLACK WITH SHOULDER HARNESS	1	E
	S1746CC1		BELT ASSY-SEAT CHESTNUT BROWN WITHOUT SHOULDER HARNESS	1	C
	S1746FF1		BELT ASSY-SEAT SAPPHIRE BLUE WITHOUT SHOULDER HARNESS	1	C
	S1746GG1		BELT ASSY-SEAT ORO GREEN WITHOUT SHOULDER HARNESS	1	C
	S1746EE1		BELT ASSY-SEAT RUBY RED WITHOUT SHOULDER HARNESS	1	C
	S1746HH1		BELT ASSY-SEAT TOPAZ GOLD WITHOUT SHOULDER HARNESS	1	C
	S1746B1		BELT ASSY-SEAT BLACK WITHOUT SHOULDER HARNESS	1	C
	S2275CC107		BELT ASSY-SEAT CHESTNUT BROWN WITH SHOULDER HARNESS	1	C
	S2275FF107		BELT ASSY-SEAT SAPPHIRE BLUE WITH SHOULDER HARNESS	1	C
	S2275GG107		BELT ASSY-SEAT ORO GREEN WITH SHOULDER HARNESS	1	C
	S2275GG107		BELT ASSY-SEAT RUBY RED WITH SHOULDER HARNESS	1	C
	S2275HH107		BELT ASSY-SEAT TOPAZ GOLD WITH SHOULDER HARNESS	1	C
	S2275B107		BELT ASSY-SEAT BLACK WITH SHOULDER HARNESS	1	C
			ATTACHING PARTS		
-42	AN4-12A		BOLT ATTACH OUTBD BELT ENDS	2	
	NAS43HT4-32		SPACER INSTALLED IN FRAME RECESS OUTBD	2	
-43	NAS43HT4-12		SPACER THROUGH BELT STIRRUP	2	
	AN960-416L		WASHER	2	
-44	MS21042L4		NUT INSTALLED ON OUTBD ATTACH POINT	2	
-45	AN4-20A		BOLT	1	
-46	NAS43HT4-58		SPACER	1	
-47	NAS43HT4-80		SPACER	1	
-48	MS21042L4		NUT	1	
			---*---		
	SEE FIG 99		SHOULDER HARNESS INSTALLATION	AR	

NOTE. #THIS PART MUST HAVE A SECOND DASH NUMBER ADDED TO DENOTE COLOR. REFER TO HOW TO ORDER UPHOLSTERED PARTS-PAGE XII.

NOTE. ¤THIS PART MUST HAVE A SECOND DASH NUMBER ADDED TO DENOTE COLOR. REFER TO HOW TO ORDER INTERIOR PARTS-PAGE XIII.

NOTE. *WHEN INITIALLY ORDERING SEAT BELT OR SHOULDER HARNESS FOR AIRCRAFT PRIOR TO SERIAL 18264256, BOTH SEAT BELT & SHOULDER HARNESS MUST BE REPLACED

A---182 SERIAL 18262466 THRU 18263475
B---182 SERIAL 18263476 THRU 18264295
C---182 SERIAL 18264296 & ON
D---182 SERIAL 18263476 & ON
E---182 SERIAL 18262466 THRU 18264295

Seat (Cont)

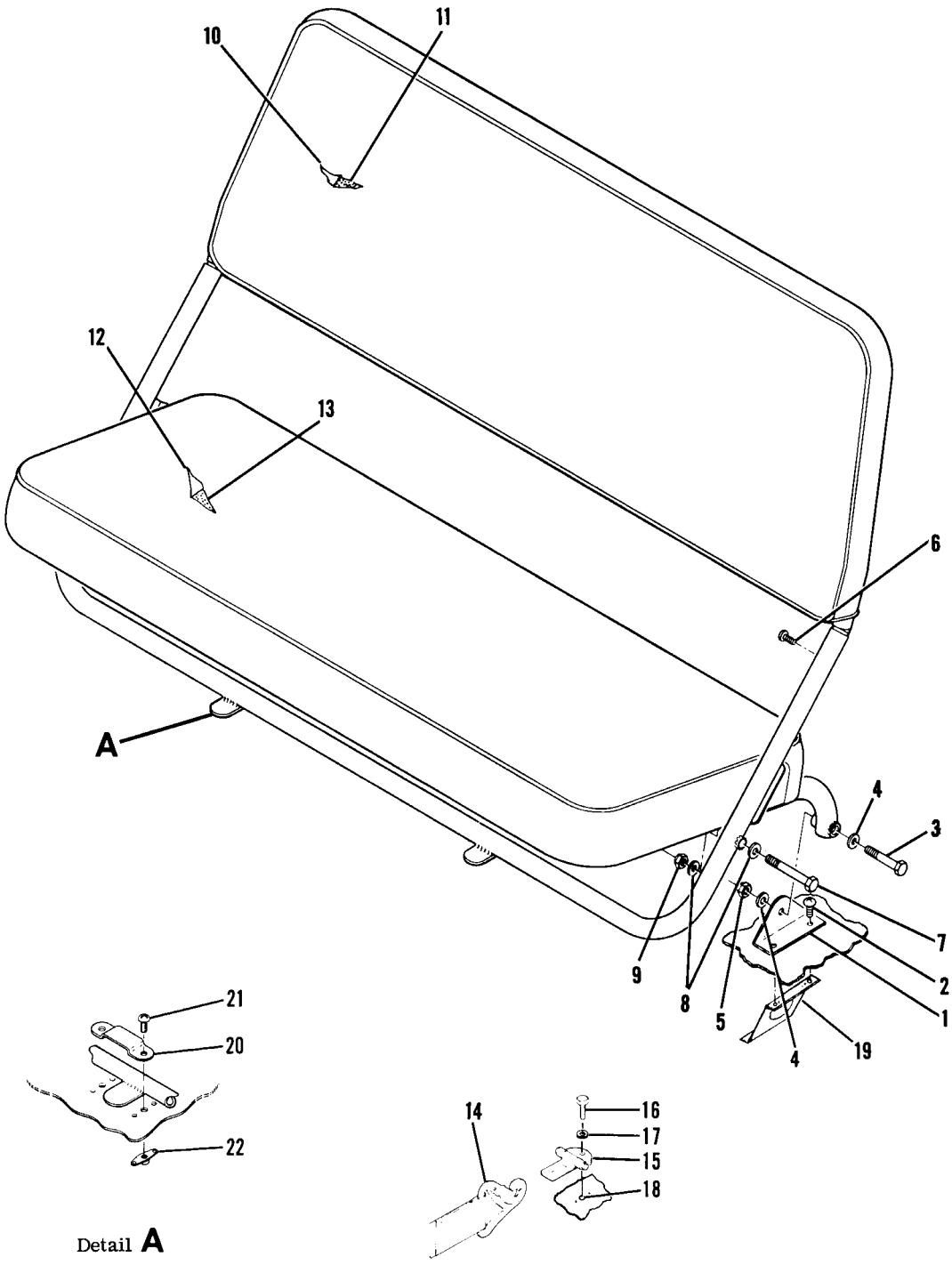

Figure 54. Auxiliary Seat Installation

FIGURE AND INDEX NO.	PART NUMBER		DESCRIPTION 1 2 3 4 5 6 7	UNITS PER ASSY	USABLE ON CODE
54 -			AUXILIARY SEAT INSTALLATION	NP	A
	0714005-1		SEAT ASSY-AUXILIARY	1	B
	0714022-1		SEAT ASSY-AUXILIARY	1	C
	0714022-4		SEAT ASSY-AUXILIARY	1	D
			ATTACHING PARTS		
- 1	0514042-1		BRACKET-SEAT MOUNT	2	
- 2	AN515-8R8		SCREW	4	
- 3	AN4-13A		BOLT	2	
- 4	AN916-416		WASHER	4	
- 5	MS21042L4		NUT	2	
			---*---		
- 6	S1021Z8-8C		SCREW	2	
- 7	AN4-17A		BOLT	2	
- 8	AN960-416		WASHER	4	
- 9	MS21042L4		NUT	2	
-10	0714005-3	#	COVER ASSY-SEAT BACK	1	B
	0714022-3	#	COVER ASSY-SEAT BACK	1	C
	0714022-6	#	COVER ASSY-SEAT BACK	1	D
-11	0515002-9		CUSHION-SEAT BACK	1	
-12	0714005-4	#	COVER ASSY-SEAT BOTTOM	1	B
	0714022-2	#	COVER ASSY-SEAT BOTTOM	1	C
	0714022-5	#	COVER ASSY-SEAT BOTTOM	1	D
-13	0515002-10		CUSHION-SEAT BOTTOM	1	
-14	S1746CC5		SAFETY BELT ASSY BROWN	1	E
	S1746BB5		SAFETY BELT ASSY BLUE	1	E
	S1746AA5		SAFETY BELT ASSY GREEN	1	E
	S1746T5		SAFETY BELT ASSY RED	1	E
	S1746DD5		SAFETY BELT ASSY GOLD	1	E
	S1746B5		SAFETY BELT ASSY BLACK	1	E
	S1746CC5		SEAT BELT ASSY CHESTNUT BROWN	1	D
	S1746FF5		SEAT BELT ASSY SAPPHIRE BLUE	1	D
	S1746GG5		SEAT BELT ASSY ORO GREEN	1	D
	S1746EE5		SEAT BELT ASSY RUBY RED	1	D
	S1746HH5		SEAT BELT ASSY TOPAZ GOLD	1	D
	S1746B5		SEAT BELT ASSY BLACK	1	D
			ATTACHING PARTS		
-15	0711083-1		LATCH ASSY	2	
-16	AN4-6A		BOLT	2	
-17	AN960-416		WASHER	2	
-18	MS21042L4		NUT	2	
			---*---		
-19	0711775-1		REINFORCEMENT ASSY	2	
	NAS679A08K		NUTPLATE	2	
-20	0715026-1		RETAINER	2	
			ATTACHING PARTS		
-21	AN515-8R8		SCREW	2	
-22	NAS686A08		NUT	2	
			---*---		

NOTE. #THIS PART MUST HAVE A SECOND DASH NUMBER ADDED TO DENOTE COLOR. REFER TO HOW TO ORDER UPHOLSTERED PARTS-PAGE XII.

A---182 SERIAL 18262466 & ON
B---182 SERIAL 18262466 THRU 18263475
C---182 SERIAL 18263476 THRU 18264295
D---182 SERIAL 18264296 & ON
E---182 SERIAL 18262466 THRU 18264295

Instruments

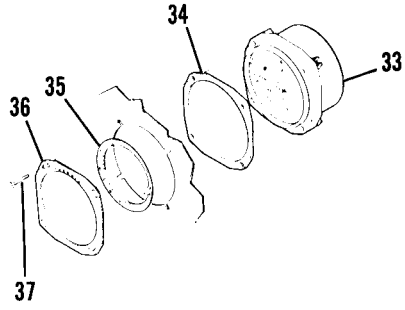

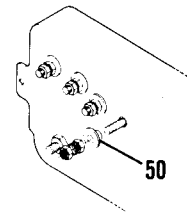

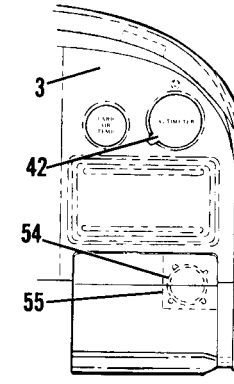

DUAL ALTIMETER INSTALLATION

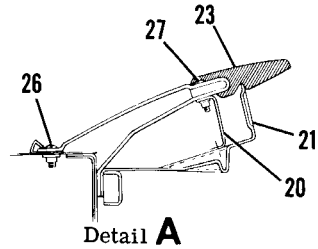

Detail A

18262466 THRU 18263475

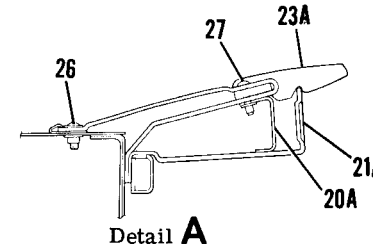

Detail A

18263476 & ON

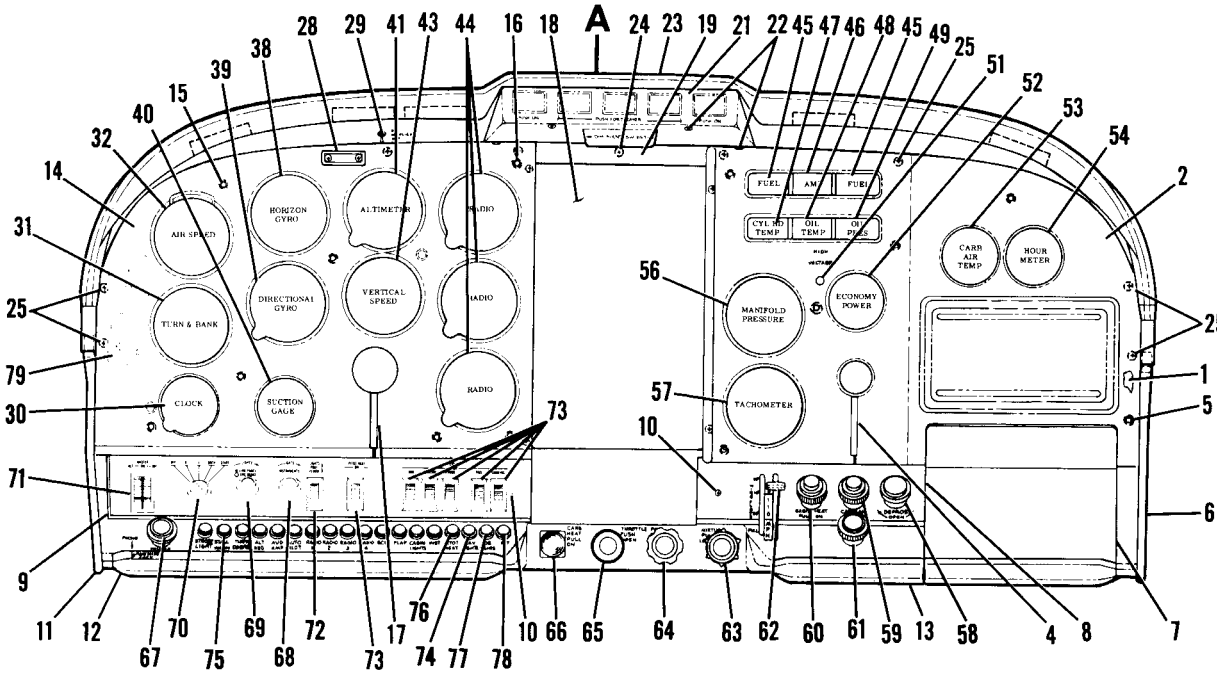

182 SERIAL 18262466 THRU 18264295

Figure 55. Instrument Panel Equipment Installation

FIGURE AND INDEX NO.	PART NUMBER		DESCRIPTION 1 2 3 4 5 6 7	UNITS PER ASSY	USABLE ON CODE
55 -			INSTRUMENT PANEL EQUIPMENT INSTALLATION	NP	A
- 1	SEE FIG 55B		INSTRUMENT PANEL ASSY-STATIONARY	1	
	SEE FIG 55B		PANEL-SHOCK MOUNTED	1	
- 2	0713484-1	□	COVER ASSY-UPPER RH PANEL	1	
- 3	0713484-5	□	COVER ASSY-UPPER RH PANEL DUAL ALTIMETER INSTL ONLY	1	
- 4	1213163-2		LAP SEAL	1	
- 5	1513839-3		GUIDE	7	
- 6	0713330-3		COVER-INSTRUMENT PANEL LWR RH	1	D
	075180-3		COVER-INSTRUMENT PANEL LWR RH	1	E
			ATTACHING PARTS		
	S1021Z6-6		SCREW	3	
	NAS446-2-1		NUT	3	
			---*---		
- 7	SEE FIG 57		MAP COMPARTMENT INSTALLATION	1	
- 8	1213363-6		PANEL ASSY-LOWER RH ELECTROLUMINESCENT	1	
- 9	0713337-1		PANEL ASSY-LOWER LH SWITCH ELECTROLUMINESCENT	1	
			ATTACHING PARTS		
-10	S1022Z4-8		SCREW	1	
			---*---		
	SEE FIG 93		POWER SUPPLY & DIMMING-ELECTROLUMINESCENT	1	
-11	0713525-15		COVER ASSY-INSTRUMENT PANEL LOWER	1	D
	075180-5		COVER ASSY-INSTRUMENT PANEL LOWER	1	E
			ATTACHING PARTS		
	S1021A6-6		SCREW	8	
			---*---		
-12	0713955-1		KNEE BUMPER-LH	1	
-13	1213317-7		KNEE BUMPER-INBD RH	1	
-14	0713483-5	□	COVER ASSY-INSTRUMENT PANEL LH	1	
-15	1513839-3		GUIDE	5	
-16	1513839-5		GUIDE	2	
-17	1213335-1		LAP SEAL	1	
-18	1213381-1	□	COVER ASSY-RADIO CUTOUT	1	
			ATTACHING PARTS		
	S1021A4-6		SCREW	4	
			---*---		
-19	1213377-1	□	COVER-CENTER PANEL	1	
			ATTACHING PARTS		
	S1021A4-6		SCREW	2	
			---*---		
-20	1213365-1		BRACKET ASSY-SWITCH MOUNTING	1	B
-20A	1213398-1		BRACKET ASSY-SWITCH MOUNTING	1	C
	NAS697A08		NUTPLATE	2	
-21	1213366-1	□	COVER-SWITCH MOUNTING BRACKET	1	B
-21A	1213399-1	□	COVER-SWITCH MOUNTING BRACKET	1	C
			ATTACHING PARTS		
-22	S1021Z6-8B		SCREW	4	B
	S1021Z6-6B		SCREW	4	C
			---*---		
-23	0713325-1		GLARE SHIELD ASSY	1	B
-23A	0713169-1		GLARE SHIELD ASSY	1	C
			ATTACHING PARTS		
-24	AN525-832R10		SCREW	1	
-25	AN525-832R8		SCREW	6	
-26	AN515B8R8		SCREW	6	
	S1450-3A8-032		WASHER	6	
-27	AN515B8R12		SCREW	2	
			---*---		
	SEE FIG 94		LIGHT INSTALLATION-GLARE SHIELD	1	
-28	1213004-2		RETAINER-AIRCRAFT IDENTIFICATION NUMBER	1	
			ATTACHING PARTS		
	S1022Z6-8		SCREW	2	
	NAS446-2-1		NUT	2	
			---*---		
	SEE FIG 2		PLACARD-IDENTIFICATION NUMBER	1	
-29	S1695-2		SWITCH-MAP LIGHT	1	
-30	C664508-0101		CLOCK-ELECTRIC	1	
			ATTACHING PARTS		
	AN515B6R12		SCREW	3	
			---*---		

CONTINUED ON NEXT PAGE

FIGURE AND INDEX NO.	PART NUMBER	1 2 3 4 5 6 7 DESCRIPTION	UNITS PER ASSY	USABLE ON CODE
55 -31	S1413-1	INDICATOR-TURN & BANK WEU S1413-2	1	
	S1413-2	INDICATOR-TURN & BANK	1	
	C661003-0504	INDICATOR-TURN COORDINATOR	1	
		ATTACHING PARTS		
	AN515R6R12	SCREW	4	
	AN936B6B	WASHER	4	
		---*---		
-32	C661060-0201	INDICATOR-AIRSPEED	1	
		ATTACHING PARTS		
	AN515B6R12	SCREW	4	
		---*---		
		TRUE AIRSPEED INDICATOR INSTALLATION	NP	
-33	C661061-0201	INDICATOR-AIRSPEED	1	
-34	0700162-6	SPACER .071 THICKNESS	AR	
	0700162-4	SPACER .063 THICKNESS	AR	
	0700162-3	SPACER .051 THICKNESS	AR	
	0700162-7	SPACER .040 THICKNESS	AR	
-35	0700189-9	RING ASSY TRUE AIRSPEED	1	
-36	0700162-1	RETAINER ASSY TRUE AIRSPEED	1	
		ATTACHING PARTS		
-37	AN515B6R16	SCREW	4	
		---*---		
-38	C661076-0102 *	GYRO-HORIZON	1	
	C661076-0101 *	GYRO-HORIZON ALT	1	
	C661076-0103 *	GYRO-HORIZON ALT	1	
		ATTACHING PARTS		
	AN515-6R6	SCREW	3	
		---*---		
-39	C661075-0101 **	GYRO-DIRECTIONAL	1	
	C661075-0103 **	GYRO-DIRECTIONAL ALT	1	
	C661075-0104 **	GYRO-DIRECTIONAL ALT	1	
	C661075-0105 **	GYRO-DIRECTIONAL WITH HEADING REFERENCE	1	
		ATTACHING PARTS		
	AN515-6R6	SCREW	3	
		---*---		
	SEE FIG 91	GYRO-DIRECTIONAL NAV-O-MATIC	1	
-40	C668540-0101	GAGE-SUCTION	1	
		ATTACHING PARTS		
	AN515B6R12	SCREW	4	
		---*---		
-41	C661012-0101	ALTIMETER 18,000 FT 182 ONLY	1	
	C661071-0101	ALTIMETER 20,000 FT FT & INCHES SKYLANE ONLY	1	
-42	C661071-0102 ***	ALTIMETER 20,000 FT FT & MILLIBARS SKYLANE ONLY	1	
		ATTACHING PARTS		
	AN515B6R12	SCREW	4	
		---*---		
-43	C661080-0101	INDICATOR-VERTICAL SPEED	1	
		ATTACHING PARTS		
	AN515B6R12	SCREW	3	
		---*---		
-44		RADIO INSTALLATION SEE ELECTRONIC MANUAL	NP	
	C669502-0201	INSTRUMENT CLUSTER-LIGHTED USED WITH O-470-R ENGINE ONLY	1	B
	C669502-0202	INSTRUMENT CLUSTER-LIGHTED USED WITH O-470-S ENGINE ONLY	1	C
		ATTACHING PARTS		
	NAS43DD3-64	SPACER	2	
	AN507B832R24	SCREW	2	
	AN340B8	NUT	2	
		---*---		
-45	441344	GAGE-FUEL SW	2	
-46	440437	AMMETER SW	1	
-47	G442702	GAGE-CYLINDER HEAD TEMP SW	1	
-48	442785	GAGE-OIL TEMP SW USED WITH O-470-R ENGINE ONLY	1	B
	G442786-63	GAGE-OIL TEMP SW USED WITH O-470-S ENGINE ONLY	1	C
-49	G444627	GAGE-OIL PRESSURE SW	1	
-50	401627	WASHER-INSULATOR SW	1	
	S1372-1	SENDING UNIT-CYLINDER HEAD TEMP	1	
	110691	WIRE-CYLINDER HEAD TEMP GAGE TO SENDING UNIT 106.00 IN LG BKI	AR	
	811542	POTENTIOMETER SW	1	
	S1894-3	BULB-RED INSTRUMENT CLUSTER	4	
	S1894-1	BULB-CW GE USED WITH POST LIGHTING	4	
	S1941-1	FILTER USED WITH POST LIGHTING	4	

CONTINUED ON NEXT PAGE

FIGURE AND INDEX NO.	PART NUMBER	DESCRIPTION 1 2 3 4 5 6 7	UNITS PER ASSY	USABLE ON CODE
55 -51	S2135-1	LIGHT ASSY-HIGH VOLTAGE	1	
-52	C668501-0211	INDICATOR-ECONOMY POWER	1	
		ATTACHING PARTS		
	AN507B632R12	SCREW	4	
	MS20365B632C	NUT	4	
		---*---		
-53	S1311-3	GAGE-CARBURETOR AIR TEMP	1	
		ATTACHING PARTS		
	AN507B632R12	SCREW	4	
	MS20365B632C	NUT	4	
	C7000-632-67	NUT TIN	4	
		---*---		
-54	C664501-0103	GAGE-HOURMETER	1	
		ATTACHING PARTS		
	AN507B632R6	SCREW	4	
	NAS679A06	NUT	4	
-55	1200749-1	BRACKET-HOURMETER MOUNTING USED WITH DUAL ALTIMETER INSTL	1	
		---*---		
-56	C662035-0101	GAGE-MANIFOLD PRESSURE	1	
		ATTACHING PARTS		
	AN515B6R12	SCREW	4	
		---*---		
	0700099-84	LINE ASSY-MANIFOLD PRESSURE	1	
	AN818-2D	NIPPLE	1	
-57	C668020-0104	TACHOMETER	1	
		ATTACHING PARTS		
	AN515B6R12	SCREW	4	
		---*---		
	S1605-2	SHAFT-TACHOMETER	1	
-58	S1268-14	CONTROL ASSY-DEFROST	1	
-59	S1241-36	CONTROL ASSY-CABIN AIR	1	
-60	S1241-37	CONTROL ASSY-CABIN HEAT	1	
-61	0513052-17	LIGHTER ASSY-CIGAR	1	
	L4858-1	PLUG-HEATING CUE	1	
	S1982-1	KNOB ASSY-LIGHTER	1	
	60232-1	CIRCUIT BREAKER-LIGHTER ASSY CUE	1	
-62	SEE FIG 84	FLAP CONTROL DETAIL INSTL	1	
-63	S1234-5	CONTROL ASSY-MIXTURE	1	
-64	C299506-0102	CONTROL ASSY-PROPELLER	1	
	1213646-1	WASHER-PROPELLER CONTROL	1	
	NAS43DD12-64	SPACER-PROPELLER CONTROL	1	
-65	C299505-0205	CONTROL ASSY-THROTTLE	1	
-66	S1230-10	CONTROL ASSY-CARBURETOR HEAT	1	
-67	C291502-0103	PRIMER ASSY-ENGINE	1	
	S1974-1	KNOB ASSY-PRIMER	1	
-68	S1980-1	KNOB ASSY-INSTRUMENT DIMMING LIGHT	1	
	S1904-3	RESISTOR-VARIABLE	1	
	270HM1/2W10%	RESISTOR	1	
-69	S1995-4	KNOB ASSY-RADIO LIGHTS	1	
		ATTACHING PARTS		
	AN565B2H3	SCREW	1	
	AN565B2-3	SCREW ALT	1	
		---*---		
	S2091-1	RESISTOR-VARIABLE TANDEM	1	
	270HM1/2W%	RESISTOR	1	
-70	C292501-0104	KIT-IGNITION SWITCH	1	
-71	S1994-1-1	SWITCH-MASTER	1	
	0770719-2	DIODE ASSY-MASTER SWITCH	1	
-72	S2160-2	SWITCH-CONSOLE LIGHTS	1	
-73	S2160-1	SWITCH-INSTRUMENT PANEL	6	
	S2161-1	COVER ASSY-SWITCH CUTOUT USE WHEN OPTIONAL SWITCHES ARE NOT INSTALLED	4	

CONTINUED ON NEXT PAGE

FIGURE AND INDEX NO.	PART NUMBER	1 2 3 4 5 6 7 DESCRIPTION	UNITS PER ASSY	USABLE ON CODE
55 -74	S1360-10L	CIRCUIT BREAKER 10 AMP	5	
-75	S1360-5L	CIRCUIT BREAKER 5 AMP	3	
-76	S1360-15L	CIRCUIT BREAKER 15 AMP	2	
-77	S1360-20L	CIRCUIT BREAKER 20 AMP	1	
-78	S1360-60	CIRCUIT BREAKER 60 AMP	1	
	1213716-1	PLUG BUTTON ASSY USED WHEN CIRCUIT BREAKER NOT INSTALLED	AR	D
	075180-6	PLUG BUTTON ASSY USED WHEN CIRCUIT BREAKER NOT INSTALLED	AR	E
	0713854-1	BUS BAR-CENTER	1	
	0713854-2	BUS BAR-RH	1	
	0713854-4	BUS BAR-LH	1	
-79	SEE FIG 2	PLACARD-MARKER BEACON	1	

NOTE. □ THIS PART MUST HAVE A SECOND DASH NUMBER ADDED TO DENOTE COLOR. REFER TO HOW TO ORDER INTERIOR PARTS-PAGE VII.

NOTE. * THESE GYROS ARE PHYSICALLY & FUNCTIONALLY INTERCHANGEABLE.

NOTE. ** THESE GYROS ARE PHYSICALLY & FUNCTIONALLY INTERCHANGEABLE.

NOTE. *** USED AS SECOND ALTIMETER FOR FOR DUAL ALTIMETER INSTALLATION.

A---182 SERIAL 18262446 THRU 18264295
B---182 SERIAL 18262446 THRU 18263475
C---182 SERIAL 18263476 & ON
D---182 SERIAL 18262446 THRU 18262607
18263476 THRU 18264295
E---182 SERIAL 18262608 THRU 18263475

FIGURE AND INDEX NO.	PART NUMBER		DESCRIPTION 1 2 3 4 5 6 7	UNITS PER ASSY	USABLE ON CODE
55A-			INSTRUMENT PANEL EQUIPMENT INSTALLATION	NP	A
	SEE FIG 55B		INSTRUMENT PANEL ASSY-STATIONARY	1	
	SEE FIG 55B		PANEL-SHOCK MOUNTED	1	
- 1	0713484-9	□	COVER ASSY-UPPER RH PANEL	1	
- 2	0713484-11	□	COVER ASSY-UPPER RH PANEL DUAL ALTIMETER INSTL ONLY	1	
- 3	1213163-2		LAP SEAL	1	
- 4	1513839-3		GUIDE	7	
- 5	1213327-7		FASTENER	2	
- 6	1213327-10		FASTENER	5	
- 7	0713330-3		COVER-INSTRUMENT PANEL LWR RH	1	
			ATTACHING PARTS		
	S1021Z6-6		SCREW	3	
	NAS446-2-1		NUT	3	
			---*---		
- 8	SEE FIG 57		MAP COMPARTMENT INSTALLATION	1	
- 9	1213363-11		PANEL ASSY-LOWER RH ELECTROLUMINESCENT	1	
-10	0713337-1		PANEL ASSY-LOWER LH SWITCH ELECTROLUMINESCENT	1	
			ATTACHING PARTS		
-11	S1022Z4-8		SCREW	1	
			---*---		
-12	1213757-1		PANEL-MARKER BEACON ELECTROLUMINESCENT	1	
	SEE FIG 93		POWER SUPPLY & DIMMING-ELECTROLUMINESCENT	1	
-13	0713525-19		COVER ASSY-INSTRUMENT PANEL LOWER	1	
			ATTACHING PARTS		
	S1021A6-6		SCREW	8	
			---*---		
-14	0713955-1		KNEE BUMPER-LH	1	
-15	1213317-7		KNEE BUMPER-INBD RH	1	
-16	0713488-1	□	COVER ASSY-UPPER LH	1	
-17	1513839-3		GUIDE	5	
-18	1513839-5		GUIDE	2	
-19	1213337-1		FASTENER	2	
-20	1213337-10		FASTENER	5	
-21	1213335-1		LAP SEAL	1	
-22	1213756-1	□	COVER ASSY-RADIO STACK	1	
	1213327-8		FASTENER	10	
-23	0713993-1		GLARESHIELD ASSY	1	
			ATTACHING PARTS		
-24	AN525-832R8		SCREW	8	
-25	AN515B8R8		SCREW	6	
	S1450-3A8-032		WASHER	6	
			---*---		
-26	0713993-5		TRIM-GLARESHIELD	1	
	SEE FIG 94		LIGHT INSTALLATION-GLARESHIELD	1	
-27	1213004-2		RETAINER-AIRCRAFT IDENTIFICATION	1	
			ATTACHING PARTS		
-28	S1022Z6-8		SCREW	2	
	NAS446-2-1		NUT	2	
			---*---		
	SEE FIG 2		PLACARD-IDENTIFICATION	1	
-29	S1695-2		SWITCH-MAP LIGHT	1	
-30	1213957-3		SPLICE CAP LH	1	
-31	1213957-4		SPLICE CAP RH	1	
-32	C664508-0101		CLOCK-ELECTRIC		
			ATTACHING PARTS		
	AN515B6R12		SCREW	3	
			---*---		
-33	S1413-2		INDICATOR-TURN & BANK	1	
	C661003-0504		INDICATOR-TURN COORDINATOR	1	
			ATTACHING PARTS		
	AN515B6R12		SCREW	4	
	AN936B68		WASHER	4	
			---*---		

CONTINUED ON NEXT PAGE

Instruments (Cont)

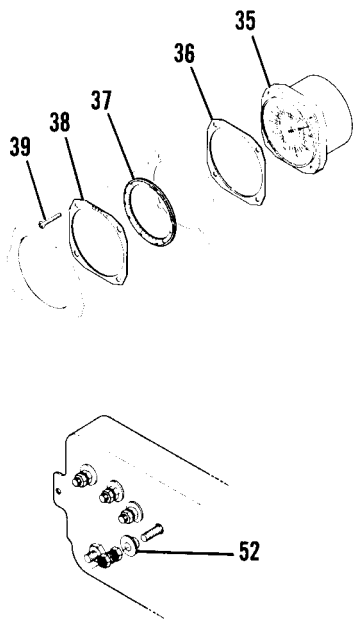

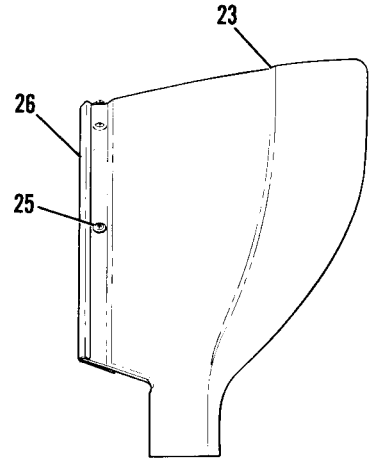

Detail **A**

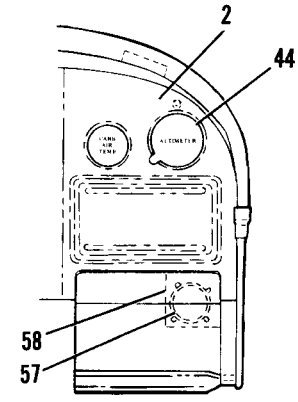

DUAL ALTIMETER INSTALLATION

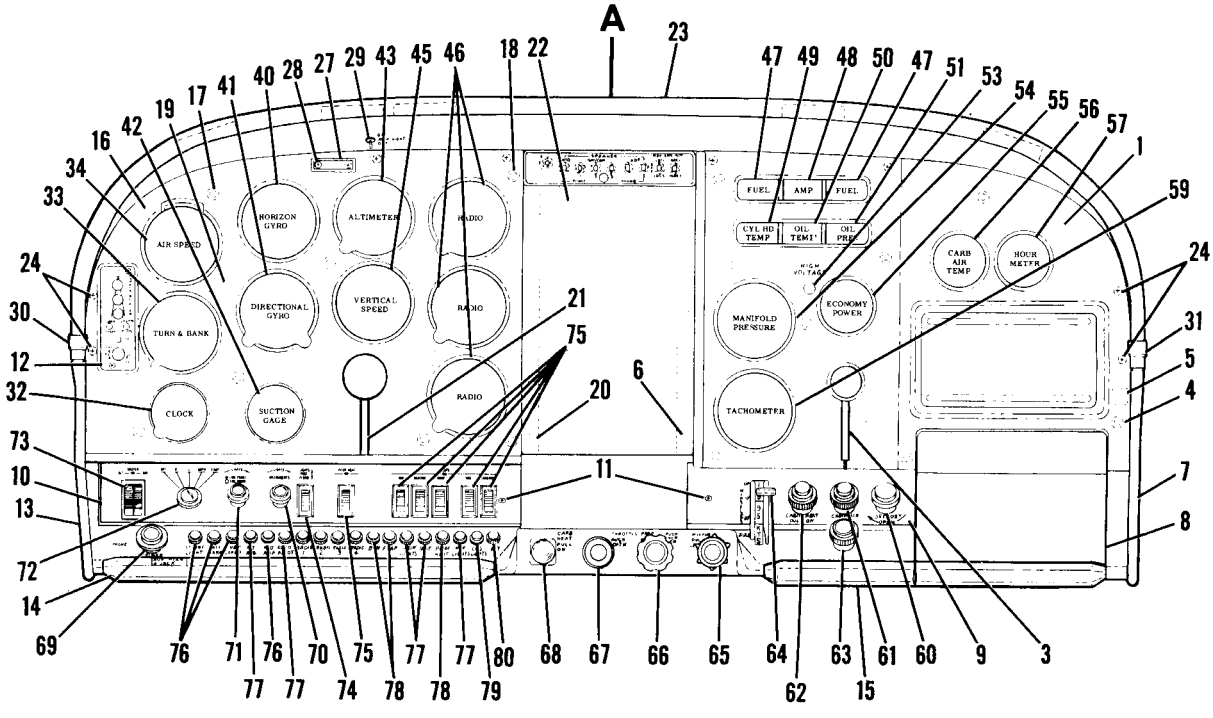

182 SERIAL 18264296 & ON

Figure 55A. Instrument Panel Equipment Installation

FIGURE AND INDEX NO.	PART NUMBER	DESCRIPTION 1 2 3 4 5 6 7	UNITS PER ASSY	USABLE ON CODE
55A-34	C661064-0204	INDICATOR-AIRSPEED	1	
		ATTACHING PARTS		
	AN515B6R12	SCREW	4	
		---*---		
		TRUE AIRSPEED INDICATOR INSTALLATION	NP	
-35	C661065-0204	INDICATOR-AIRSPEED	1	
-36	0700162-3	SPACER .051 THICKNESS	AR	
	0700162-4	SPACER .063 THICKNESS	AR	
	0700162-6	SPACER .071 THICKNESS	AR	
	0700162-7	SPACER .040 THICKNESS	AR	
-37	S2234-2	RING	1	
-38	0700162-1	RETAINER ASSY	1	
		ATTACHING PARTS		
-39	AN515B6R16	SCREW	4	
		---*---		
-40	C661076-0102 *	GYRO-HORIZON	1	
	C661076-0103 *	GYRO-HORIZON ALT	1	
	C661076-0105 *	GYRO-HORIZON ALT	1	
		ATTACHING PARTS		
	AN515-6R6	SCREW	3	
		---*---		
-41	C661075-0101 **	GYRO-DIRECTIONAL	1	
	C661075-0103 **	GYRO-DIRECTIONAL ALT	1	
	C661075-0106 **	GYRO-DIRECTIONAL ALT	1	
	C661075-0105 **	GYRO-DIRECTIONAL WITH HEADING REFERENCE	1	
	C661075-0107 **	GYRO-DIRECTIONAL ALT FOR C661075-0105	1	
		ATTACHING PARTS		
	AN515-6R6	SCREW	3	
		---*---		
	SEE FIG 91	GYRO-DIRECTIONAL NAV-O-MATIC	1	
-42	C668540-0101	GAGE-SUCTION	1	
		ATTACHING PARTS		
	AN515B6R12	SCREW	4	
		---*---		
-43	C661071-0101	ALTIMETER 20,000 FT FT & INCHES	1	
	C661025-0102	ALTIMETER 35,000 FT MILLIBARS 20 FT INCREMENTS	1	
-44	C661071-0102 ***	ALTIMETER 20,000 FT FT & MILLIBARS	1	
		ATTACHING PARTS		
	AN515B6R12	SCREW	4	
		---*---		
-45	C661080-0101	INDICATOR-VERTICAL SPEED	1	
		ATTACHING PARTS		
	AN515B6R12	SCREW	3	
		---*---		
-46		RADIO INSTALLATION SEE ELECTRONIC MANUAL	NP	
	C669502-0202	INSTRUMENT CLUSTER-LIGHTED	1	
		ATTACHING PARTS		
	NAS43DD3-64	SPACER	2	
	AN507B832R24	SCREW	2	
	AN340B8	NUT	2	
		---*---		
-47	G441344	GAGE-FUEL SW	2	
-48	G440437	AMMETER SW	1	
-49	G442702	GAGE-CYLINDER HEAD TEMP SW	1	
-50	G442786-63	GAGE-OIL TEMP SW	1	
-51	G444627	GAGE-OIL PRESSURE SW	1	
-52	401627	WASHER-INSULATOR SW	1	
	S1372-1	SENDING UNIT-CYLINDER HEAD TEMP	1	
	110691	WIRE-CYLINDER HEAD TEMP GAGE TO SENDING UNIT 106.00 IN LG BKI	AR	
	811542	POTENTIOMETER SW	1	
	S1894-3	BULB-RED INSTRUMENT CLUSTER	4	
	S1894-1	BULB-CW GE USED WITH POST LIGHTING	4	
	S1941-1	FILTER USED WITH POST LIGHTING	4	

CONTINUED ON NEXT PAGE

FIGURE AND INDEX NO.	PART NUMBER	DESCRIPTION 1 2 3 4 5 6 7	UNITS PER ASSY	USABLE ON CODE
55A-53	S2135-1	LIGHT ASSY-HIGH VOLTAGE	1	
-54	C662035-0101	GAGE-MANIFOLD PRESSURE	1	
-55	C668501-0211	INDICATOR-ECONOMY POWER	1	
		ATTACHING PARTS		
	AN507B632R12	SCREW	4	
	MS20365B632C	NUT	4	
		---*---		
-56	S1311-3	GAGE-CARBURETOR AIR TEMP	1	
		ATTACHING PARTS		
	AN507B632R12	SCREW	4	
	MS20365B632C	NUT	4	
	C7000-632-67	NUT TIN	4	
		---*---		
-57	C664501-0103	GAGE-HOURMETER	1	
		ATTACHING PARTS		
	AN507B632R6	SCREW	4	
	MS21044N06	NUT	4	
-58	1200749-1	BRACKET-HOURMETER MOUNTING USED WITH DUAL ALTIMETER INSTL ONLY	1	
		---*---		
-59	C668020-0104	TACHOMETER	1	
		ATTACHING PART		
	AN515B6R12	SCREW	4	
		---*---		
	S1605-2	SHAFT-TACHOMETER	1	
-60	S1268-14	CONTROL ASSY-DEFROST	1	
-61	S1241-36	CONTROL ASSY-CABIN AIR	1	
-62	S1241-37	CONTROL ASSY-CABIN HEAT	1	
-63	0513052-17	LIGHTER ASSY-CIGAR	1	
	L4858-1	PLUG-HEATING CUE	1	
	S1982-1	KNOB ASSY-LIGHTER	1	
	60232-1	CIRCUIT BREAKER-LIGHTER ASSY CUE	1	
-64	SEE FIG 84	FLAP CONTROL DETAIL INSTL	1	
-65	S1234-5	CONTROL ASSY-MIXTURE	1	
-66	C299506-0102	CONTROL ASSY-PROPELLER	1	
	1213646-1	WASHER-PROPELLER CONTROL	1	
	NAS43DD12-64	SPACER-PROPELLER CONTROL	1	
-67	C299505-0205	CONTROL ASSY-THROTTLE	1	
-68	S1230-10	CONTROL ASSY-CARBURETOR HEAT	1	
-69	C291502-0103	PRIMER ASSY-ENGINE	1	
	S1974-1	KNOB ASSY PRIMER	1	
-70	S1980-1	KNOB ASSY-INSTRUMENT DIMMING LIGHT	1	
		ATTACHING PARTS		
	AN565D8H2	SETSCREW	1	
		---*---		
	S1904-3	RESISTOR-VARIABLE	1	
	S20008270J	RESISTOR	1	
-71	S1995-4	KNOB ASSY-RADIO LIGHTS	1	
		ATTACHING PARTS		
	AN565B2H3	SETSCREW	1	
		---*---		
	S2091-1	RESISTOR-VARIABLE TANDEM	1	
	VAL5-6000	RESISTOR	1	
-72	C292501-0104	KIT-IGNITION SWITCH	1	
-73	S1994-1-1	SWITCH-MASTER	1	
	1570043-9	DIODE ASSY-MASTER SWITCH	1	
-74	S2160-2	SWITCH-CONSOLE LIGHTS	1	
-75	S2160-1	SWITCH-INSTRUMENT PANEL	6	
	S2161-1	COVER ASSY-SWITCH CUTOUT USED WHEN OPITIONAL SWITCHES ARE NOT INSTALLED	4	

CONTINUED ON NEXT PAGE

FIGURE AND INDEX NO.	PART NUMBER	DESCRIPTION 1 2 3 4 5 6 7	UNITS PER ASSY	USABLE ON CODE
55A-76	S1360-5L	CIRCUIT BREAKER 5 AMP	4	
-77	S1360-10L	CIRCUIT BREAKER 10 AMP	5	
-78	S1360-15L	CIRCUIT BREAKER 15 AMP	3	
-79	S1360-20L	CIRCUIT BREAKER 20 AMP	1	
-80	S1596-60	CIRCUIT BREAKER 60 AMP	1	
	1213716-1	PLUG BUTTON ASSY USED WHEN CIRCUIT BREAKER NOT INSTALLED	AR	
	0713854-1	BUS BAR-CENTER	1	
	0713854-2	BUS BAR-RH	1	
	0713854-4	BUS BAR-LH	1	
		NOTE. ¤THIS PART MUST HAVE A SECOND DASH NUMBER ADDED TO DENOTE COLOR. REFER TO HOW TO ORDER INTERIOR PARTS-PAGE VII.		
		NOTE. *THESE GYROS ARE PHYSICALLY & FUNCTIONALLY INTERCHANGEABLE.		
		NOTE. **THESE GYROS ARE PHYSICALLY & FUNCTIONALLY INTERCHANGEABLE.		
		NOTE. ***USED AS SECOND ALTIMETER FOR DUAL ALTIMETER INSTALLATION.		
		A---182 SERIAL 18264296 & ON		

Instrument Panel

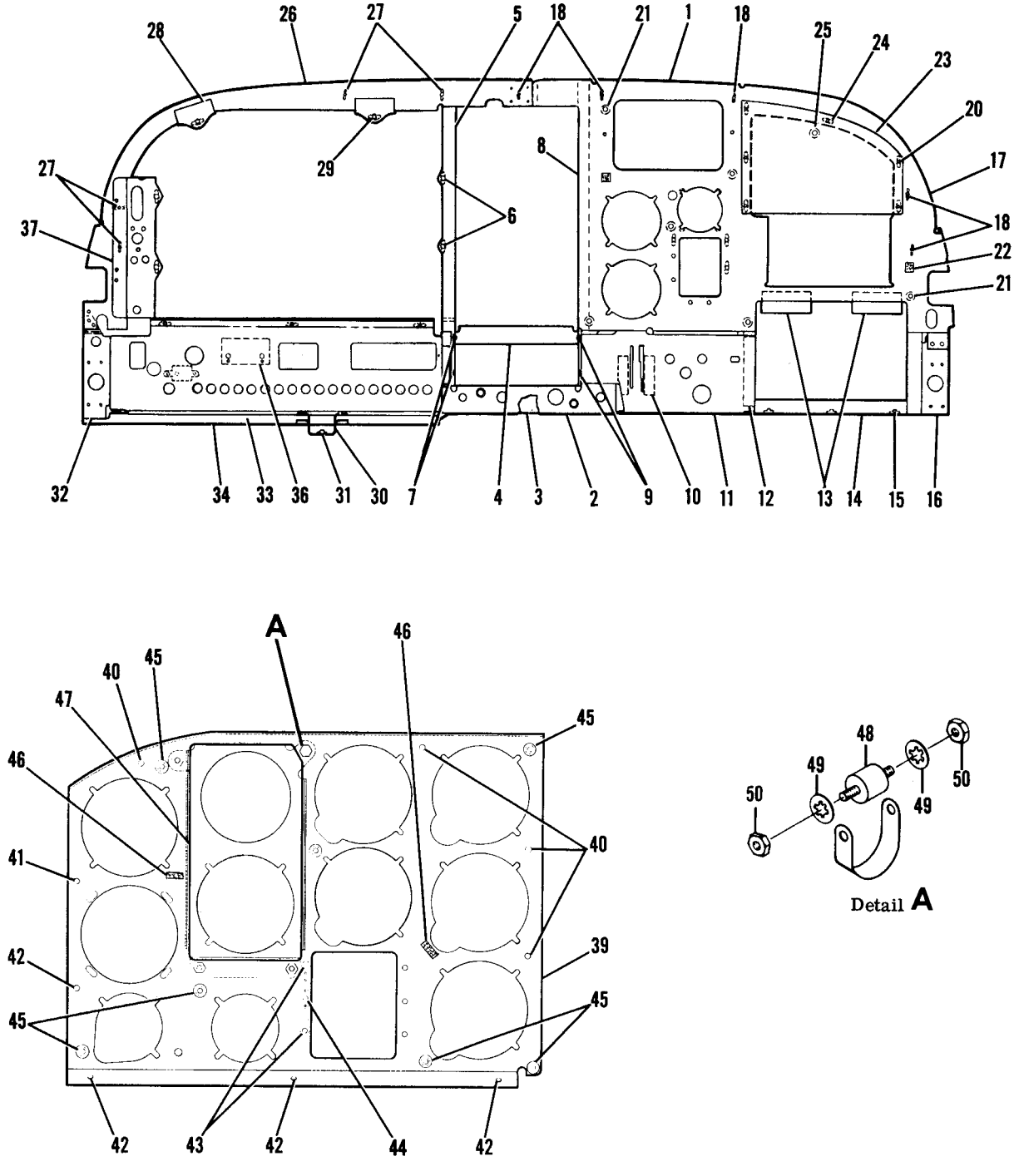

Figure 55B. Stationary Instrument Panel Structure Assembly

FIGURE AND INDEX NO.	PART NUMBER	DESCRIPTION 1 2 3 4 5 6 7	UNITS PER ASSY	USABLE ON CODE
55B- 1	0713482-1	STATIONARY INSTRUMENT PANEL STRUCTURE ASSY	1	A
	0713482-2	STATIONARY INSTRUMENT PANEL STRUCTURE ASSY	1	D
- 2	0713266-3	PANEL-LOWER CENTER	1	
- 3	0713775-1	REINFORCEMENT	1	
- 4	1213650-1	SUPPORT-INSTRUMENT PANEL	1	
		ATTACHING PARTS		
	AN515-6R8	SCREW	2	
		---*---		
- 5	1213374-5	SUPPORT ASSY-INSTRUMENT PANEL LH	1	B
	1213374-11	SUPPORT ASSY-INSTRUMENT PANEL LH	1	C
- 6	NAS684A3	NUTPLATE	2	
- 7	NAS697A06L	NUTPLATE	2	
- 8	1213374-6	SUPPORT ASSY-INSTRUMENT PANEL RH	1	B
	1213374-12	SUPPORT ASSY-INSTRUMENT PANEL RH	1	C
- 9	NAS697A06L	NUTPLATE	2	
-10	1262001-3	BRACKET-FLAP CONTROL MOUNTING	1	
-11	0713770-11	PANEL-INSTRUMENT LOWER RH	1	
-12	1213145-1	BRACKET-GLOVE BOX MOUNTING	1	
-13	0713776-1	STOP-DOOR	2	
-14	0713779-1	ANGLE ASSY-DOOR MOUNTING	1	
-15	NAS697A08	NUTPLATE	3	
	0713809-1	CLIP-WIRE RETAINER	2	
-16	0713864-1	BRACKET-BULKHEAD ADAPTOR	1	
-17	0713480-1	PANEL ASSY RH-STATIONARY	1	A
	0713480-3	PANEL ASSY RH-STATIONARY	1	D
-18	NAS680A08	NUTPLATE	5	
-19	NAS697A08	NUTPLATE	3	
-20	NAS697A06L	NUTPLATE	6	
-21	MS35489-4	GROMMET	6	
-22	1213337-3	FASTENER	2	
	1213337-9	SHIM	2	
-23	1213694-2	COVER ASSY-ACCESS	1	
	1213387-7	COVER ASSY-ACCESS DUAL ALTIMETER INSTL ONLY	1	
		ATTACHING PARTS		
-24	NAS601-5	SCREW	6	
		---*---		
-25	MS35489-4	GROMMET	1	
-26	0713326-1	BULKHEAD ASSY-LH INSTRUMENT PANEL	1	A
	0713326-3	BULKHEAD ASSY-LH INSTRUMENT PANEL	1	D
-27	NAS697A08	NUTPLATE	4	
-28	1213169-12	SUPPORT ASSY-REMOVABLE PANEL	2	
-29	NAS697A08	NUTPLATE	1	
-30	0713267-1	ATTACH ASSY-PARKING BRAKE	1	
-31	NAS697A3	NUTPLATE	1	
-32	0713783-3	BRACKET-BULKHEAD ADAPTOR	1	
-33	1213062-11	SUPPORT ASSY-LOWER LH INSTRUMENT PANEL	1	
	NAS682A3	NUTPLATE	1	
-34	0713336-1	SWITCH PANEL ASSY	1	
-35	NAS697A08	NUTPLATE	3	
-36	1270707-1	BRACKET ASSY-RELAY	1	
	1270707-2	BRACKET	1	
	SEE FIG 93	RELAY	1	
-37	0713338-1	BRACKET ASSY-LH INSTRUMENT PANEL SUPPORT WEU 0713338-3	1	
	0713338-3	BRACKET ASSY-LH INSTRUMENT PANEL SUPPORT	1	
-38	NAS697A3	NUTPLATE	2	
-39	0713481-3	PANEL ASSY-REMOVABLE WEU 0713481-5	1	
	0713481-5	PANEL ASSY-REMOVABLE	1	
		ATTACHING PARTS		
-40	NAS221-12	SCREW	4	
	NAS42HT6-19	SPACER	4	
-41	NAS514P1032-10	SCREW	1	
-42	NAS221-6	SCREW	4	
		---*---		
-43	NAS696A08	NUTPLATE	2	
-44	NAS697A08	NUTPLATE	1	
-45	MS35489-4	GROMMET	7	
-46	1213327-12	FASTENER	2	
	1213327-14	SHIM	2	

CONTINUED ON NEXT PAGE

FIGURE AND INDEX NO.	PART NUMBER	DESCRIPTION 1 2 3 4 5 6 7	UNITS PER ASSY	USABLE ON CODE
55B-47	1213170-1	PANEL-SHOCK MOUNTED ----------		
		ATTACHING PARTS		
-48	1213645-1	SHOCK MOUNT ----------	4	
-49	AN936A8	WASHER ----------	8	
-50	AN340B8	NUT ----------	8	
		---*---		
		A---182 SERIAL 18262466 THRU 18264295		
		B---182 SERIAL 18262466 THRU 18263475		
		C---182 SERIAL 18263476 & ON		
		D---182 SERIAL 18264296 & ON		

This page intentionally left blank.

Equipment (Cont)

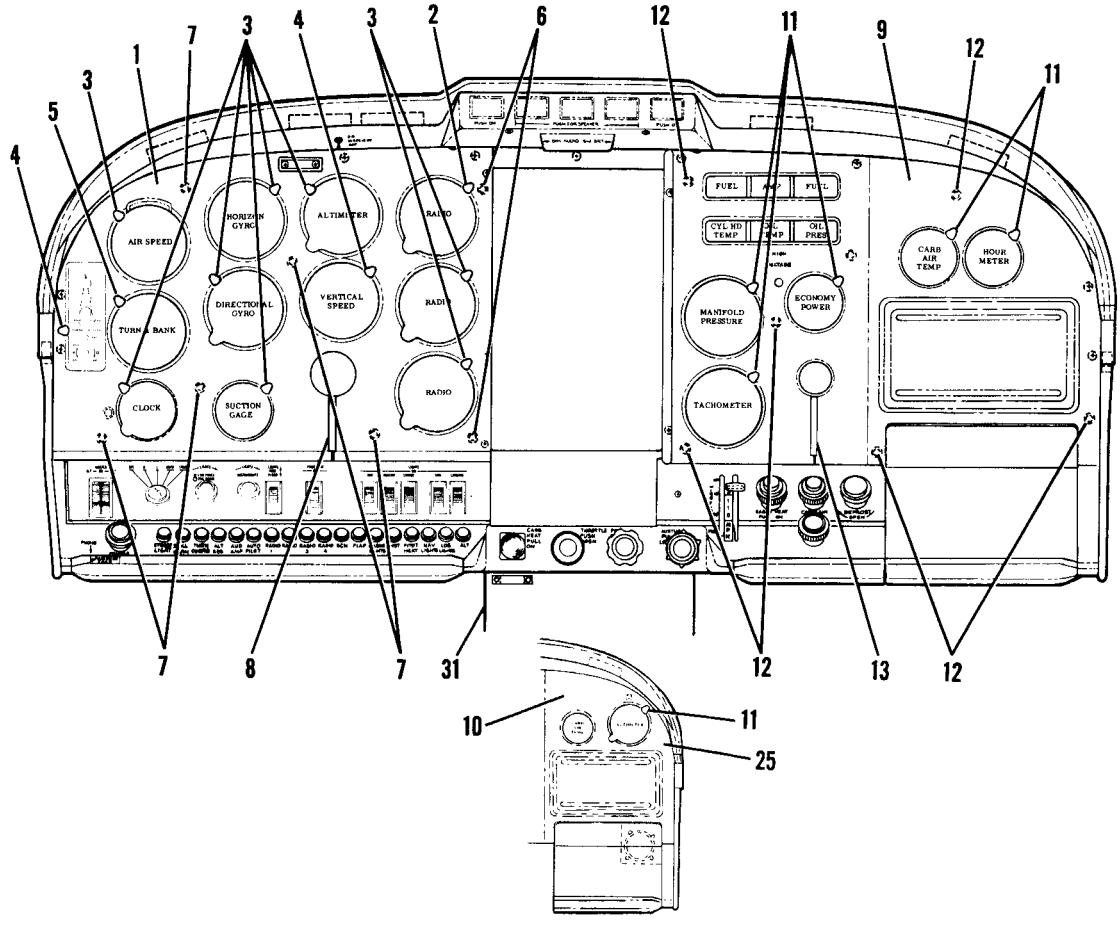

DUAL ALTIMETER INSTALLATION

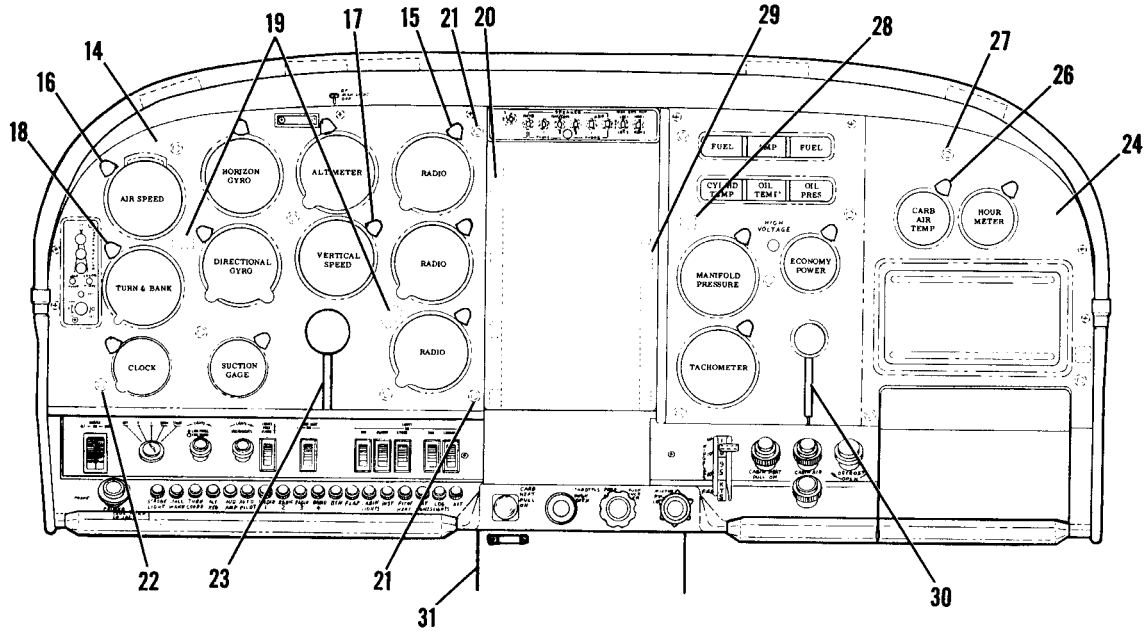

Figure 56. Post Lighted Instrument Panel Installation

FIGURE AND INDEX NO.	PART NUMBER	DESCRIPTION 1 2 3 4 5 6 7	UNITS PER ASSY	USABLE ON CODE
56 -		POST LIGHTED INSTRUMENT PANEL INSTALLATION	NP	A
- 1	0713483-6 ¤	COVER ASSY-POST LIGHTED LH	1	B
- 2	1213379-1	POST LIGHT ASSY	1	B
	S1899-1G	LIGHT ASSY	1	B
	MS25237-330	BULB	1	B
- 3	1213379-2	POST LIGHT ASSY	8	B
	S1899-1G	LIGHT ASSY	1	B
	MS25237-330	BULB	1	B
- 4	1213379-7	POST LIGHT ASSY	2	B
	S1899-2G	LIGHT ASSY	1	B
	MS25237-330	BULB	1	B
- 5	1213379-8	POST LIGHT ASSY	1	B
	S1899-2G	LIGHT ASSY	1	B
	MS25237-330	BULB	1	B
- 6	1513839-5	GUIDE	2	B
- 7	1513839-3	GUIDE	5	B
- 8	1213335-1	LAP SEAL	1	B
	1213327-1	FASTENER	2	B
- 9	0713484-2 ¤	COVER ASSY-POST LIGHTED RH	1	B
-10	0713484-6 ¤	COVER ASSY-POST LIGHTED RH DUAL ALTIMETER INSTALLATION	1	B
-11	1213379-2	POST LIGHT ASSY	5	B
	S1899-1G	LIGHT ASSY	1	B
	MS25237-330	BULB	1	B
-12	1513839-3	GUIDE	7	B
-13	1213163-2	LAP SEAL	1	B
	1213327-7	FASTENER	2	B
-14	0713488-2 ¤	COVER ASSY-POST LIGHTED LH	1	C
-15	1213379-1	POST LIGHT ASSY	1	C
	S1899-16	LIGHT ASSY	1	C
	MS25237-330	BULB	1	C
-16	1213379-2	POST LIGHT ASSY	8	C
	S1899-1G	LIGHT ASSY	1	C
	MS25237-330	BULB	1	C
-17	1213379-7	POST LIGHT ASSY	1	C
	S1899-2G	LIGHT ASSY	1	C
	MS25237-330	BULB	1	C
-18	1213379-8	POST LIGHT ASSY	1	C
	S1899-2G	LIGHT ASSY	1	C
	MS25237-330	BULB	1	C
-19	1213327-1	FASTENER	2	C
-20	1213327-10	FASTENER	5	C
-21	1513839-5	GUIDE	2	C
-22	153839-3	GUIDE	5	C
-23	1513335-1	LAP SEAL	1	C
-24	0713484-10 ¤	COVER ASSY-POST LIGHTED RH	1	C
-25	0713484-12 ¤	COVER ASSY-POST LIGHTED RH USED WITH DUAL ALTIMETERS	1	C
-26	1213379-2	POST LIGHTE ASSY	5	C
	S1899-1G	LIGHT ASSY	1	C
	MS25237-330	BULB	1	C
-27	1513839-3	GUIDE	7	C
-28	1213327-7	FASTENER	2	C
-29	1213327-10	FASTENER	5	C
-30	1213163-2	LAP SEAL	1	C
-31	SEE FIG 100	CONSOLE COVER INSTL-LIGHTED	NP	

NOTE. ¤THIS PART MUST HAVE A SECOND DASH NUMBER ADDED TO DENOTE COLOR. REFER TO HOW TO ORDER INTERIOR PARTS-PAGE XIII.

A---182 SERIAL 18262446 & ON
B---182 SERIAL 18262446 THRU 18264295
C---182 SERIAL 18264296 & ON

Glove Box

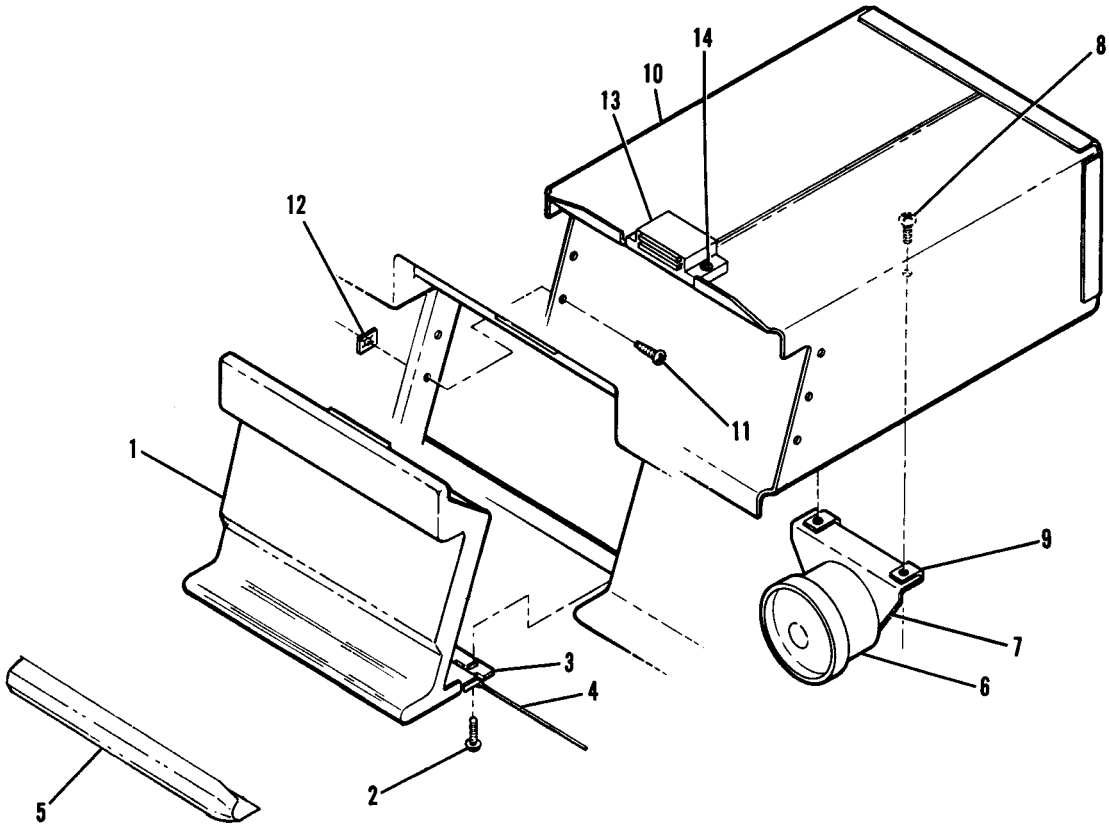

Figure 57. Map Compartment Installation

FIGURE AND INDEX NO.	PART NUMBER	1 2 3 4 5 6 7 DESCRIPTION	UNITS PER ASSY	USABLE ON CODE
57 -		MAP COMPARTMENT INSTALLATION	NP	A
- 1	0713881-15 □	DOOR ASSY-MAP COMPARTMENT	1	B
	075180-8 □	DOOR ASSY-MAP COMPARTMENT	1	C
		ATTACHING PARTS		
- 2	AN515-8R7	SCREW	3	
		---*---		
- 3	0713785-1	HINGE ASSY	1	
- 4	MS20253-2-646	HINGE PIN	1	
- 5	1213317-9	KNEE BUMPER	1	
- 6	S2077-5	HORN-STALL WARNING	1	
- 7	0713738-3	BRACKET ASSY-STALL WARNING	1	
		ATTACHING PARTS		
- 8	S1021Z8-8	SCREW	2	
		---*---		
- 9	NAS395-12-3	NUT	2	
-10	0713778-9	COMPARTMENT ASSY-MAP	1	
		ATTACHING PARTS		
-11	S1021Z6-6	SCREW	5	
-12	NAS446-2-3	NUT	5	
		---*---		
-13	S1895-1	CATCH EDNP	1	
		ATTACHING PARTS		
-14	S1021Z6-6	SCREW	2	
	NAS446-2-3	NUT	2	
		---*---		
	NAS557-3A	GROMMET	4	
		A---182 SERIAL 18262446 & ON		
		B---182 SERIAL 18262446 THRU 18262607		
		18263476 & ON		
		C---182 SERIAL 18262608 THRU 18263475		

Fuselage Equipment

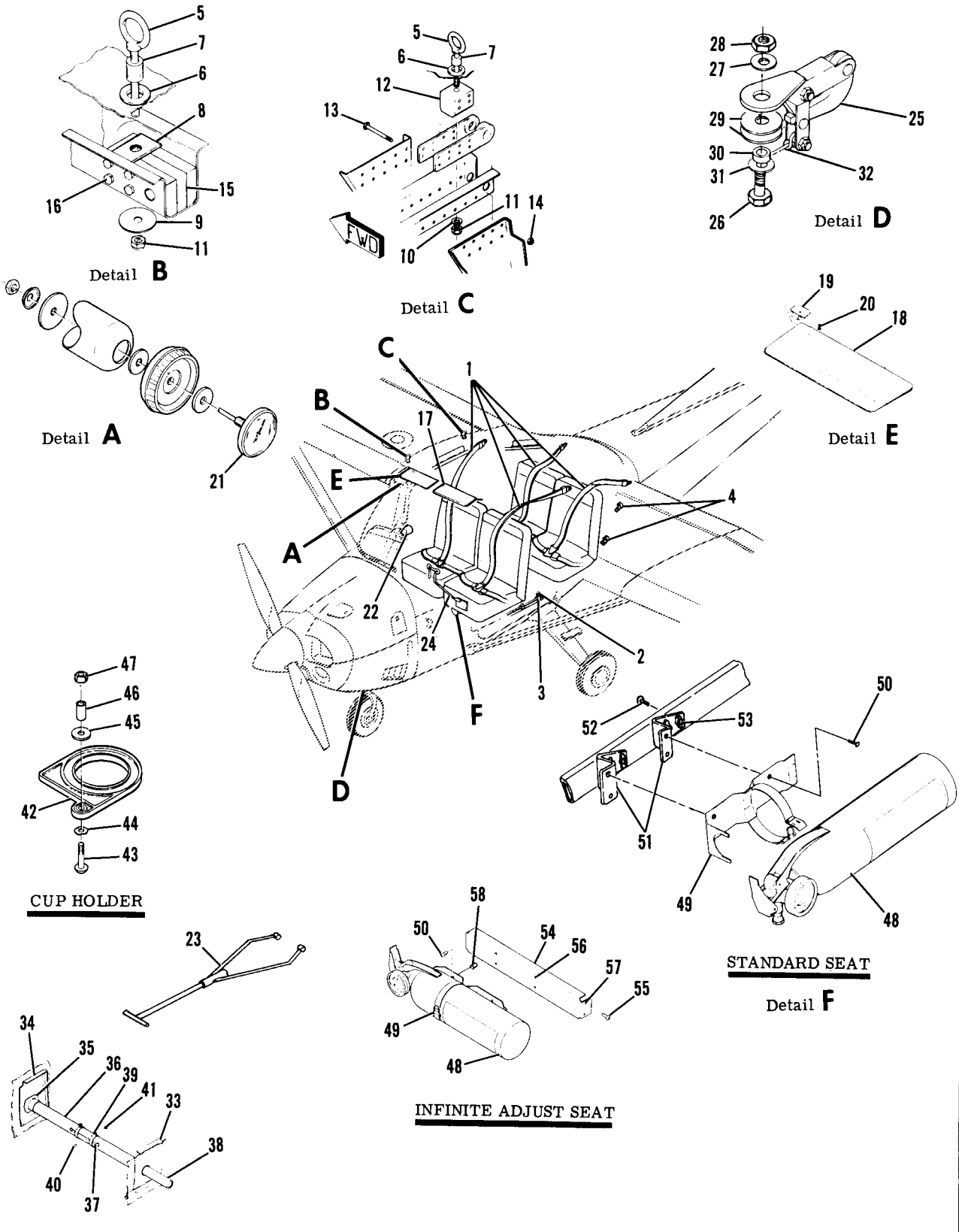

Figure 58. Fuselage Equipment Installation

FIGURE AND INDEX NO.	PART NUMBER	DESCRIPTION 1 2 3 4 5 6 7	UNITS PER ASSY	USABLE ON CODE
58 -		FUSELAGE EQUIPMENT INSTALLATION	NP	
- 1	SEE FIG	SHOULDER HARNESS ASSY	1	
- 2	1201039-1	TIE DOWN ASSY-CARGO	2	
		ATTACHING		
- 3	AN4-7A	BOLT	1	
	AN960-416	WASHER	1	
		---*---		
- 4	0711083-1	LATCH ASSY-CARGO TIE DOWN	7	
		ATTACHING PARTS		
	AN4-6A	BOLT	1	
	S1074-1	WASHER	1	
		---*---		
- 5	0541115-3	EYEBOLT-HOISTING	4	
- 6	MS35489-17	GROMMET	4	
- 7	0541115-2	SPACER	4	
- 8	0541115-4	PLATE-FRONT SPAR	2	
- 9	AN970-5	WASHER	2	
-10	AN960-516	WASHER	2	
-11	MS21042L5	NUT	4	
-12	0700612-2	BLOCK-REAR SPAR	2	
		ATTACHING PARTS		
-13	AN3-15A	BOLT	4	
-14	MS21044N3	NUT	4	
		---*---		
-15	0700612-3	BLOCK-FRONT SPAR	2	
		ATTACHING PARTS		
-16	AN3-15A	BOLT	4	
	MS21044N3	NUT	4	
		---*---		
-17	0700122-13	SUN VISOR ASSY-LH	1	
-18	0700122-12	SUN VISOR ASSY-RH	1	
		ATTACHING PARTS		
-19	0713011-12	BRACKET	1	
-20	AN507-1032R14	SCREW	2	
		---*---		
-21	C668507-0101	GAGE-OUTSIDE AIR TEMPERATURE	1	
	SEE FIG 58	STRETCHER INSTALLATION	1	
-22	SEE FIG 59	COMPASS & MIRROR INSTALLATION	1	
-23	0501019-1	TOW BAR ASSY	1	
-24	1260144-3	LOCK ASSY-CONTROL	1	
-25	0500228-2	TOW HOOK-GLIDER	1	
		ATTACHING PARTS		
-26	AN5-7A	BOLT	1	
-27	AN960-516L	WASHER	1	
-28	MS21042L5	NUT	1	
-29	AN970-5	WASHER	2	
-30	0500228-5	BUSHING	1	
-31	S1450-5-14-063	WASHER	1	
		---*---		
-32	0500228-3	CORD-GLIDER TOW HOOK	1	
		LIFT HANDLE INSTALLATION	NP	
-33	0712748-1	REINFORCEMENT-LH	1	
-34	0712748-2	REINFORCEMENT-RH	1	
-35	0712750-2	BRACKET ASSY-RH	1	
	0712750-1	BRACKET ASSY-LH	1	
-36	0712749-1	TUBE-LIFT BAR	1	
-37	0712751-1	SPRING	1	
	0712752-1	STOP	1	
-38	1612030-1	HANDLE ASSY	2	
-39	AN735D20	CLAMP	2	
		ATTACHING PARTS		
-40	AN515-8R10	SCREW	1	
-41	AN340-8	NUT	1	
		---*---		

CONTINUED ON NEXT PAGE

FIGURE AND INDEX NO.	PART NUMBER	DESCRIPTION 1 2 3 4 5 6 7	UNITS PER ASSY	USABLE ON CODE
58 -42	0501022-1	CUPHOLDER	2	
		ATTACHING PARTS		
-43	AN525-10R18	SCREW USED ON LH SIDE	1	
	AN525-10R12	SCREW USED ON RH SIDE	1	
-44	S1357-3	WASHER USED ON LH & RH SIDE	1	
-45	AN960-10	WASHER USED ON LH SIDE	1	
	AN960-10	WASHER USED ON RH SIDE	2	
-46	NAS43DD3-32	SPACER USED ON LH SIDE ONLY	1	
-47	AN960-10L	WASHER USED ON LH SIDE ONLY	1	
		---*---		
-48	C421001-0101	FIRE EXTINGUISHER	1	
-49	C421001-0102	BRACKET ASSY	1	
		ATTACHING PARTS		
-50	AN520-10R7	SCREW	4	
		---*---		
-51	0713946-1	BRACKET ASSY	2	
		ATTACHING PARTS		
-52	AN520-10R14	SCREW	4	
		---*---		
-53	NAS697A3	NUTPLATE	4	
-54	0713945-11	BRACKET ASSY-INFINITE ADJUST SEAT ONLY	1	
		ATTACHING PARTS		
-55	AN520-10R10	SCREW	4	
		---*---		
-56	NAS680A3	NUTPLATE	4	
-57	NAS696A3	NUTPLATE	4	
-58	NAS43DD3-8	SPACER	4	

Fuselage Equipment (Cont)

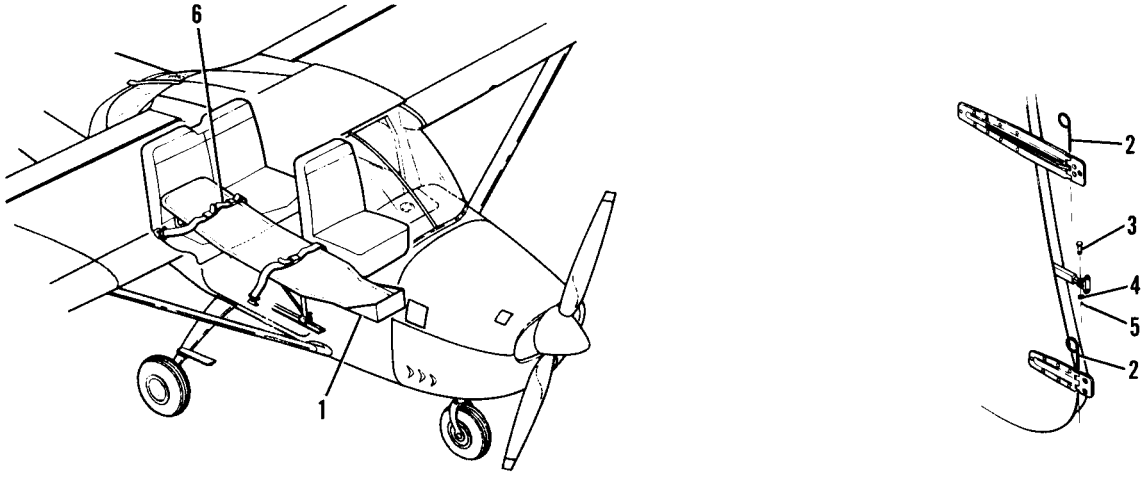

Figure 59. Portable Stretcher Installation

FIGURE AND INDEX NO.	PART NUMBER	DESCRIPTION 1 2 3 4 5 6 7	UNITS PER ASSY	USABLE ON CODE
59 -		STRETCHER INSTALLATION-PORTABLE	NP	
- 1	0700164-6	STRETCHER-PORTABLE	1	
- 2	S1426-1	PIN-HINGE	2	
- 3	MS20392-1C17	PIN-FLATHEAD	1	
- 4	AN960-10L	WASHER	1	
- 5	MS24665-151	PIN-COTTER	1	
- 6	FDC-2475-50	BELT EXTENSION DAPI	1	
	S1809-1	BELT EXTENSION METAL TO METAL BUCKLE	1	

Fuselage Equipment (Cont)

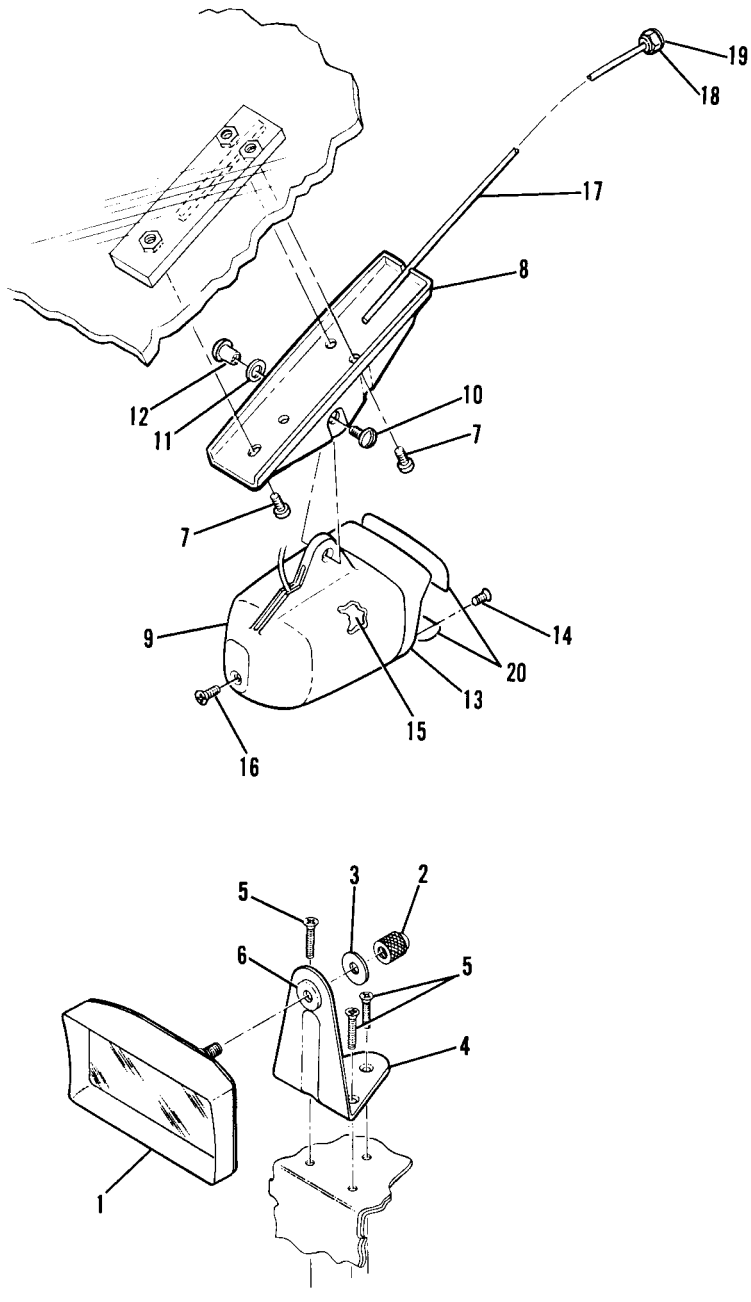

Figure 60. Rear View Mirror & Compass Installation

FIGURE AND INDEX NO.	PART NUMBER	DESCRIPTION 1 2 3 4 5 6 7	UNITS PER ASSY	USABLE ON CODE
60 -		REAR VIEW MIRROR INSTALLATION	NP	
- 1	0500312-2	MIRROR & COVER ASSEMBLY	1	
		ATTACHING PARTS		
- 2	0500313-1	NUT	1	
- 3	S1450-4A11-063	WASHER	1	
		---*---		
- 4	1213293-1	BRACKET ASSY	1	
		ATTACHING PARTS		
- 5	AN507B832R8	SCREW	3	
		---*---		
- 6	MS35489-6	GROMMET	1	
		COMPASS INSTALLATION	NP	
	0413517-1	COMPASS ASSY	1	
		ATTACHING PARTS		
- 7	AN500B8-6	SCREW	3	
		---*---		
- 8	0413517-3	BASE-COMPASS	1	
- 9	0413517-5	CUP-COMPASS	1	
		ATTACHING PARTS		
-10	D366	SCREW	1	
-11	AN960-D10L	WASHER	1	
-12	D4023X.375	POST	1	
		---*---		
-13	0413517-15	BEZEL-COMPASS	1	
		ATTACHING PARTS		
-14	AN510B4R6	SCREW	2	
		---*---		
-15	C660501-0101	COMPASS	1	
		ATTACHING PARTS		
-16	AN507B832R14	SCREW	1	
		---*---		
-17	0713817-4	TUBE ASSEMBLY	1	
		ATTACHING PARTS		
-18	S1216-3	NUT	1	
-19	AN936A416	WASHER	1	
	NAS620A416L	WASHER	1	
		---*---		
-20	SEE FIG 2	PLACARD-COMPASS CORRECTION	2	

Propeller (Cont)

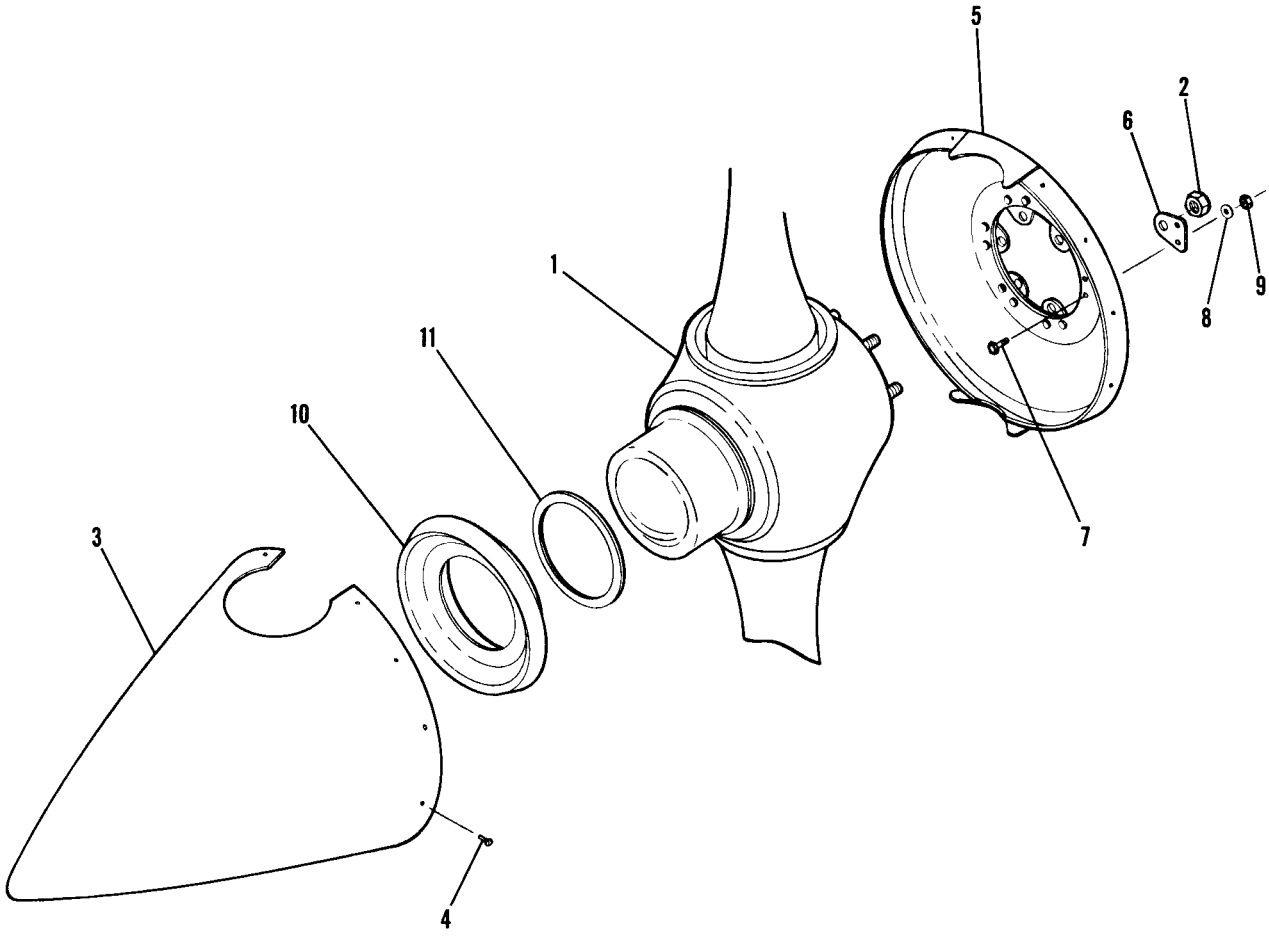

Figure 61. Propeller Installation

FIGURE AND INDEX NO.	PART NUMBER	DESCRIPTION 1 2 3 4 5 6 7	UNITS PER ASSY	USABLE ON CODE
61 -		PROPELLER INSTALLATION	NP	
- 1	SEE FIG 62	PROPELLER ASSEMBLY	1	
		ATTACHING PARTS		
- 2	A1639-2	NUT MCL	6	
		---*---		
- 3	0752637-11	DOME ASSEMBLY-SPINNER	1	
		ATTACHING PARTS		
- 4	NAS221-8	SCREW	14	
		---*---		
- 5	0752637-1	BULKHEAD ASSEMBLY	1	
		ATTACHING PARTS		
- 6	0752005-4	LUG	6	
- 7	AN3-4A	BOLT	12	
- 8	AN960-10	WASHER	12	
- 9	MS21045L3	NUT	12	
		---*---		
-10	1250412-1	SUPPORT-SPINNER	1	
-11	0752620-1	SPACER-SPINNER SUPPORT	AR	

Propeller (Cont)

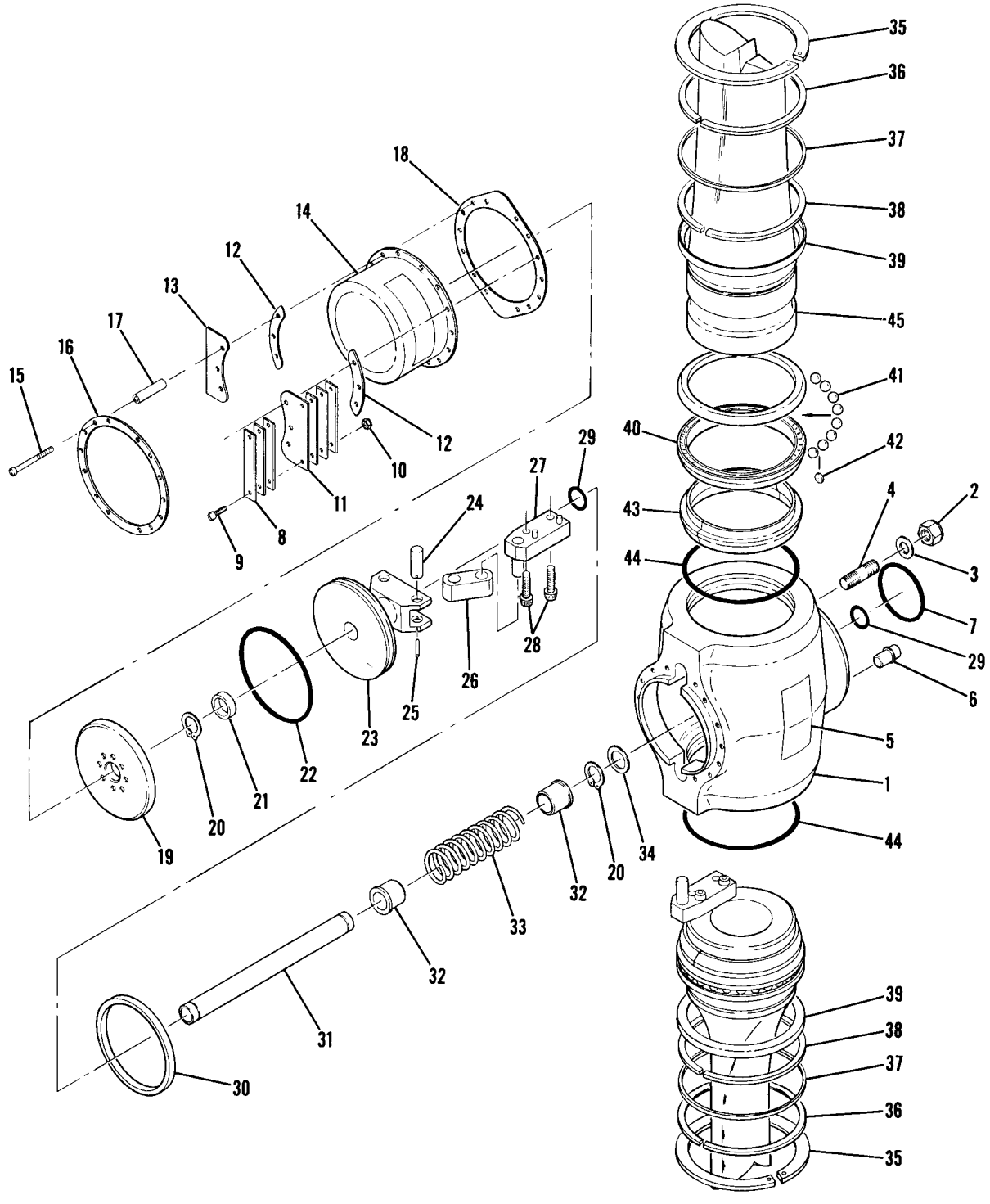

Figure 62. Propeller Assembly

FIGURE AND INDEX NO.	PART NUMBER	DESCRIPTION 1 2 3 4 5 6 7	UNITS PER ASSY	USABLE ON CODE
62 -	C161009-0104	PROPELLER ASSY MCL 2A34C203/90DCA-8 82 IN DIA	1	
- 1	C3910/C203	HUB ASSY MCL	NP	
		ATTACHING PARTS		
- 2	A1639-2	NUT-HUB MOUNTING MCL	6	
- 3	A1638-2	WASHER MCL	6	
		---*---		
- 4	B3921	STUD MCL	6	
- 5	A2230	PLACARD MCL	1	
- 6	A4001	DOWEL-HUB ALIGNMENT MCL	2	
- 7	A1633-3	O-RING MCL	1	
- 8	A3906	WEIGHT-BALANCE MCL	AR	
- 9	A1635-36	SCREW ATTACH ONE WEIGHT MCL	2	
	A1635-37	SCREW ATTACH TWO WEIGHTS MCL	2	
	A1635-40	SCREW ATTACH THREE WEIGHTS MCL	2	
	A1635-67	SCREW ATTACH FOUR WEIGHTS MCL	2	
	A1635-56	SCREW ATTACH FIVE WEIGHTS MCL	2	
	A1635-68	SCREW ATTACH SIX WEIGHTS MCL	2	
-10	A1639-23	NUT MCL	2	
-11	B3908	BRACKET-BALANCE WEIGHT MCL	AR	
-12	B4016	GASKET-BRACKET MCL	AR	
-13	B4026	WEIGHT-BALANCE 2 MAX MCL	AR	
-14	C4129	CYLINDER MCL	1	
		ATTACHING PARTS		
-15	A1635-70	SCREW MCL	14	
-16	B4342	RING-CYLINDER MCL	1	
-17	B4354	TUBE-CYLINDER MOUNT LONG MCL	AR	
	B4354-1	TUBE-CYLINDER MOUNT SHORT MCL	AR	
-18	B4138	GASKET-CYLINDER MCL	1	
		---*---		
-19	B3526	SUPPORT-SPACER MCL	1	
-20	A1636-7	RING-RETAINING MCL	2	
-21	A2108	SPACER-LOW PITCH STOP MCL	1	
-22	A1633-12	O-RING MCL	1	
-23	C3418	PISTON-BLADE ACTUATING MCL	1	
-24	B3414	ROLL PIN MCL	2	
-25	A3150-5	ROLL PIN MCL	2	
-26	A3902	LINK-BLADE ACTUATOR MCL	2	
-27	B3905	ACTUATING PIN & BASE ASSY MCL	2	
		ATTACHING PARTS		
-28	A1635-66	CAP SCREW MCL	2	
		---*---		
-29	A1633-9	O-RING MCL	2	
-30	A1937	SPACER-HIGH PITCH STOP MCL	1	
-31	B2345	TUBE-PISTON ROD MCL	1	
-32	A3124	GUIDE-SPRING MCL	2	
-33	A3125	SPRING-PITCH RETURN MCL	1	
-34	A2351	WASHER-FIBER MCL	1	
-35	B4426	RING-RETAINING MCL	2	
-36	A4427	RING-WIRE MCL	2	
-37	B4407	SHIM-.032 MCL	AR	
	B4407-1	SHIM-.065 MCL	AR	
	B4407-2	SHIM-.051 MCL	AR	
-38	B4277-3	SHIM-ANTI BLADE SHAKE .003 IN. MCL	AR	
	B4277-4	SHIM-ANTI BLADE SHAKE .004 IN. MCL	AR	
	B4277-5	SHIM-ANTI BLADE SHAKE .005 IN. MCL	AR	
	B4277-6	SHIM-ANTI BLADE SHAKE .006 IN. MCL	AR	
	B4277-7	SHIM-ANTI BLADE SHAKE .007 IN. MCL	AR	
	B4277-8	SHIM-ANTI BLADE SHAKE .008 IN. MCL	AR	
	B4277-10	SHIM-ANTI BLADE SHAKE .010 IN. MCL	AR	
	B4277-12	SHIM-ANTI BLADE SHAKE .012 IN. MCL	AR	
	B4277-14	SHIM-ANTI BLADE SHAKE .014 IN. MCL	AR	
	B4277-16	SHIM-ANTI BLADE SHAKE .016 IN. MCL	AR	
	B4277-18	SHIM-ANTI BLADE SHAKE .018 IN. MCL	AR	
	B4277-20	SHIM-ANTI BLADE SHAKE .020 IN. MCL	AR	
-39	B4408	CARRIER-SHIM MCL	2	
-40	C3411	BEARING RACE MATCHED SET MCL	2	
-41	A1634-6	BALL BEARING MCL	80	
-42	B4014	BALL SEPERATOR MCL	80	
-43	C3903	RETAINER-SPLIT MATCHED SET MCL	1	
-44	A1633-37	O-RING MCL	2	
-45	90DCA-8	BLADE	2	

Cowling (Cont)

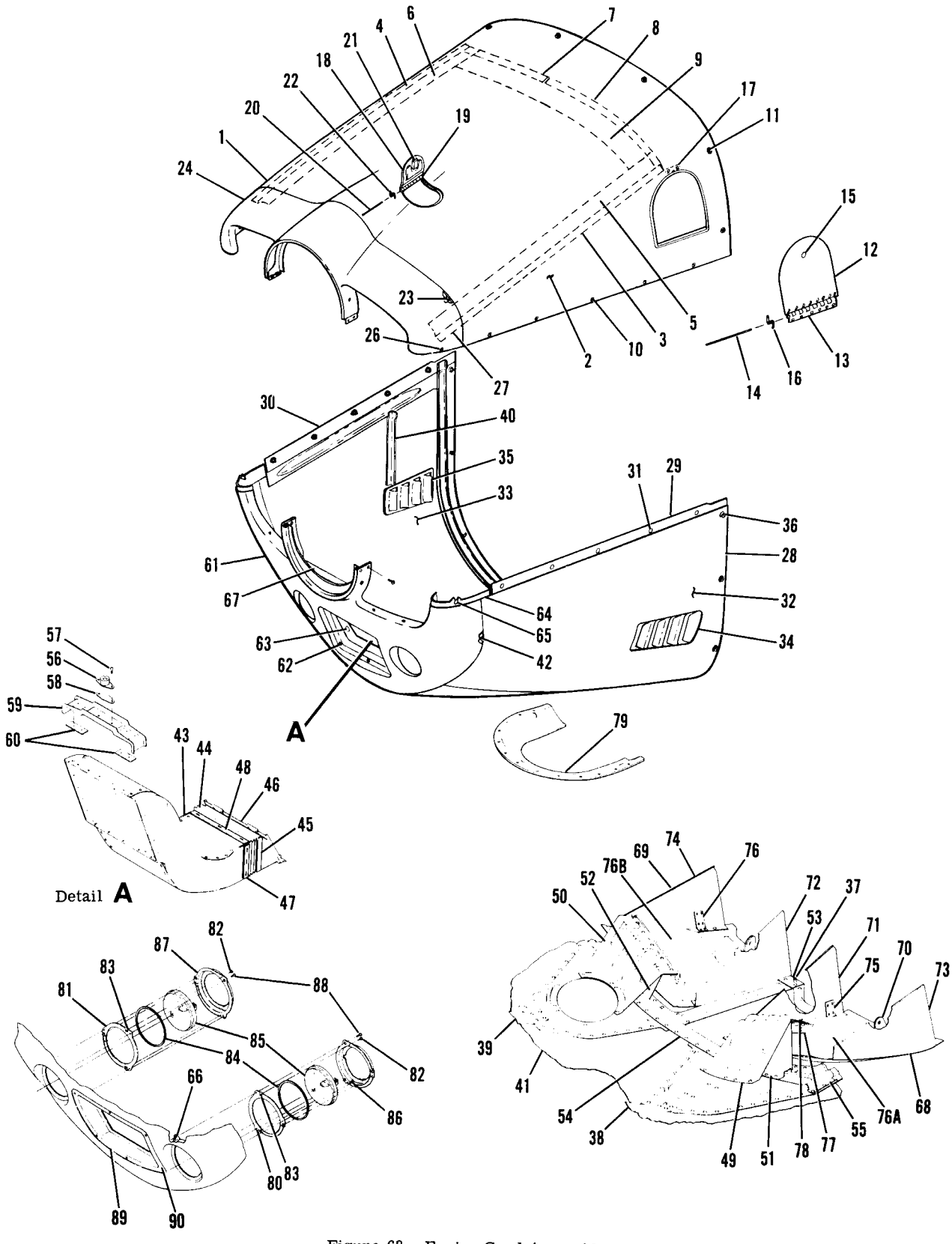

Figure 63. Engine Cowl Assembly

FIGURE AND INDEX NO.	PART NUMBER	DESCRIPTION 1 2 3 4 5 6 7	UNITS PER ASSY	USABLE ON CODE
63 -		COWL ASSY-ENGINE	NP	A
- 1	0752706-47	COWL ASSY-UPPER	1	B
	0752706-53	COWL ASSY-UPPER	1	C
- 2	0752706-49	SKIN ASSY-UPPER	1	
- 3	0752706-41	BAFFLE-LH	1	
- 4	0752706-42	BAFFLE-RH	1	
- 5	0752706-43	SEAL-LH	1	
- 6	0752706-44	SEAL-RH	1	
- 7	0752706-46	BAFFLE-RH AFT	1	
- 8	0752706-51	BAFFLE-LH AFT	1	
- 9	0752706-48	SEAL-AFT	1	
-10	40S5-4	STUD CLC	10	
	4002-H	GROMMET CLC	10	
	CM2791-1	SNAP RING	10	
-11	27S3-2	STUD CLC	6	
	2600SW2	WASHER CLC	6	
-12	1552004-52	DOOR ASSY-ACCESS	1	
-13	1552004-22	HINGE HALF	1	
-14	1552004-17	PIN	1	
-15	KM610-051	LATCH	1	
-16	1552010-1	SPRING	1	
-17	1552004-25	STRIKER	2	
-18	1552004-53	DOOR ASSY-OIL ACCESS	1	
-19	1552004-22	HINGE HALF	1	
-20	1552004-17	PIN	1	
-21	KM610-051	LATCH	1	
-22	15521010-1	SPRING	1	
-23	S1550-1	WASHER	27	
-24	0752056-8	NOSE CAP ASSY-UPPER	1	B
	0752056-14	NOSE CAP ASSY-UPPER	1	C
-25		DELETED NOT PROCURABLE		
-26	40S5-4	STUD CLC	2	
	4002-H	GROMMET CLC	2	
	CM2791-1	SNAP RING	2	
-27	0752056-10	BAFFLE	1	
-28	0752706-200	COWL ASSY-LOWER LESS FLAPS	1	B
	0752706-201	COWL ASSY-LOWER LESS FLAPS	1	C
-29	0752706-7	PARTING STRIP-LH	1	
-30	0752706-8	PARTING STRIP-RH	1	
-31	S244-16	RECEPTACLE CLC	10	
-32	0752706-39	SKIN ASSY-LH	1	
-33	0752706-40	SKIN ASSY-RH	1	
-34	1213309-5	LOUVER-LH	1	B
	1213309-9	LOUVER-LH	1	C
-35	1213309-6	LOUVER-RH	1	B
	1213309-10	LOUVER-RH	1	C
-36	27S3-2	STUD CLC	6	
-37	27S3-3	STUD CLC	2	
	2600SW2	WASHER	8	
-38	0752700-9	DOUBLER-LH	1	
-39	0752700-8	DOUBLER-RH	1	
-40	0752700-16	REINFORCEMENT	2	
-41	0752706-38	SKIN ASSY	1	
-42	S1550-1	WASHER	36	
-43	0752602-13	DUCT ASSY-CARBURETOR AIR INTAKE	1	
-44	0752016-14	EXPANDER BOOT ASSY	1	
	0752016-7	BOOT EXPANDER	1	
	0752021-1	CLIP	2	
	0752016-10	SEAL TOP & BOTTOM	2	
	0752016-11	SEAL SIDE	2	
	0752047-1	STIFFENER	1	
	0752026-6	ADAPTER ASSY	1	
	0752048-1	DOUBLER	1	
-45	0752023-1	RETAINER SIDE	2	
-46	0752023-5	RETAINER TOP & BOTTOM	2	
-47	0752023-1	RETAINER SIDE	2	
-48	0752023-4	RETAINER TOP & BOTTOM	2	

CONTINUED ON NEXT PAGE

-72	0752609-28	BAFFLE-INBD RH	1	
-73	0752609-29	BAFFLE-OUTBD LH	1	
-74	0752609-30	BAFFLE-OUTBD RH	1	
-75	0752609-31	ANGLE-INBD	1	
-76	0752609-20	ANGLE-OUTBD	1	
-76A	0752609-5	PAN ASSY-LH	1	B
	0752609-39	PAN ASSY-LH	1	C
-76B	0752609-6	PAN ASSY-RH	1	B
	0752609-40	PAN ASSY-RH	1	C
-77	0752625-200	HINGE ASSY	1	
-78	0752609-27	PIN HINGE	1	
-79	0752707-1	FAIRING-COWL & NOSE GEAR	1	
		LANDING LIGHT INSTALLATION	NP	
-80	0752644-5	PLATE ASSY-LH	1	
-81	0752644-6	PLATE ASSY-RH	1	
		ATTACHING PARTS		
-82	S1021Z6-8	SCREW	2	
		---*---		
-83	NAS488-1-3	NUTPLATE	2	
-84	0752646-1	GASKET	AR	
-85	4509	LAMP	2	
-86	0752644-1	BRACKET-LH	1	
-87	0752644-2	BRACKET-RH	1	
		ATTACHING PARTS		
-88	AN515-8R8	SCREW	3	
		---*---		
-89	0752055-1	FRAME-AIR FILTER	1	
		ATTACHING PARTS		
-90	AN509-10R8	SCREW	6	
		---*---		

A---182 SERIAL 18262466 & ON
B---182 SERIAL 18262466 THRU 18263475
C---182 SERIAL 18263476 & ON

FIGURE AND INDEX NO.	PART NUMBER	DESCRIPTION 1 2 3 4 5 6 7	UNITS PER ASSY	USABLE ON CODE
64 -		ENGINE INSTALLATION	NP	
- 1	SEE FIG 65	ENGINE ASSEMBLY	1	
		ATTACHING PARTS		
- 2	AN6-34A	BOLT	2	
- 3	AN6-25A	BOLT	2	
- 4	MS20365-624C	NUT	4	
- 5	AN960-616	WASHER-ENGINE MOUNT	8	
- 6	0550153-1	WASHER-ENGINE MOUNT	2	
		---*---		
- 7	SEE NOTE *	CONTROL ASSY-CARBURETOR HEAT	1	
		ATTACHING PARTS		
	AN742D3	CLAMP	1	
	NAS446-4-3	NUT	1	
	S1021Z8-6	SCREW	1	
- 8	AN742D3	CLAMP	1	
- 9	AN3-3A	BOLT	1	
-10	MS20364-1032C	NUT	1	
-11	0450311-5	CLAMP-CARBURETOR HEAT	1	
-12	AN960-10L	WASHER	1	
-13	MS20364-1032C	NUT	1	
		---*---		
-14	SEE NOTE *	CONTROL ASSY-PROPELLER	1	
		ATTACHING PARTS		
-15	S1104-3	ROD END-CONTROL	1	
-16	AN3-7A	BOLT	1	
-17	S1450-3-10-032	WASHER	1	
-18	AN960D10	WASHER	2	
-19	MS20364-1032C	NUT	3	
-20	AN315-3R	NUT	1	
-21	0750138	ARM	1	
-22	AN3-5A	BOLT	1	
	0550100-14	BRACKET	1	
	S1486DG5U	CLAMP	1	
	S1021Z8-8	SCREW	1	
		---*---		
-23	0450191-1	CLAMP-PROPELLER CONTROL	1	
	AN741-18P	CLAMP	1	
	AN3-11A	BOLT	1	
	AN936B10	WASHER	1	
-24	MS20365-1032C	NUT	1	
	S1486DG5U	CLAMP	1	
	0550100-9	BRACKET	1	
	S1021Z8-8	SCREW	1	
-25	MS21919DG34	CLAMP	1	
-26	MS21919DG6	CLAMP		
		ATTACHING PARTS		
	NAS563-21	BOLT	1	
	AN960-10	WASHER	1	
	MS20364-1032C	NUT	1	
		---*---		
-27	SEE NOTE *	CONTROL ASSEMBLY-THROTTLE	1	
		ATTACHING PARTS		
-28	0750612-1	BRACKET-THROTTLE CONTROL	1	
-29	S351	CLAMP-THROTTLE CONTROL	1	
-30	AN3-6A	BOLT	2	
-31	NAS43HT3-9	SPACER	2	
-32	MS21044N3	NUT	2	
-33	S1106-4	ROD END-THROTTLE CONTROL	1	
-34	AN4-11A	BOLT	1	
-35	AN970-4	WASHER	1	
-36	MS21042L4	NUT	1	
-37	AN960-416L	WASHER	1	
		---*---		

CONTINUED ON NEXT PAGE

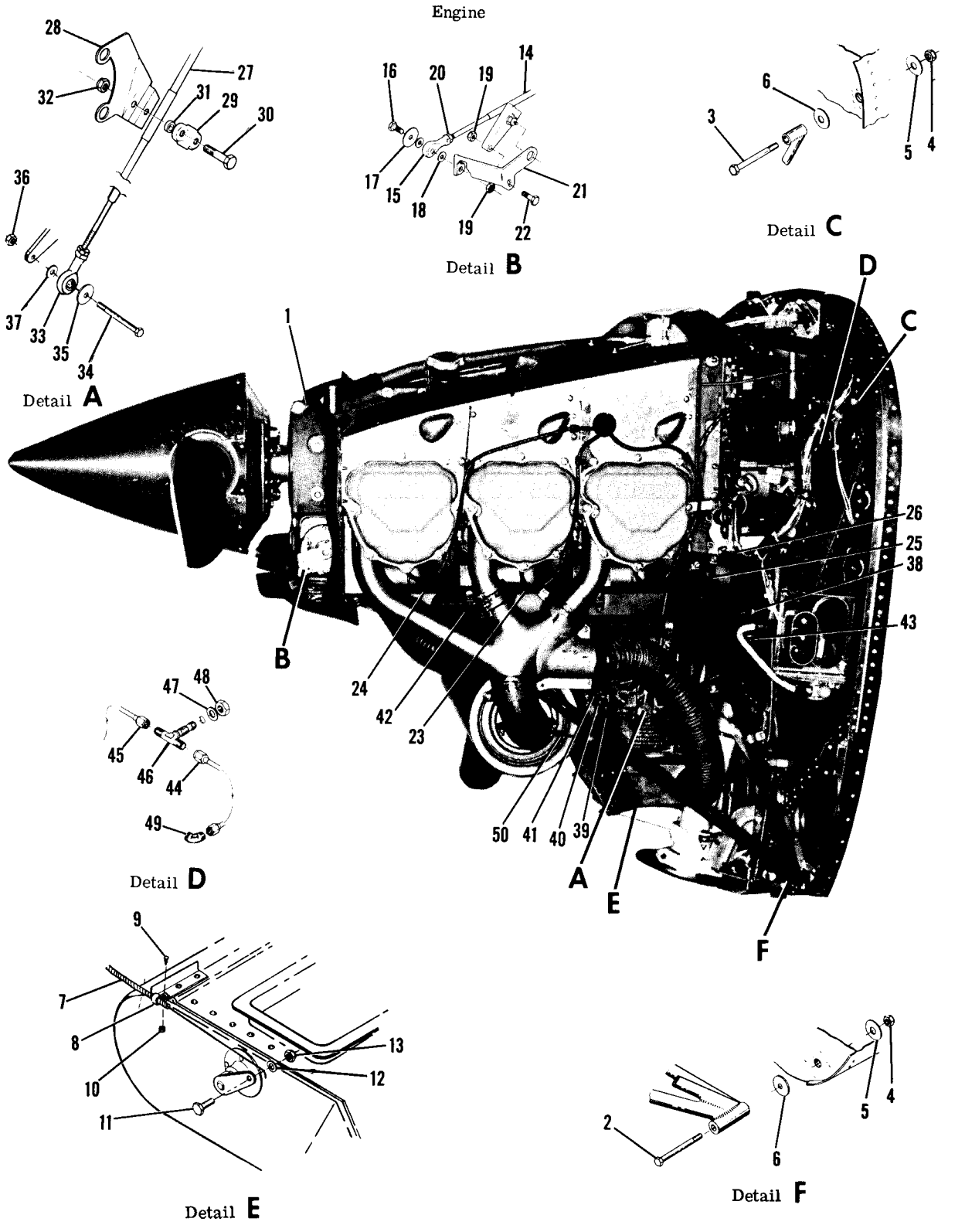

Figure 64. Engine Installation

FIGURE AND INDEX NO.	PART NUMBER	DESCRIPTION 1 2 3 4 5 6 7	UNITS PER ASSY	USABLE ON CODE
64 -38	SEE NOTE %	CONTROL ASSEMBLY-MIXTURE	1	
		ATTACHING PARTS		
-39	0450311-4	CLAMP-MIXTURE CONTROL	1	
	MS21042L4	NUT	1	
	AN960-416L	WASHER	2	
-40	AN742D4	CLAMP	1	
-41	0750159-1	CLIP-MIXTURE CONTROL	1	
	AN3-3A	BOLT	1	
	MS21044N3	NUT	1	
	S1486DG3U	CLAMP TIN	1	
	MS21919D6-11	CLAMP	1	
	S1021Z8-6	SCREW	1	
		---*---		
-42	0750139	ADAPTER-OIL TEMPERATURE RH SIDE	2	
		ATTACHING PARTS		
	AN900-10	GASKET	1	
	NAS435A4-92	CLAMP	2	
	AN742D34	CLAMP	2	
	S1021Z8-8	SCREW	2	
	MS21919DG4	CLAMP	1	
	S1021Z8-6	SCREW	1	
	NAS446-4-3	NUT	1	
		---*---		
-43	0700099-78	LINE ASSEMBLY-MANIFOLD PRESSURE FIREWALL TO ENGINE	1	
		ATTACHING PARTS		
	MS21919DG2	CLAMP	1	
	S1021Z8-6	SCREW	1	
	NAS446-4-3	NUT	1	
	0750282-1	ADAPTER ASSEMBLY ATTACH LINE TO ENGINE	1	
	AN833-2D	ELBOW ATTACH LINE TO FIREWALL	1	
	AN960D516	WASHER ATTACH LINE TO FIREWALL	1	
	AN924-2D	NUT ATTACH LINE TO FIREWALL	1	
		---*---		
	NAS398-50	CLAMP TIN	1	
-44	0700099-79	PRIMER LINE-TEE TO MANIFOLD LH	1	
-45	0700099-80	PRIMER LINE-TEE TO MANIFOLD RH	1	
		ATTACHING PARTS		
-46	AN834-2D	TEE	1	
-47	AN960D516	WASHER	1	
-48	AN924-2D	NUT	1	
		---*---		
-49	AN4023-1	ELBOW-PRIMING JET	2	
-50	C668501-0204	PROBE-ECONOMY POWER	1	
	AN515-4R4	SCREW	2	

NOTE. %REFER TO APPLICABLE INSTRUMENT PANEL FIGURE.

Engine (Cont)

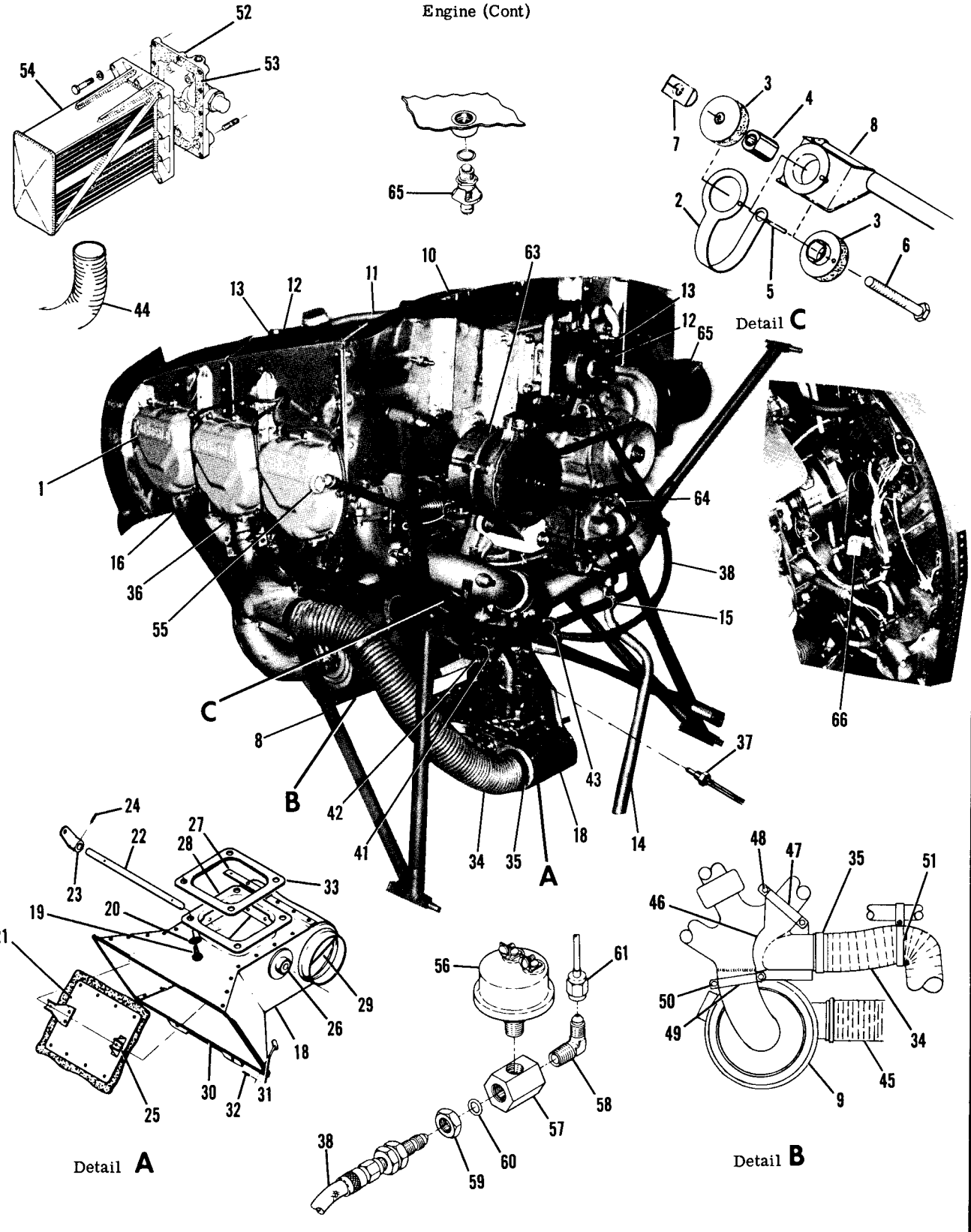

Figure 65. Engine Assembly

FIGURE AND INDEX NO.	PART NUMBER	DESCRIPTION 1 2 3 4 5 6 7	UNITS PER ASSY	USABLE ON CODE
65 -		ENGINE ASSY-CONTINENTAL	NP	A
- 1	0-470-R *	ENGINE SPEC 35 CM	1	B
	0-470-R %	ENGINE SPEC 25 CM	1	B
	0-470-S @*	ENGINE SPEC 2 CM	1	C
	0-470-S @%	ENGINE SPEC 1 CM	1	C
		ATTACHING PARTS		
- 2	0750137	BONDING STRAP-ENGINE MOUNT	4	
- 3	0750132-1	SHOCK MOUNT ASSY-ENGINE	4	
- 4	0750132-2	SPACER-BONDED	1	
- 5	MS20253-5-100	PIN	4	
- 6	AN7-33A	BOLT	4	
- 7	539911	NUT-BARREL CM	4	
	AN960-716L	WASHER	4	
		---*---		
- 8	0751600-1	ENGINE MOUNT	1	
- 9	SEE FIG 68	STACK ASSY-EXHAUST	1	
-10	SEE FIG 69	BAFFLES INSTALLATION-ENGINE	1	
-11	1200106-108	TUBE-BREATHER LINE FORWARD	1	
		ATTACHING PARTS		
-12	S51-12	HOSE 3.0 IN LG BKI REF S-51-12-12	2	
-13	NAS397-18-1	CLAMP	4	
		---*---		
-14	0700099-45	TUBE-BREATHER LINE REAR	1	
		ATTACHING PARTS		
-15	AN742D34	CLAMP	1	
	AN742D12	CLAMP	1	
	S1021Z8-8	SCREW	1	
		---*---		
-16	C161031-0101 **	GOVERNOR-PROPELLER	1	
	SEE FIG 67	GOVERNOR-PROPELLER ALTERNATE	1	
-17		DELETED NOT PROCURABLE		
-18	0750144-21	AIRBOX ASSY-CARBURETOR	1	
		ATTACHING PARTS		
-19	MS20074-04-3	BOLTS	4	
-20	0750131-1	WASHER	4	
		---*---		
-21	0750133-7	VALVE ASSY	1	
-22	0750133-8	SHAFT VALVE	1	
-23	0750111-19	ARM ASSY	1	
-24	MS16562-16	ROLL PIN EN	1	
-25	0750133-9	BRACKET ASSY	2	
-26	0750113-1	HOUSING ASSY	2	
-27	0750156-1	STRAP	1	
-28	0750126-4	COLLAR	1	
-29	0750133-22	DUST BAFFLE	1	
-30	0750144-20	SEAL	1	
-31	WL98293-3-.360	STUD ALIC	2	
-32	S1853-4	PIN ALIC	2	
	AN960-10L	WASHER	2	
-33	0750142-1	GASKET-CARBURETOR AIR BOX	1	
-34	S1053K20T	HOSE-CARBURETOR HEAT 26.0 IN LG BKI	1	
		REF S1053K20T26.0		
		ATTACHING PARTS		
-35	NAS398-42	CLAMP	2	
		---*---		
-36	0750121	DEFLECTOR ASSY	6	
-37	0550209-1	PROBE-CARBURETOR AIR TEMP	1	
-38	S1167-4-0460	HOSE-OIL PRESSURE	1	
		ATTACHING PARTS		
-39	AN912-3	BUSHING	1	
-40	0752037-1	ELBOW	1	
-41	0752038-1	BRACKET	1	
-42	MS21919DG9	CLAMP	2	
-43	NAS43A12-27	CLAMP TIN	1	
	MS21919DG4	CLAMP	1	
	S1021Z10-10	SCREW	2	
	S1021Z8-6	SCREW	1	
	NAS446-4-3	NUT	2	
		---*---		

CONTINUED ON NEXT PAGE

FIGURE AND INDEX NO.	PART NUMBER	DESCRIPTION 1 2 3 4 5 6 7	UNITS PER ASSY	USABLE ON CODE
65 -44	S1053K24T	HOSE-16.0 IN LB BK1 REF S1053K24T 16.0	1	
		ATTACHING PARTS		
	NAS398-50	CLAMP	2	
		---*---		
-45	S1053E24T	HOSE-HEATER 25.25 IN LG BK1 REF S1053E24T 25.25	1	
		ATTACHING PARTS		
	NAS398-50	CLAMP	2	
		---*---		
	S1372-1	SENDING UNIT-CYLINDER HEAD TEMP IN NO. 1 CYLINDER HEAD	1	B
	S1372-1	SENDING UNIT-CYLINDER HEAD TEMP IN NO. 3 CYLINDER HEAD	1	D
	S1372-2	SENDING UNIT-CYLINDER HEAD TEMP IN NO. 3 CYLINDER HEAD	1	E
	AN900-6	GASKET	1	
	0750038-4	FILTER-CARBURETOR AIR	1	
	0752055-1	FRAME-AIR FILTER	1	
-46	0750607-4	SHROUD ASSY-OUTBD	1	
	0750607-5	SHROUD ASSY-INBD	1	
		ATTACHING PARTS		
-47	0750225-1	CLAMP	2	
-48	AN3-5A	BOLT	2	
	AN960-10L	WASHER	2	
	MS21044N3	NUT	2	
-49	0750225-2	CLAMP	2	
-50	AN3-4A	BOLT	2	
	AN960-10L	WASHER	2	
	MS21044N3	NUT	2	
-51	MS21919DG40	CLAMP	1	
	S1485D20U	CLAMP	1	
	S1021Z10-8	SCREW	1	
		---*---		
		LARGE OIL COOLER INSTL-NON CONGEALING	NP	
-52	626332	PLATE-OIL COOLER CM	1	
-53	626342	GASKET-OIL COOLER TO PLATE CM	1	
	626341	GASKET-PLATE TO CRANKCASE CM	1	
-54	639171	COOLER-ENGINE OIL	1	
	625966	GASKET-PLUG	1	
-55	0750212-1	DIP STICK-OIL	1	
-56	S1711-1	SWITCH-OIL PRESSURE	1	
-57	1213158-4	ADAPTER	1	
-58	MS20822-4D	ELBOW	1	
-59	AN924-4	NUT	1	
-60	MS28778-4	O RING	1	
-61	1200106-138	LINE ASSY-OIL PRESSURE	1	
-62	S1964-3	VALVE ASSY-OIL QUICK DRAIN	1	
-63	SEE FIG 98	ALTERNATOR INSTALLATION	1	
-64	SEE FIG 90	OIL-FILTER	1	
-65	SEE FIG 66	STARTER-12 VOLT HEAVY DUTY	1	
-66	SEE FIG 88	CONTROL-STRAINER DRAIN	1	

NOTE. *THIS ENGINE IS EQUIPPED WITH NON-CONGEALING OIL COOLER. WHEN ORDERING IT IS NECESSARY TO INCLUDE SPEC NO.

NOTE. %THIS ENGINE IS EQUIPPED WITH STANDARD OIL COOLER. WHEN ORDERING IT IS NECESSARY TO INCLUDE SPEC NO.

NOTE. **FOR DETAILS OF THIS GOVERNOR REFER TO APPLICABLE MCCAULEY MANUAL.

NOTE. @WHEN ORDERING THIS ENGINE FOR AIRPLANES SERIAL 18262466 THRU 18263475 ALSO ORDER SK182-50 CONVERSION KIT.

A---182 SERIAL 18262466 & ON
B---182 SERIAL 18262466 THRU 18263475
C---182 SERIAL 18263476 & ON
D---182 SERIAL 18263476 THRU 18263666
E---182 SERIAL 18263667 & ON

FIGURE AND INDEX NO.	PART NUMBER		DESCRIPTION 1 2 3 4 5 6 7	UNITS PER ASSY	USABLE ON CODE
66 -			ENGINE COMPONENTS & ASSOCIATED PARTS 0-470-R ENGINE	NP	
- 1	625765		MAGNETO CM SLICK 662	2	
- 2	534750		GASKET-MAGNETO TO CRANKCASE CM	2	
- 3	629076		MAGNETO DRIVE GEAR CM	1	
- 4	633311		IGNITION HARNESS COMPLETE CM SLICK	1	
- 5	627392		OIL COOLER HARRISON CM	1	
- 6	631095		OIL COOLER MODINE CM	1	
- 7	630050		OIL COOLER-LARGE NONCONGEALING CM	1	
- 8	626332		PLATE-OIL COOLER CM USED WITH NONCONGEALING COOLER	1	
- 9	626342		GASKET-OIL COOLER TO PLATE CM FOR NONCONGEALING COOL	1	
-10	626341		GASKET-PLATE TO CRANKCASE CM FOR NONCONGEALING COOLER	1	
-11	625017		GASKET-COOLER TO PLATE CM STANDARD COOLER	1	
-12	625303		GASKET-CRANKCASE TO COOLER CM STANDARD COOLER	1	
-13	C611501-0102		ALTERNATOR-60 AMP 14 VOLT SEE FIG 95	1	
-14	S1597-1-30.8		ALTERNATOR DRIVE BELT	1	
-15	C611001-0101		VOLTAGE REGULATOR	1	
-16	538076		BEVEL GEAR-GOVERNOR DRIVE CM	1	
-17	629176		STARTER-12 VOLT HEAVY DUTY CM DELCO	1	
	634592		STARTER-12 VOLT HEAVY DUTY CM PRESTOLITE	1	
-18	MS9021-038		ORING-STARTER TO ENGINE	1	
-19	0750142-1		GASKET-CARBURETOR AIR BOX TO CARBURETOR	1	
-20	633027		CARBURETOR CM MARVEL SCHEBLER TYPE MA4-5	1	
-21	35985		GASKET-CARBURETOR TO ENGINE CM	1	
-22	0750038-4		AIR FILTER-CARBURETOR DONALDSON P10-6150	1	
-23	0750038-3		GASKET-AIR FILTER DONALDSON P-100232	1	
-24	SH15	**	SPARK PLUGS FOR USE IN SHIELDED SYSTEMS WITH 5/8 24-3A THREADS	12	
-25	SH20A	**	SPARK PLUGS FOR USE IN SHIELDED SYSTEMS WITH 5/8 24-3A THREADS	12	
-26	SH200A	**	SPARK PLUGS FOR USE IN SHIELDED SYSTEMS WITH 3/4 20-3A THREADS	12	

NOTE. *THIS LISTING IS COMPLIED TO PROVIDE PART NUMBERS OF COMMONLY USED ENGINE COMPONENTS AND ASSOCIATED ACCESSORIES. RELATIONSHIP OF THESE PARTS TO ENGINE OR AIRCRAFT ASSEMBLIES IS NOT INDICATED BY INDENTION. THIS FIGURE IS NOT ILLUSTRATED. INDEX NUMBERS ARE PROVIDED FOR LOCATION OF LINE ON WHICH PART NUMBER APPEARS.

NOTE. **SPARK PLUGS ARE LISTED IN ORDER OF HEAT RANGE, PROGRESSIVELY COLDER FROM TOP LISTING TO BOTTOM.

Engine (Cont)

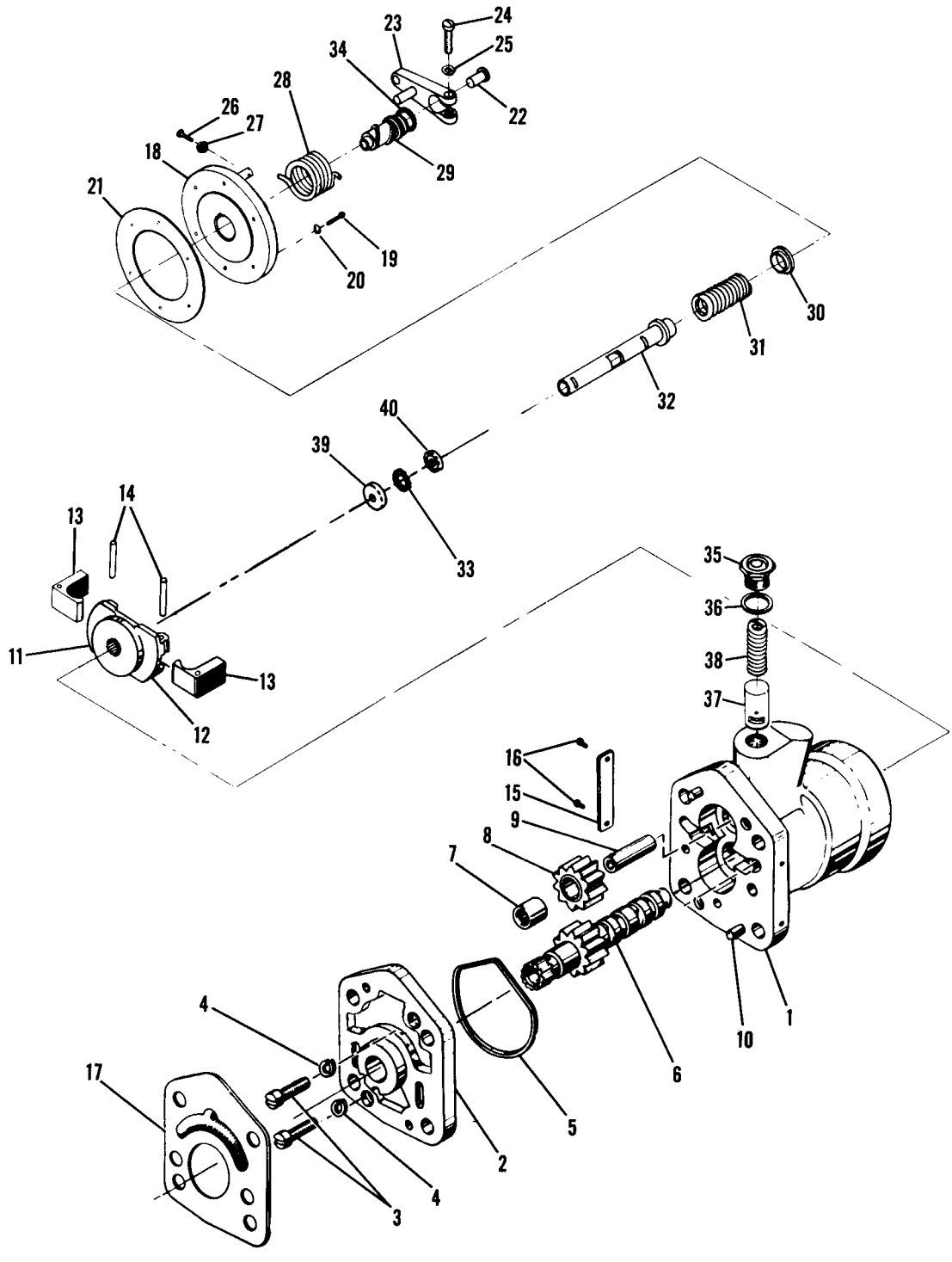

Figure 67. Propeller Governor Assembly - Alternate

FIGURE AND INDEX NO.	PART NUMBER	DESCRIPTION 1 2 3 4 5 6 7	UNITS PER ASSY	USABLE ON CODE
67 -	C161040-0103	GOVERNOR ASSY-PROPELLER ALTERNATE	1	
- 1	210253	BODY-GOVERNOR WGV	1	
- 2	213214	BASE-GOVERNOR WGV	1	
		ATTACHING PARTS		
- 3	189744	SCREW WGV	2	
- 4	218547	WASHER WGV	2	
- 5	206336	O RING WGV	1	
		---*---		
- 6	210396	GEAR-PUMP DRIVE WGV	1	
- 7	210036	BEARING-NEEDLE WGV	1	
- 8	204864	GEAR-PUMP IDLER WGV	1	
- 9	210031	STUD-IDLER GEAR WGV	1	
-10	210261	PIN-DOWELL WGV	2	
-11	210382	HEAD ASSY-FLY WEIGHT WGV	1	
-12	210393	HEAD-FLYWEIGHT WGV	1	
-13	196195	FLYWEIGHT WGV	1	
-14	214202	PIN-FLYWEIGHT WGV	1	
	210394	KEEPER WGV	1	
-15	193385	NAMEPLATE WGV	1	
		ATTACHING PARTS		
-16	189574	PIN-DRIVE WGV	2	
		---*---		
-17	MS100009	GASKET-MOUNTING	1	
-18	210399	COVER-GOVERNOR WGV	1	
		ATTACHING PARTS		
-19	189482	SCREW	4	
-20	189739	WASHER	4	
-21	206337	GASKET COVER WGV	1	
		---*---		
-22	210293	PLUG-SPEED ADJUSTMENT WGV	1	
-23	210039	LEVER ASSY-SPEED ADJUSTMENT WGV	1	
-24	188434	SCREW WGV	1	
-25	188141	WASHER WGV	1	
-26	218537	SCREW WGV	1	
-27	188302	NUT WGV	1	
-28	191869	SPRING-LEVER CONTROL WGV	1	
-29	213201	SHAFT AND WORM ASSY-SPEED ADJUSTMENT WGV	1	
-30	210326	SEAT-SPEEDER SPRING WGV	1	
-31	192709	SPRING-SPEEDER WGV	1	
-32	210398	PLUNGER ASSY-PILOT VALVE WGV	1	
-33	180231	BEARING-PILOT VALVE WGV	1	
-34	182747	O RING WGV	1	
-35	218446	PLUG-RELIEF VALVE WGV	1	
-36	186320	GASKET WGV	1	
-37	210257	PLUNGER-RELIEF VALVE WGV	1	
-38	192558	SPRING-RELIEF VALVE WGV	1	
-39	213200	RACE-PILOT VALVE BEARING LOWER WGV	1	
-40	210216	RACE-PILOT VALVE BEARING UPPER WGV	1	

Engine (Cont)

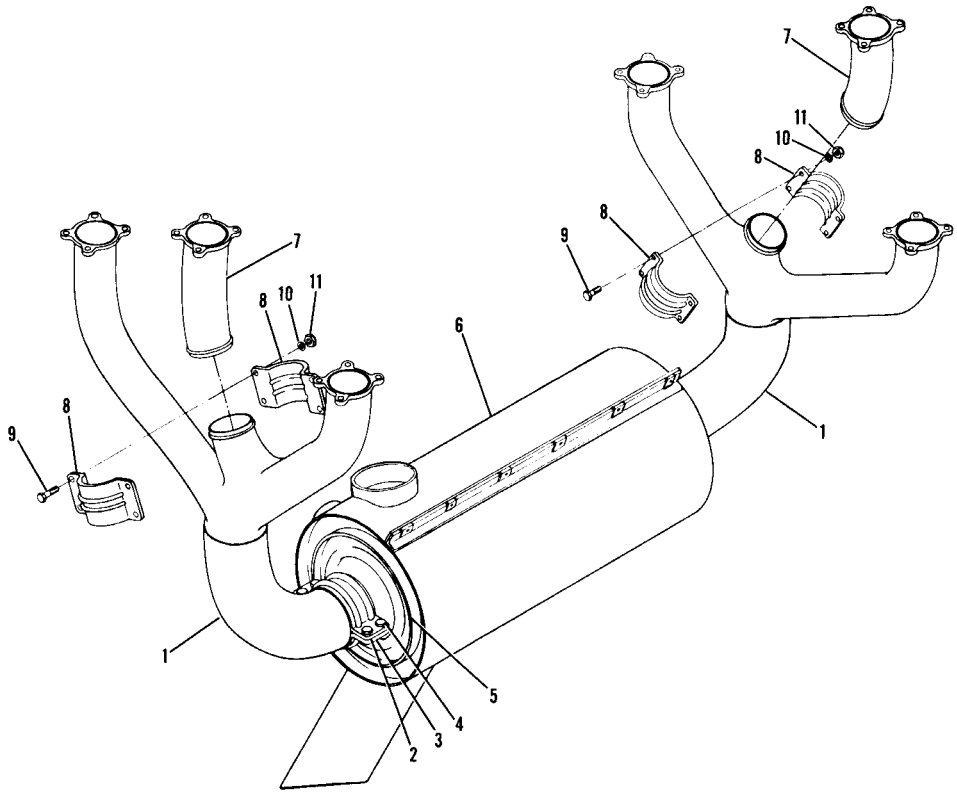

182 SERIAL 18262466 THRU 18264230

Figure 68. Engine Exhaust Assembly

FIGURE AND INDEX NO.	PART NUMBER	DESCRIPTION 1 2 3 4 5 6 7	UNITS PER ASSY	USABLE ON CODE
68 -	0750161-72	EXHAUST ASSEMBLY-ENGINE	1	
- 1	0750161-67	STACK ASSEMBLY-EXHAUST	2	
		ATTACHING PARTS		
- 2	0750161-24	CLAMP ASSEMBLY	1	
- 3	0750161-22	CLAMP	1	
- 4	AN3-4A	BOLT	4	
	MS21044N3	NUT	4	
		---*---		
- 5	0750161-61	MUFFLER WELD ASSEMBLY-EXHAUST	1	
- 6	0750161-58	SHROUD ASSEMBLY-EXHAUST MUFFLER	1	
		ATTACHING PARTS		
	S1021Z8-8	SCREW	6	
	NAS395-14-3	NUT	6	
		---*---		
- 7	0750161-36	PIPE ASSEMBLY-EXHAUST	2	
		ATTACHING PARTS		
- 8	0750161-25	CLAMP-HALF	2	
- 9	AN3-4A	BOLT	4	
-10	AN960-10	WASHER	4	
-11	MS21044N3	NUT	4	
		---*---		
		A---182 SERIAL 18262466 THRU 18264230		

Engine (Cont)

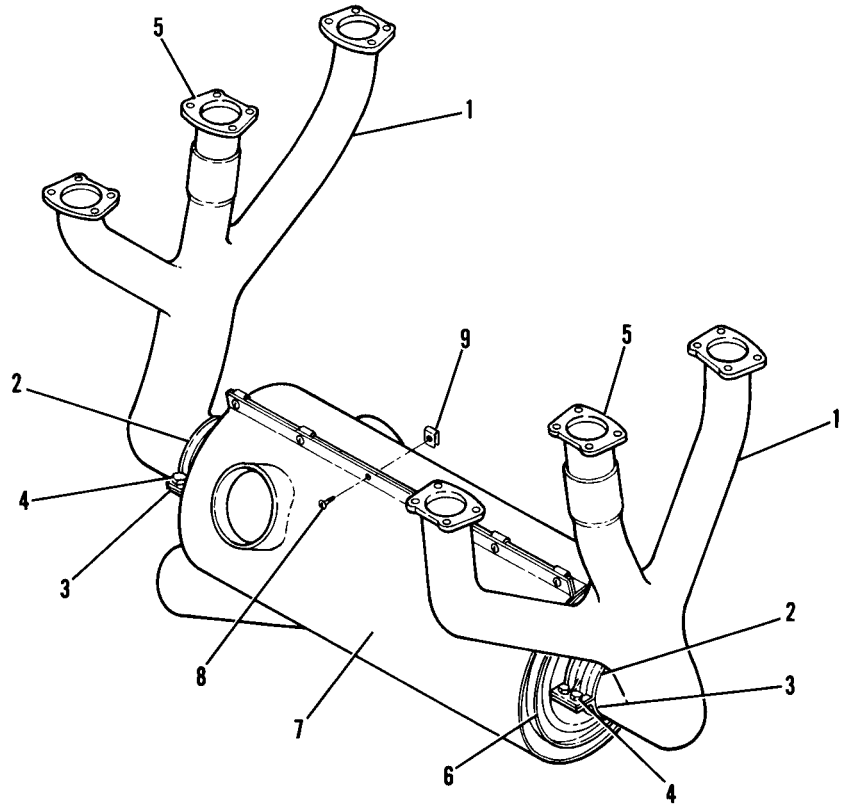

182 SERIAL 18264231 & ON

Figure 68A. Engine Exhaust Assembly

FIGURE AND INDEX NO.	PART NUMBER	DESCRIPTION 1 2 3 4 5 6 7	UNITS PER ASSY	USABLE ON CODE
68A-	0750238-1	EXHAUST ASSEMBLY-ENGINE	1	A
- 1	0750238-2	STACK ASSY-EXHAUST	2	
		ATTACHING PARTS		
- 2	0750161-24	CLAMP HALF	1	
- 3	0750161-22	CLAMP HALF	1	
- 4	AN3-4A	BOLT	4	
	AN960-10	WASHER	4	
	MS21045L3	NUT	4	
		---*---		
- 5	0750238-5	STACK ASSY-CENTER	2	
- 6	0750161-61	MUFFLER ASSEMBLY-EXHAUST	1	
- 7	0750161-58	SHROUD ASSY-EXHAUST MUFFLER	1	
		ATTACHING PARTS		
- 8	S1021Z8-8	SCREW	6	
- 9	NAS395-14-3	NUT	6	
		---*---		
		A---182 SERIAL 18264231 & ON		

Engine (Cont)

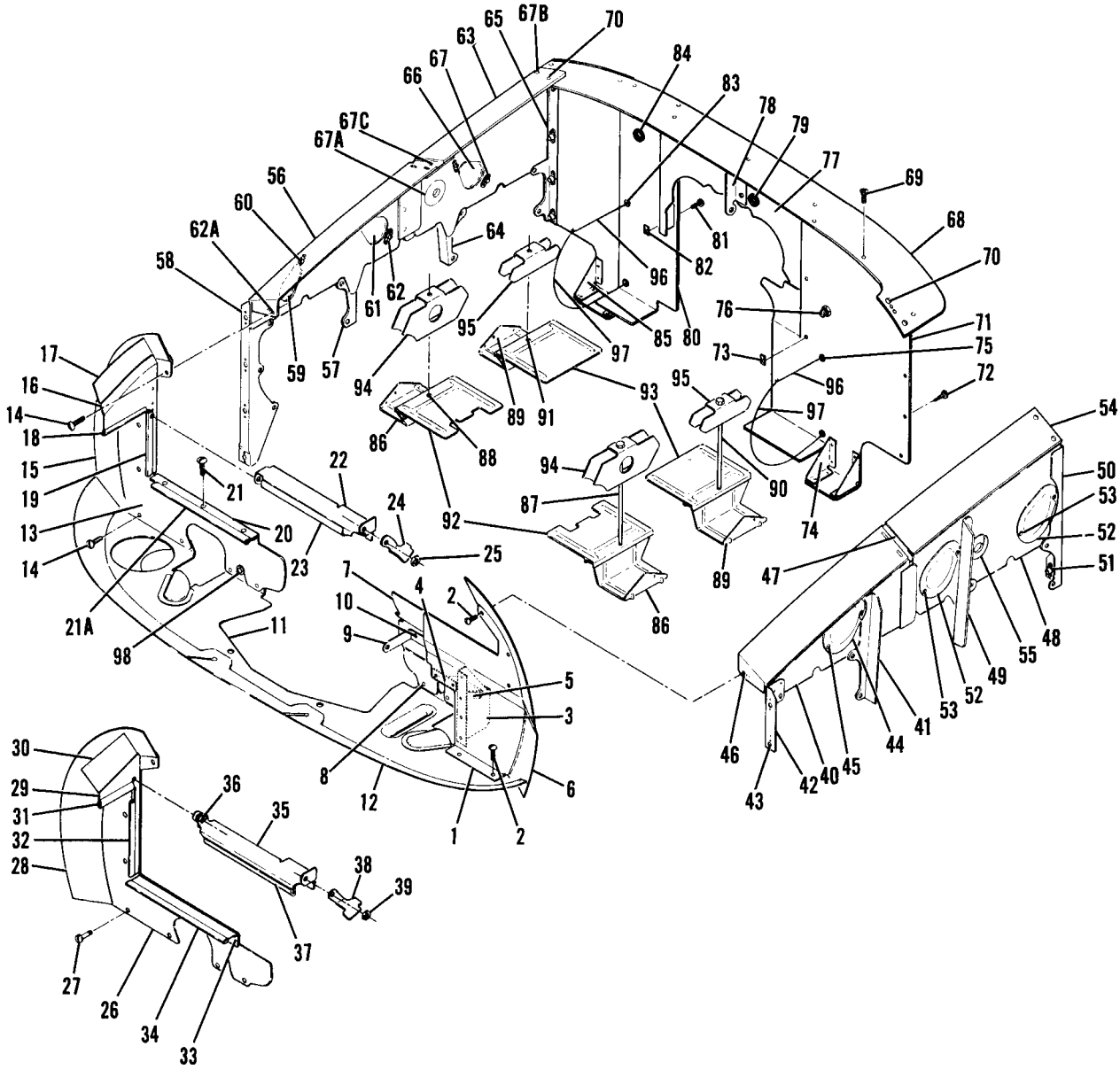

Figure 69. Engine Baffles Installation

FIGURE AND INDEX NO.	PART NUMBER	DESCRIPTION 1 2 3 4 5 6 7	UNITS PER ASSY	USABLE ON CODE
69 -		BAFFLES INSTALLATION-ENGINE	NP	
- 1	0755005-1	BAFFLE ASSY-FRONT LH	1	
		ATTACHING PARTS		
- 2	AN525-10R6	SCREW	5	
		---*---		
- 3	0755005-3	BAFFLE	1	
- 4	0755005-4	BAFFLE	1	
- 5	0755005-5	BRACKET	1	
- 6	0755005-6	SEAL	1	
- 7	0755007-1	BAFFLE ASSY-FWD LOWER LH	1	
		ATTACHING PARTS		
- 8	AN525-10R6	SCREW	2	
		---*---		
	NAS680A3	NUTPLATE	2	
- 9	1250966-3	BRACKET	1	
		ATTACHING PARTS		
-10	AN525-10R6	SCREW	2	
		---*---		
-11	0755001-21	BAFFLE ASSY-HORIZONTAL	1	
	NAS682A3	NUTPLATE	4	
	NAS684A3	NUTPLATE	1	
	NAS680A3	NUTPLATE	2	
-12	0755001-23	SEAL-HORIZONTAL	1	
-13	0755001-24	BAFFLE ASSY-FWD RH	1	
		ATTACHING PARTS		
-14	AN525-10R6	SCREW	8	
		---*---		
-15	0755001-25	SEAL-FWD RH	1	
	NAS680A3	NUTPLATE	3	
-16	0755001-28	BAFFLE-FWD RH TOP	1	
-17	0755001-27	SEAL	1	
-18	S202R0330B	CHANNEL	1	
-19	S202R0420B	CHANNEL	1	
-20	0755009-1	BAFFLE ASSY-FWD LOWER	1	
		ATTACHING PARTS		
-21	AN525-10R6	SCREW	3	
		---*---		
-21A	S202R0715B	MOLDING	1	
-22	0755010-1	BAFFLE ASSY-OIL COOLER UPPER AFT	1	
		ATTACHING PARTS		
	AN525-832R6	SCREW	1	
		---*---		
	NAS684A08	NUTPLATE	1	
-23	S202R0630B	CHANNEL	1	
-24	0750152-1	BAFFLE-OIL COOLER INBD	1	
-25	AN960-416L	WASHER	1	
-26	0755001-30	BAFFLE ASSY-FWD RH NON CONGEALING OIL COOLER	1	
		ATTACHING PARTS		
-27	AN525-10R6	SCREW	8	
		---*---		
	NAS680A08	NUTPLATE	2	
	NAS682A08	NUTPLATE	1	
-28	0755001-25	SEAL-RH FWD	1	
-29	0755012-1	BAFFLE ASSY-NON CONGEALING OIL COOLER	1	
-30	0755012-4	SEAL	1	
-31	S202R0265B	CHANNEL	1	
-32	S202R0485B	CHANNEL	1	
-33	0755012-2	BAFFLE ASSY	1	
		ATTACHING PARTS		
	AN525-832R6	SCREW	3	
		---*---		
-34	S202R0747B	CHANNEL	1	
-35	0755011-1	BAFFLE ASSY-NON CONGEALING OIL COOLER	1	
		ATTACHING PARTS		
	AN525-832R6	SCREW	1	
		---*---		
-36	NAS696A08	NUTPLATE	1	
-37	S202R0710B	CHANNEL	1	

CONTINUED ON NEXT PAGE

FIGURE AND INDEX NO.	PART NUMBER	DESCRIPTION 1 2 3 4 5 6 7	UNITS PER ASSY	USABLE ON CODE
69 -38	0750152-3	BAFFLE-NON CONGEALING OIL COOLER	1	
-39	AN960-416L	WASHER	1	
-40	0755040-1	BAFFLE ASSY-LH FWD VERTICAL	1	
-41	1250969-7	BRACKET-SIDE SUPPORT AFT	1	
-42	0755006-1	BRACKET ASSY-FWD SUPPORT	1	
-43	NAS682A3	NUTPLATE	1	
	NAS680A3	NUTPLATE	1	
-44	1250961-6	CUP	1	
		ATTACHING PARTS		
-45	AN525-832R8	SCREW	2	
	NAS680A08	NUTPLATE	2	
		---*---		
-46	NAS682A3	NUTPLATE	1	
-47	0755045-1	SEAL	1	
-48	0755040-3	BAFFLE ASSY-LH AFT VERTICAL	1	
-49	0755046-1	BRACKET-SIDE SUPPORT FWD	1	
-50	0755003-15	BRACKET ASSY-AFT SUPPORT	1	
	S1862-2	NUTPLATE	1	
-51	S1862-3	NUTPLATE	3	
-52	1250961-5	CUP	2	
		ATTACHING PARTS		
-53	AN525-832R8	SCREW	2	
	NAS680A08	NUTPLATE	2	
		---*---		
-54	NAS1067A08	NUTPLATE	1	
-55	MS35489-15S	GROMMET	1	
-56	0755040-2	BAFFLE ASSY-RH FWD VERTICAL	1	
-57	0755046-1	BRACKET-SIDE SUPPORT AFT	1	
-58	0755008-1	BRACKET ASSY-FWD SUPPORT	1	
	NAS680A3	NUTPLATE	3	
	NAS684A3	NUTPLATE	1	
-59	1250961-7	CUP	1	
		ATTACHING PARTS		
-60	AN525-832R6	SCREW	2	
	NAS682A08	NUTPLATE	1	
	NAS680A08	NUTPLATE	1	
		---*---		
-61	1250961-5	CUP	1	
		ATTACHING PARTS		
-62	AN525-832R8	SCREW	2	
	NAS680A08	NUTPLATE	2	
		---*---		
-62A	NAS682A3	NUTPLATE	1	
-63	0755040-4	BAFFLE ASSY-RH AFT VERTICAL	1	
-64	1250969-6	BRACKET-SIDE SUPPORT FWD	1	
-65	0755003-16	BRACKET ASSY-AFT SUPPORT		
	S1862-2	NUTPLATE	2	
	S1862-3	NUTPLATE	2	
-66	1250969-5	CUP	1	
		ATTACHING PARTS		
-67	AN525-832R8	SCREW	2	
	NAS680A08	NUTPLATE	2	
		---*---		
-67A	MS35489-15S	GROMMET	1	
-67B	NAS681A08	NUTPLATE	1	
-67C	0755045-1	SEAL	1	
-68	0755004-9	CAP ASSY	1	
		ATTACHING PARTS		
-69	AN507-832R6	SCREW	10	
		---*---		
-70	NAS683A08	NUTPLATE	2	
-71	0755004-3	BAFFLE ASSY-LH AFT	1	
		ATTACHING PARTS		
-72	S1021Z8-6	SCREW	7	
-73	NAS446-4-3	NUT	3	
		---*---		
-74	0750128-11	GUSSET	2	
-75	MS20230B20	GROMMET	2	
-76	AN832-2D	UNION	1	
	AN960D516	WASHER	1	
	AN924-2D	NUT	1	

CONTINUED ON NEXT PAGE

FIGURE AND INDEX NO.	PART NUMBER	DESCRIPTION 1 2 3 4 5 6 7	UNITS PER ASSY	USABLE ON CODE
69 -77	0755004-2	BAFFLE ASSY-CENTER AFT	1	
	NAS681A08	NUTPLATE	1	
	NAS683A08	NUTPLATE	2	
-78	0750117-21	BRACKET	1	
-79	MS35489-1185	GROMMET	1	
-80	0755004-6	BAFFLE ASSY-RH AFT	1	
		ATTACHING PARTS		
-81	S1021Z8-6	SCREW	7	
-82	NAS446-4-3	NUT	3	
		---*---		
-83	MS20230B20	GROMMET	2	
-84	MS35489-20S	GROMMET	1	
-85	0750128-11	GUSSET	2	
	NAS683A08	NUTPLATE	4	
-86	0750135-1	BAFFLE ASSY-INNER CYLINDER FWD	2	
		ATTACHING PARTS		
-87	AN3-67A	BOLT	1	
		---*---		
-88	NAS686A3	NUTPLATE	1	
-89	0750135-1	BAFFLE ASSY-INNER CYLINDER AFT	2	
		ATTACHING PARTS		
-90	AN3-60A	BOLT	1	
		---*---		
-91	NAS686A3	NUTPLATE	1	
-92	0750135-3	BAFFLE-INNER CYLINDER FWD	2	
-93	0750135-4	BAFFLE-INNER CYLINDER AFT	2	
-94	0851700-96	SUPPORT-FWD BAFFLE	2	
-95	0750117-31	SUPPORT-AFT BAFFLE	2	
-96	0450277-3	FASTENER-REAR BAFFLE TO CYLINDER UPPER	2	
-97	0450277-2	FASTENER-REAR BAFFLE TO CYLINDER LOWER	2	
-98	MS35489-7S	GROMMET	1	

Cowl Flaps Control System

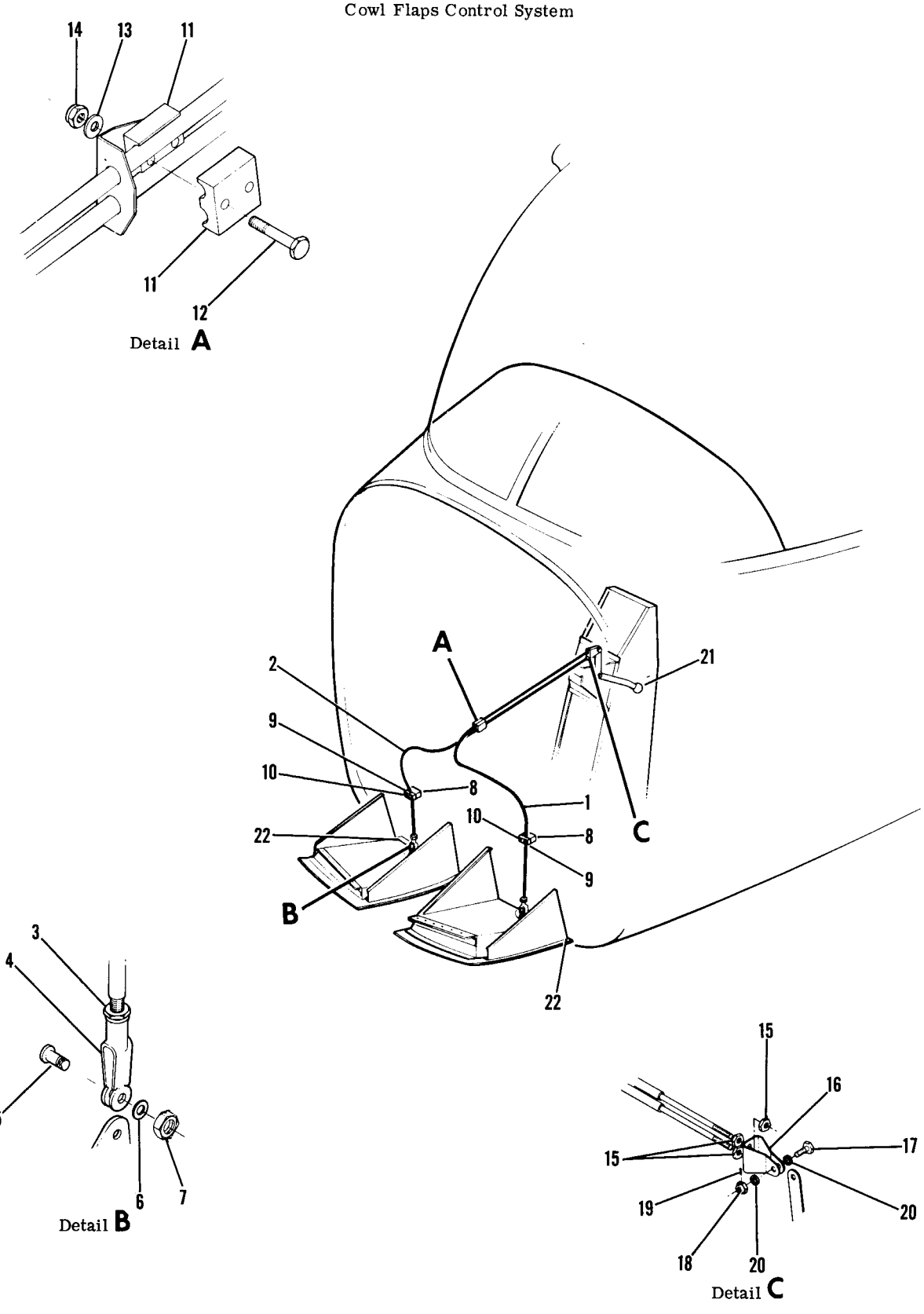

Figure 70. Cowl Flaps Control System Installation

FIGURE AND INDEX NO.	PART NUMBER	DESCRIPTION 1 2 3 4 5 6 7	UNITS PER ASSY	USABLE ON CODE
70 -		COWL FLAPS CONTROL SYSTEM INSTALLATION	NP	
- 1	S1244-3	CONTROL-COWL FLAP LH	1	
- 2	S1244-4	CONTROL-COWL FLAP RH	1	
- 3	AN316-4	NUT	2	
- 4	1213079-1	CLEVIS	2	
		ATTACHING PARTS		
- 5	AN3-10A	BOLT	1	
- 6	AN960-10L	WASHER	2	
		DELETED		
- 7	MS21044N3	NUT	1	
		---*---		
- 8	0713307-1	MOUNT	2	
- 9	0713307-2	CLAMP	2	
		ATTACHING PARTS		
-10	AN520-10R26	SCREW	2	
	AN960-10L	WASHER	2	
	MS21044N3	NUT	2	
		---*---		
-11	1213037-1	CLAMP	2	
		ATTACHING PARTS		
-12	AN3-11A	BOLT	1	
-13	AN960-10L	WASHER	1	
-14	MS21044N3	NUT	1	
		---*---		
-15	AN316-4R	NUT	4	
-16	0713701-2	CLEVIS	1	
		ATTACHING PARTS		
-17	AN4-5	BOLT	1	
-18	AN310-4	NUT	1	
-19	MS24665-134	PIN-COTTER	1	
-20	AN960-416L	WASHER	2	
		---*---		
-21	SEE FIG 75	CONSOLE INSTALLATION	1	
-22	S1929-1	BUMPER AUV	2	

Winterization (Cont)

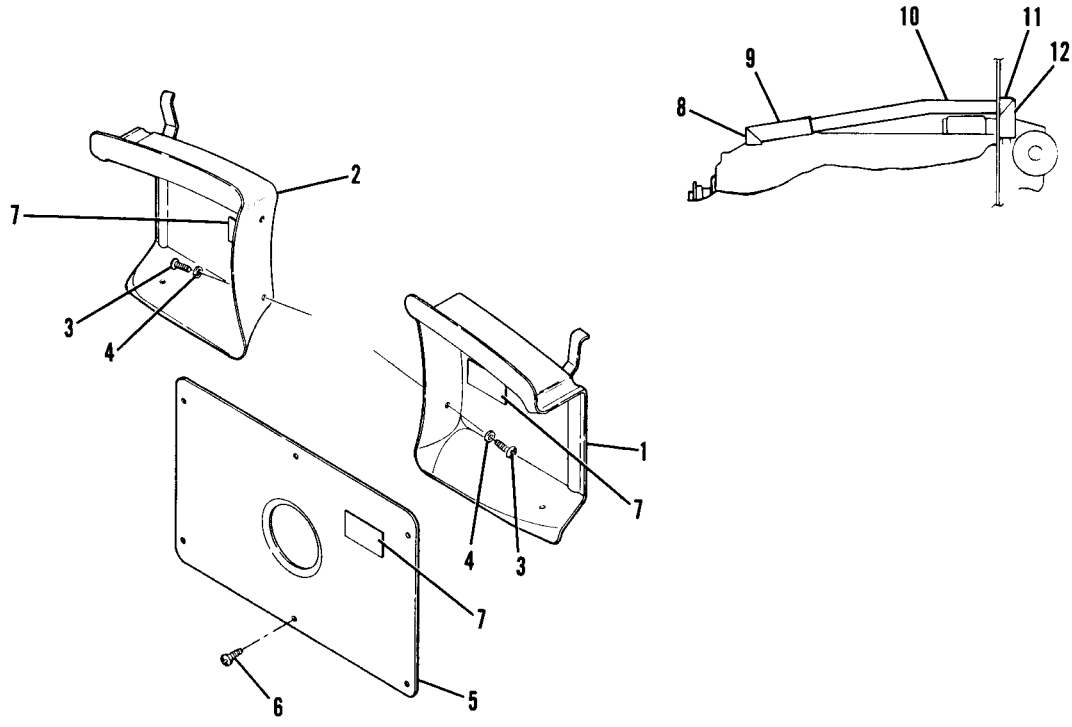

Figure 71. Winterization Equipment Installation

FIGURE AND INDEX NO.	PART NUMBER	DESCRIPTION 1 2 3 4 5 6 7	UNITS PER ASSY	USABLE ON CODE
71 -		WINTERIZATION EQUIPMENT INSTALLATION	NP	A
- 1	0752647-5	COVER-WINTER FRONT LH	1	B
	0752647-9	COVER-WINTER FRONT LH	1	C
- 2	0752647-6	COVER-WINTER FRONT RH	1	B
	0752647-10	COVER-WINTER FRONT RH	1	C
		ATTACHING PARTS		
- 3	AN520-10R10	SCREW	3	
- 4	AN960-10L	WASHER	3	
	NAS680A3	NUT	3	
		---*---		
- 5	0752641-7	COVER ASSY-FILTER	1	B
	0752641-1	COVER ASSY-FILTER	1	C
		ATTACHING PARTS		
- 6	AN509-10R8	SCREW	6	
		---*---		
- 7	SEE FIG 2	PLACARD-WINTERIZATION	3	
- 8	1200191-4	TUBE-WINTERIZATION	1	
- 9	1200191-5	TUBE-WINTERIZATION	1	
-10	1200191-6	TUBE-WINTERIZATION	1	
-11	1200191-7	TUBE-WINTERIZATION	1	
-12	1200191-8	TUBE-WINTERIZATION	1	
		A---182 SERIAL 18262466 & ON		
		B---182 SERIAL 18262466 THRU 18263475		
		C---182 SERIAL 18263476 & ON		

This page intentionally left blank.

Ventilation System (Cont)

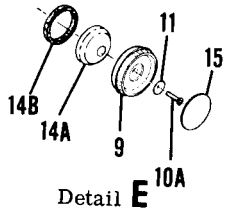

Detail E

18263476 & ON

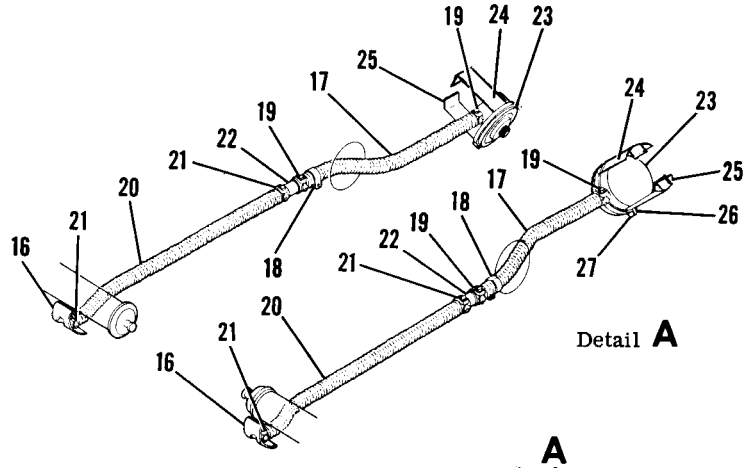

Detail A

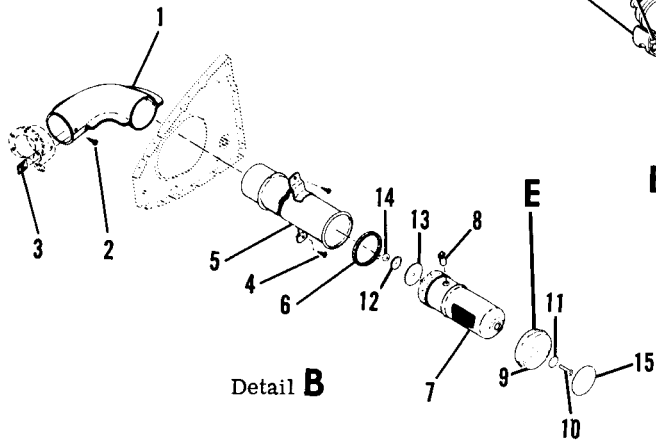

Detail B

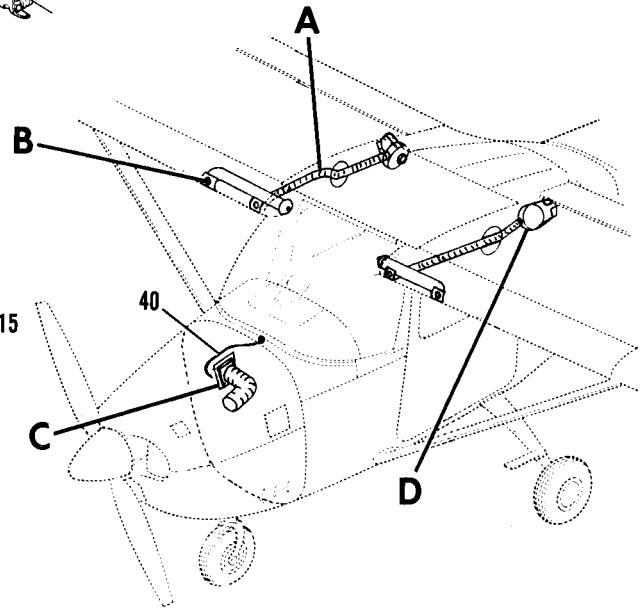

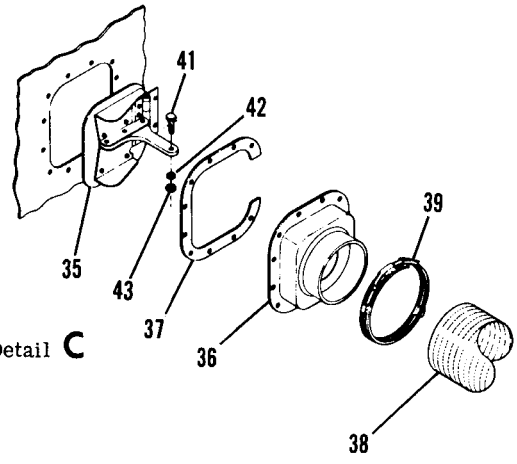

Detail C

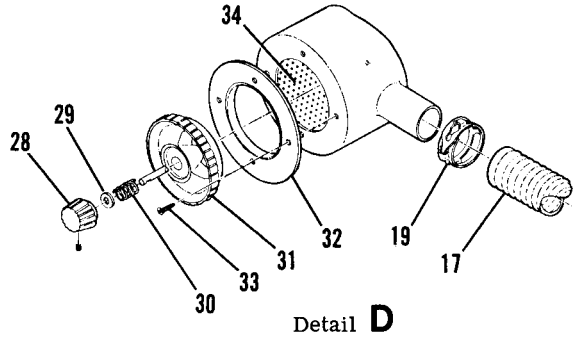

Detail D

182 SERIAL 18262466 THRU 18264295

Figure 72. Cabin Ventilation System

FIGURE AND INDEX NO.	PART NUMBER	DESCRIPTION 1 2 3 4 5 6 7	UNITS PER ASSY	USABLE ON CODE
72 -		CABIN VENTILATION SYSTEM	NP	A
- 1	0450314	FITTING-CABIN VENTILATION	2	
		ATTACHING PARTS		
- 2	S1021Z8-8	SCREW	1	
- 3	NAS446-4-3	NUT	1	
		---*---		
	0413163-204	OUTLET ASSY-RH	1	B
	0413163-46	OUTLET ASSY-RH	1	C
	0413163-203	OUTLET ASSY-LH	1	B
	0413163-45	OUTLET ASSY-LH	1	C
		ATTACHING PARTS		
- 4	S1021Z8-6	SCREW	2	
		---*---		
- 5	0413163-28	TUBE ASSY-RH	1	
	0413163-27	TUBE ASSY-LH	1	
- 6	0413163-7	SEAL-FELT	1	
- 7	0413163-18	OUTLET-CABIN VENTILATION	1	
- 8	S2024-1	CATCH-BULLET	2	
- 9	S1834-1	KNOB	2	
		ATTACHING PARTS		
-10	AN507-1032R12	SCREW	1	B
-10A	AN507-1032R14	SCREW	1	C
-11	S290D1032	WASHER	1	
-12	0413228	WASHER	1	
-13	S1450-5A24-040	WASHER	1	
-14	MS21044N3	NUT	1	
		---*---		
-14A	0713536-1	CAP ASSY-AIR VENT	1	C
-14B	S1441-2	SEAL	1	C
-15	S1780-8	INSERT	2	
		REAR SEAT VENTS INSTALLATION	NP	
-16	1200637-2	SCOOP-AIR	2	
-17	S1053E8T	HOSE-12.00 IN LG BKI REF S1053E8T12.00	2	
		ATTACHING PARTS		
-18	S1485D17U	CLAMP	1	
	S1021Z8-10	SCREW	1	
-19	S1693-2	CLAMP	2	
		---*---		
-20	S1053E10T	HOSE-31.00 IN LG BKI REF S1053E10T31.00	2	
		ATTACHING PARTS		
-21	S1693	CLAMP	2	
		---*---		
-22	1200691-1	TUBE-AIR DUCT DRAIN	2	
-23	0710013-4	SILENCER ASSY-AIR VENT	2	
		ATTACHING PARTS		
-24	0513420-3	BRACKET	1	
-25	0710014-15	BRACKET	1	
-26	0710014-12	CLAMP	1	
-27	AN515-8-10	SCREW	1	
	AN960-8	WASHER	1	
	MS21044N06	NUT	1	
		---*---		
-28	S1728-1	KNOB-SILENCER	1	
-29	AN960-10L	WASHER	1	
-30	0710015-13	SPRING-SILENCER	1	
-31	0713250-1	KNOB-SILENCER	1	
-32	0710014-8	ESCUTCHEON-SILENCER	1	
		ATTACHING PARTS		
-33	S1023A6-6C	SCREW	4	
		---*---		
-34	0710015-6	INSULATOR	1	

CONTINUED ON NEXT PAGE

FIGURE AND INDEX NO.	PART NUMBER	1 2 3 4 5 6 7 DESCRIPTION	UNITS PER ASSY	USABLE ON CODE
72 -		OUTSIDE AIR VENT INSTALLATION-FORWARD	NP	
-35	0713135	DOOR ASSY-AIR VENT	1	
-36	0713139	INLET ASSY-AIR VENT	1	
-37	0713140-1	SEAL-AIR VENT	1	
-38	S1053E24T	HOSE-14.00 IN LG BKI REF S1053E24T14.00	1	
		ATTACHING PARTS		
-39	NAS398-50	CLAMP	2	
		---*---		
-40	SEE NOTE*	CONTROL ASSY-FORWARD AIRVENT	1	
		ATTACHING PARTS		
-41	0450311-5	CLAMP	1	
-42	AN960-10L	WASHER	1	
-43	MS21044N3	NUT	1	
		---*---		
		NOTE. *REFER TO INSTRUMENT PANEL FIGURE.		
		A---182 SERIAL 18262466 THRU 18264295		
		B---182 SERIAL 18262466 THRU 18263475		
		C---182 SERIAL 18263476 THRU 18264295		

FIGURE AND INDEX NO.	PART NUMBER	DESCRIPTION 1 2 3 4 5 6 7	UNITS PER ASSY	USABLE ON CODE
72A-		CABIN VENTILATION SYSTEM	NP	A
		OUTSIDE AIR VENT INSTALLATION-FWD	NP	
- 1	0713135	DOOR ASSY-AIR VENT	1	
- 2	0713139	INLET ASSY-AIR VENT	1	
- 3	0713140-1	SEAL-AIRVENT	1	
- 4	S1053E24T	HOSE-14.00 IN LG BKI REF S1053E24T14.00		
		ATTACHING PARTS		
- 5	NAS398-50	CLAMP	2	
		---*---		
- 6	SEE NOTE *	CONTROL ASSY-FORWARD AIRVENT	1	
		ATTACHING PARTS		
- 7	0450311-5	CLAMP	1	
- 8	AN960-10L	WASHER	1	
- 9	MS21044N3	NUT	1	
		---*---		
		REAR SEAT VENTS INSTALLTION	NP	
-10	1200637-2	SCOOP-AIR	2	
-11	S1053E10T	HOSE-26.00 IN LG BKI REF S1053E10T 26.00 IN LG	2	
		ATTACHING PARTS		
-12	S1891-20	CLAMP	1	
-13	S1485D20U	CLAMP	1	
	S1021Z10-10	SCREW	1	
		---*---		
-14	1200691-1	DRAIN FITTING-REAR SEAT VENT	2	
		ATTACHING PARTS		
-15	S2209-2	TIE	2	
		---*---		
-16	S1053E8T	HOSE-27.00 IN LG BKI S1053E8T 27. IN LG	2	
		ATTACHING PARTS		
-17	S1485D16U	CLAMP	2	
	S1021Z10-10	SCREW	2	
		---*---		
-18	0711830-1	ELBOW ASSY-LH	1	
-19	0711830-2	ELBOW ASSY-RH	1	
		ATTACHING PARTS		
-20	S2209-2	TIE	2	
		---*---		
-21	MS35489-23	GROMMET	2	
-22	0711829-1	BRACKET ASSY-LH	1	
-23	0711829-2	BRACKET ASSY-RH	1	
		ATTACHING PARTS		
	AN520-8R6	SCREW	2	
		---*---		
	NAS395-14-3	NUT	3	
-24	0711828-1	BRACKET ASSY-LH	1	
-25	0711828-2	BRACKET ASSY-RH	1	
		ATTACHING PARTS		
	AN520-8R6	SCREW	2	
		---*---		
	NAS696A08	NUTPLATE	2	
	NAS395-14-3	NUT	3	
	0715068-1 ¤	ESCUTCHEON-REAR AIR VENT LH	1	
	0715068-2 ¤	ESCUTCHEON-REAR AIR VENT RH	1	
		ATTACHING PARTS		
	S1022Z8-8C	SCREW	4	
		---*---		
-26	1210112-29	VALVE ASSY-FRESH AIR	2	
		ATTACHING PARTS		
	S1022Z8-6	SCREW	6	
		---*---		
-27	1210112-4	WHEEL-FRESH AIR VALVE	1	
		ATTACHING PARTS		
-28	S1021A6-8	SCREW	1	
-29	S1450-1A8-032	WASHER	1	
		---*---		
-30	1210112-22	TUBE ASSY-OUTER	1	

CONTINUED ON NEXT PAGE

Ventilation System (Cont)

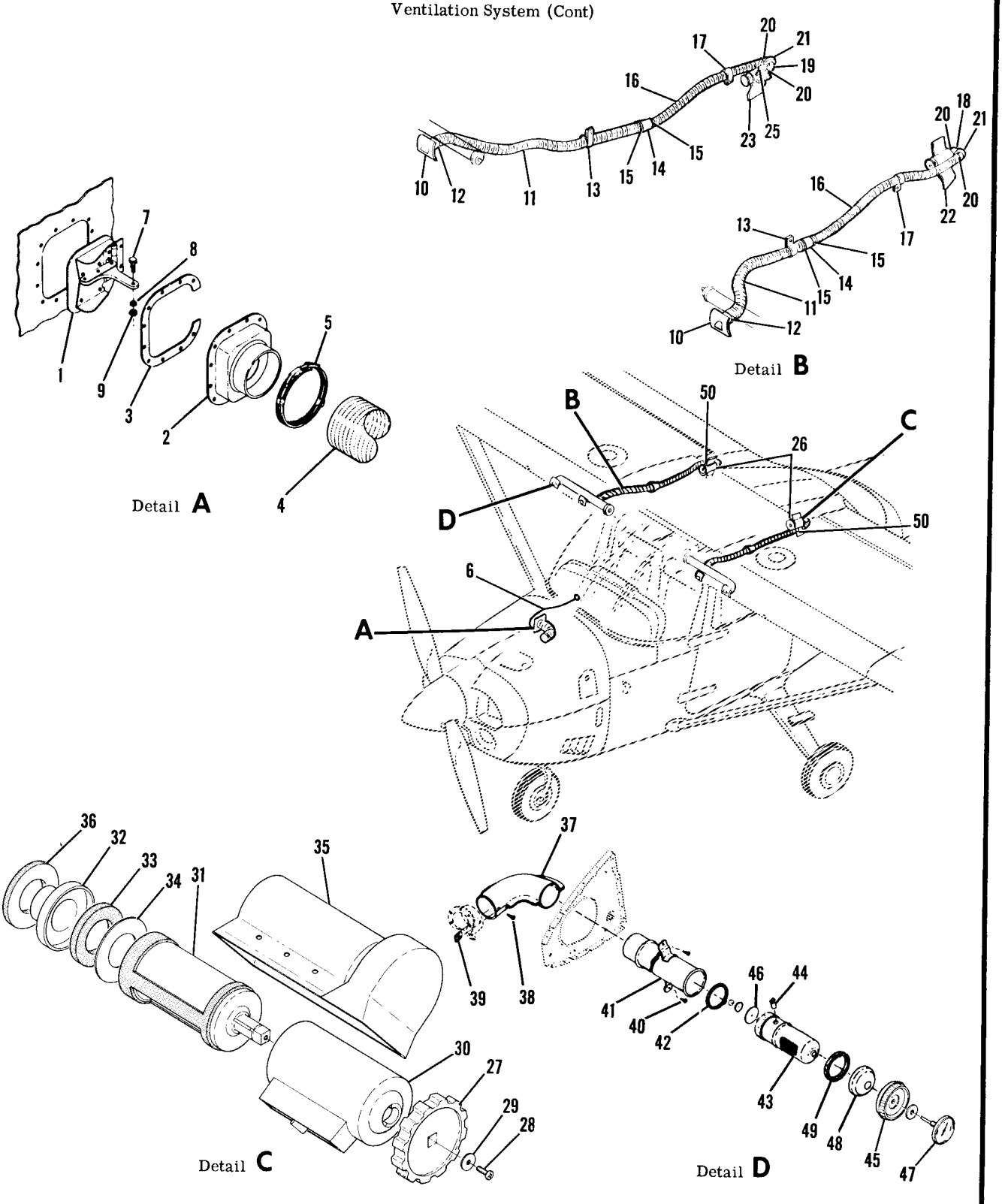

182 SERIAL 18264296 & ON

Figure 72A. Cabin Ventilation System

FIGURE AND INDEX NO.	PART NUMBER	DESCRIPTION 1 2 3 4 5 6 7	UNITS PER ASSY	USABLE ON CODE
72A-31	1210112-23	TUBE ASSY-INNER	1	
-32	1210112-13	CONNECTOR ASSY	1	
-33	1210112-11	SEAL	1	
-34	1210112-28	SEAL	1	
-35	0711848-1	HOUSING	1	
-36	0711848-2	SEAL	1	
-37	0450314	FITTING-CABIN VENTILATION FORWARD	2	
		ATTACHING PARTS		
-38	S1021Z8-8	SCREW	1	
-39	NAS446-4-3	NUT	1	
		---*---		
	0413163-45	OUTLET ASSY-LH	1	
	0413163-46	OUTLET ASSY-RH	1	
		ATTACHING PARTS		
-40	S1021Z8-6	SCREW	2	
		---*---		
-41	0413163-28	TUBE ASSY-RH	1	
	0413163-27	TUBE ASSY-LH	1	
-42	0413163-7	SEAL-FELT	1	
-43	0413163-18	OUTLET-CABIN VENTILATION	1	
-44	S2024-1	CATCH-BULLET	2	
-45	S1834-1	KNOB	2	
-46	S1450-5A24-040	WASHER	1	
-47	C668507-0101	GAGE-OUTSIDE AIR TEMPERATURE	1	
-48	0713536-1	CAP ASSY-AIR VENT	1	
-49	S1441-2	SEAL	1	
-50	S2195-2	TRIM-2.60 IN LG BKI REF S2195-2-2.60 IN LG	2	

NOTE. *REFER TO INSTRUMENT PANEL FIGURE.

NOTE. ¤THIS PART NUMBER MUST HAVE A SECOND DASH NUMBER ADDED TO DENOTE COLOR. REFER TO HOW TO ORDER INTERIOR PARTS-PAGE VII.

A---182 SERIAL 18264296 & ON

Heating System

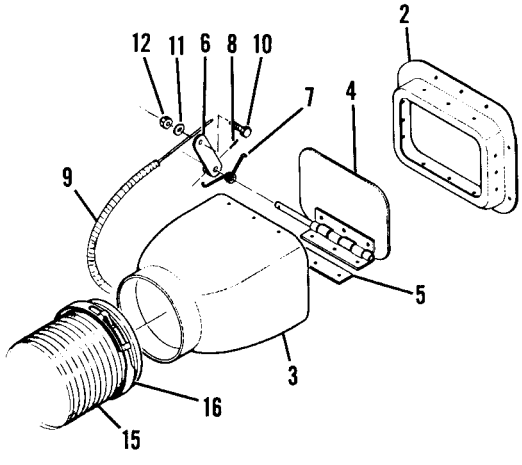

Detail **A**

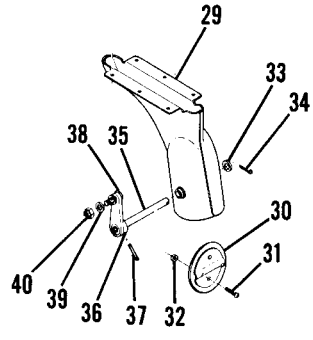

Detail **B**

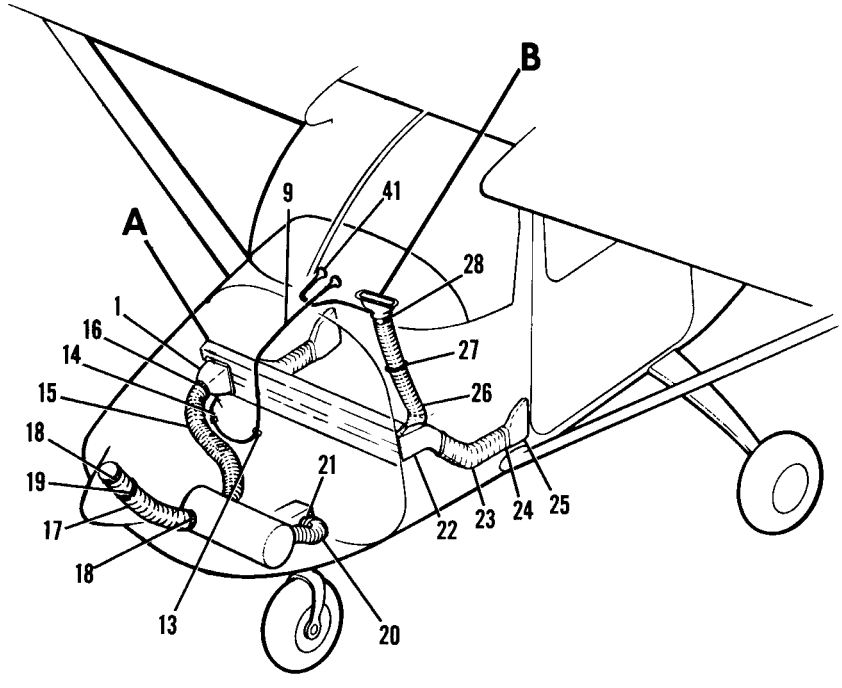

Figure 73. Cabin Heating & Defrosting System

FIGURE AND INDEX NO.	PART NUMBER	DESCRIPTION 1 2 3 4 5 6 7	UNITS PER ASSY	USABLE ON CODE
73 -		CABIN HEATING & DEFROSTING SYSTEM	NP	
- 1	0753011-1	VALVE ASSY-WARM AIR	1	
- 2	0753010-1	SEAT-WARM AIR VALVE	1	
- 3	1253032-1	BODY ASSY-VALVE	1	
- 4	1253034-1	VALVE PLATE ASSY	1	
- 5	1253040-1	SHIM	1	
	1253033-2	REINFORCEMENT	1	
- 6	1253037-1	ARM-CONTROL	1	
		ATTACHING PARTS		
- 7	1253041-1	SPRING	1	
- 8	NAS561C2-8	ROLL PIN	1	
		---*---		
- 9	S1241-37	CONTROL ASSY-CABIN HEAT	1	
		ATTACHING PARTS		
-10	0450311-5	CLAMP	1	
-11	AN960-10L	WASHER	1	
-12	MS21044N3	SCREW	1	
-13	MS21919DG3	CLAMP	1	
	NAS43DD3-28	SPACER INSTALLED BETWEEN CLAMP & FIREWALL	1	
	S1021Z8-14	SCREW	1	
-14	MS21919DG3	CLAMP	1	
	NAS43DD3-36	SPACER INSTALLED BETWEEN CLAMP & SHOCK MOUNT	1	
	AN515-8R14	SCREW	1	
		---*---		
-15	S1053E24T	HOSE-25.50 IN LG BKI REF S1053E24T25.50	1	
		ATTACHING PARTS		
-16	NAS398-50	CLAMP	2	
		---*---		
-17	S1053K24T	HOSE-16.0 IN LG BKI REF S1053K24T16.0	1	
		ATTACHING PARTS		
-18	NAS398-50	CLAMP	2	
-19	AN742D50	CLAMP	1	
	AN742D36	CLAMP	1	
	S1021Z10-8	SCREW	1	
	NAS488-10	NUT	1	
		---*---		
-20	S1053K20T	HOSE-26.0 IN LG BKI REF S1053K20T26.0	1	
		ATTACHING PARTS		
-21	NAS398-42	CLAMP	2	
		---*---		
-22	0713719-1	ADAPTER-HEATER DUCT LH	1	
	0713719-2	ADAPTER-HEATER DUCT RH	1	
-23	S1110ET	DUCT-19.5 IN LG BKI REF S1110ET19.50	2	
		ATTACHING PARTS		
-24	S2209-3	STA STRAP	2	
		---*---		
-25	1250503-1	DUCT-HOT AIR OUTLET LH	1	
	1250503-2	DUCT-HOT AIR OUTLET RH	1	
-26	S1053E16T	HOSE-24.0 IN LG BKI REF S1053E16T	1	
		ATTACHING PARTS		
-27	AN742D32	CLAMP	1	
	S1021Z8-6	SCREW	1	
	NAS446-4-1	NUT	1	
-28	NAS397-32	CLAMP	2	
		---*---		
-29	0713952-1	NOZZLE ASSY-DEFROST	1	
-30	1250116-1	VALVE ASSY-DEFROST	1	
		ATTACHING PARTS		
-31	AN515-6R10	SCREW	2	
-32	NAS696A06LK	NUT	2	
		---*---		
	1250115-3	LEVER ASSY-VALVE	1	
		ATTACHING PARTS		
-33	AN960-416L	WASHER	1	
-34	MS24665-132	COTTER PIN	1	
		---*---		
-35	1250115-2	SHAFT	1	
-36	0713019-24	ARM ASSY	1	
-37	MS16562-16	ROLL PIN	1	
-38	0450311	CLAMP	1	
-39	AN960-10L	WASHER	1	
-40	MS21044N3	NUT	1	
-41	SEE FIG 55	CONTROL ASSY-DEFROST	1	

Brake System (Cont)

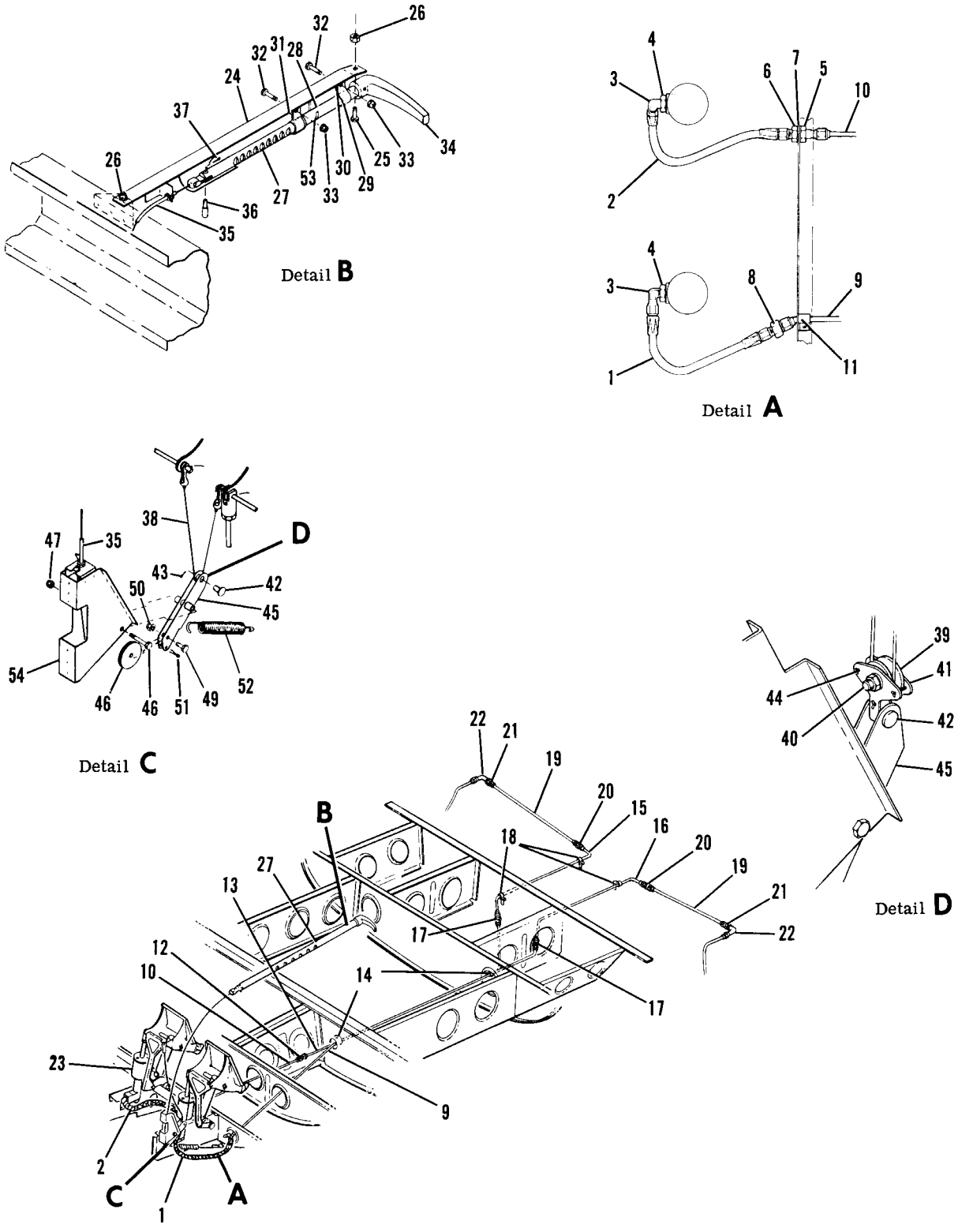

Figure 74. Brake System Installation

FIGURE AND INDEX NO.	PART NUMBER	DESCRIPTION 1 2 3 4 5 6 7	UNITS PER ASSY	USABLE ON CODE
74 -		BRAKE SYSTEM INSTALLATION	NP	
- 1	S2178C3-0083	HOSE ASSY-BRAKE LINE LH	1	
- 2	S2178-3-0074	HOSE ASSY-BRAKE LINE RH	1	
		ATTACHING PARTS		
- 3	AN921-3D	ELBOW	1	
- 4	AN924-3D	NUT	1	
	MS28778-3	PACKING	1	
		---*---		
- 5	AN924-3D	NUT	1	
- 6	AN832-3D	UNION	1	
- 7	AN960PD616	WASHER	2	
- 8	0782001-1	ADAPTER	1	
- 9	0700099-99	LINE ASSY LH-BRAKE	1	
-10	0700099-98	LINE ASSY RH-BRAKE	1	
-11	MS21919DG3	CLAMP	1	
	S1021Z8-6	SCREW	1	
	NAS446-4-3	NUTPLATE	1	
	0713272-1	BRACKET	1	
-12	AN815-3D	UNION	1	
-13	0700099-86	LINE ASSY-BRAKE	1	
-14	S1486DG4U	CLAMP	2	
	MS21919DG4	CLAMP	2	
	S1021Z8-10	SCREW	2	
	0713272-1	BRACKET	2	
-15	0700099-88	LINE ASSY RH-BRAKE	1	
-16	0700099-89	LINE ASSY LH-BRAKE	1	
		ATTACHING PARTS		
-17	AN815-3D	UNION	1	
		---*---		
-18	S1486DG4L	CLAMP	3	
	S1021Z8-10	SCREW	3	
	AN743-12	BRACKET-SUPPORT CLAMP	3	
		ATTACHING PARTS		
	AN515-6R8	SCREW	1	
	AN960-6L	WASHER	1	
	MS21045L06	NUT	1	
		---*---		
-19	0700099-90	LINE ASSY-BRAKE	2	
		ATTACHING PARTS		
-20	AN815-3D	UNION	1	
-21	AN924-3D	NUT	1	
	AN960PP616	WASHER	2	
-22	AN833-3D	ELBOW	1	
		---*---		
-23	SEE FIG 77	MASTER CYLINDER INSTALLATION	1	
		PARKING BRAKE INSTALLATION	NP	
-24	0713693-2	SUPPORT ASSY-PARKING BRAKE	1	
		ATTACHING PARTS		
-25	AN3-3A	BOLT	2	
-26	MS21044N3	NUT	2	
		---*---		
-27	0813150-55	HANDLE ASSY-PARKING BRAKE	1	
		ATTACHING PARTS		
-28	0813156-4	HOUSING ASSY-BRAKE	1	
-29	0713070-25	CLAMP	2	
-30	0713070-32	SPACER	1	
-31	0713070-15	SPACER	1	
-32	AN3-6A	BOLT	2	
-33	MS21044N3	NUT	2	
		---*---		
-34	0811490-6	HANDLE-PARKING BRAKE	1	
	0813150-54	TUBE-PARKING BRAKE	1	
	NAS561-5-12	ROLL PIN EN	1	

CONTINUED ON NEXT PAGE

FIGURE AND INDEX NO.	PART NUMBER	DESCRIPTION 1 2 3 4 5 6 7	UNITS PER ASSY	USABLE ON CODE
74 -35	0713693-3	CABLE ASSY	1	
	0713693-4	CABLE ASSY STAINLESS STEEL	1	
		ATTACHING PARTS		
-36	0713070-6	POSITIONING ARM	1	
-37	MS24665-132	COTTER PIN	1	
		---*---		
-38	0510105-233	CABLE	1	
-39	S1710-1	PULLEY	1	
		ATTACHING PARTS		
-40	AN3-6A	BOLT	1	
	0411783	BUSHING	1	
	AN960-10L	WASHER	1	
	MS21044N3	NUT	1	
		---*---		
-41	0713959-1	BRACKET ASSY	1	
		ATTACHING PARTS		
-42	MS20392-4C13	PIN	1	
-43	MS24665-281	COTTER PIN	1	
		---*---		
-44	MS24665-134	COTTER PIN	1	
-45	0713070-9	BELLCRANK ASSY	1	
		ATTACHING PARTS		
-46	AN3-13A	BOLT	1	
	0713070-19	SPACER	1	
-47	MS21044N3	NUT	1	
		---*---		
-48	S378-1L	PULLEY	1	
		ATTACHING PARTS		
-49	AN3-5A	BOLT	1	
-50	MS21044N3	NUT	1	
		---*---		
-51	MS24665-132	COTTER PIN	1	
-52	0713625-1	SPRING	1	
-53	0713070-24	CATCH	1	
-54	0713070-20	BRACKET-PARKING BRAKE CONTROL	1	

This page intentionally left blank.

Controls Pedals

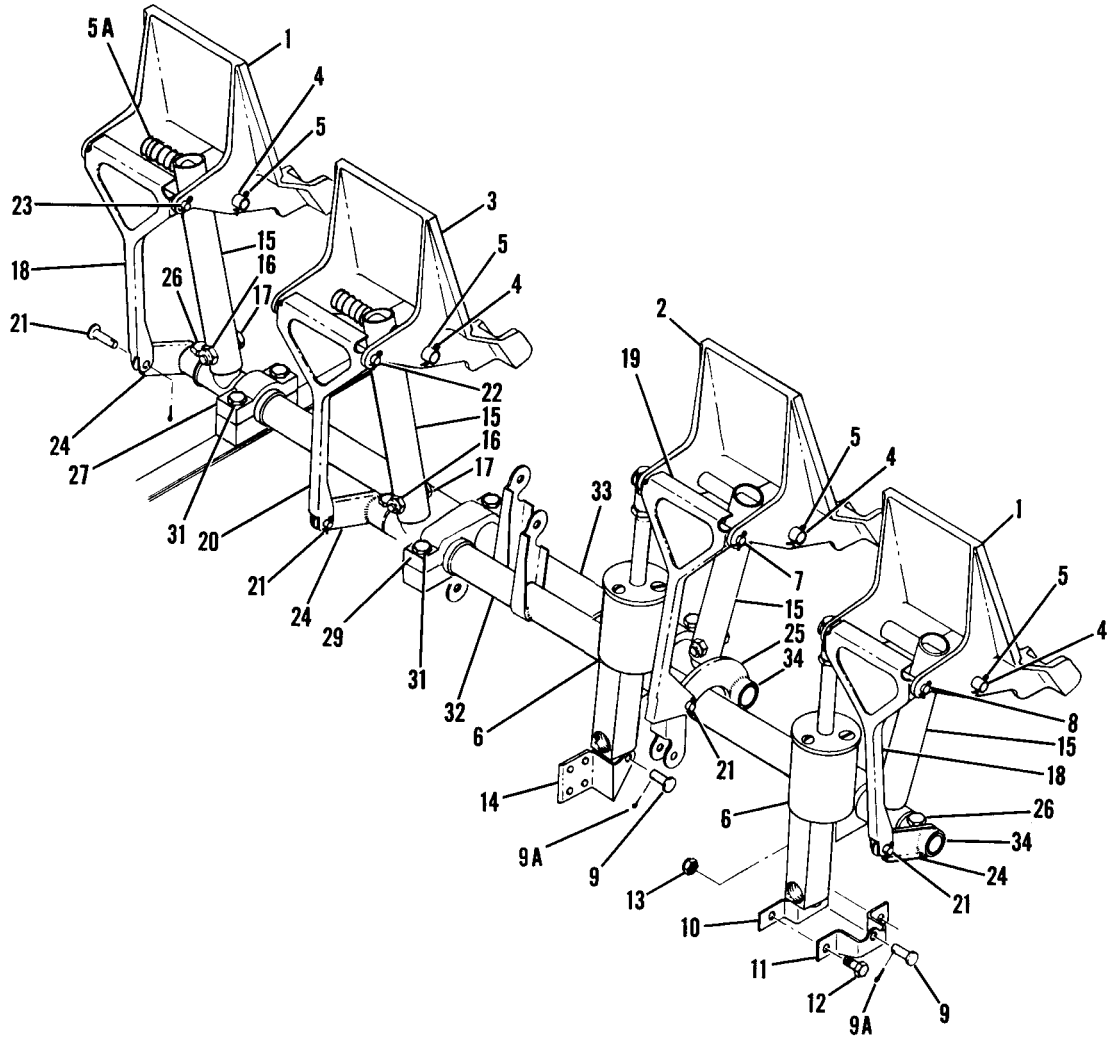

Figure 75. Brake & Rudder Pedals Installation

FIGURE AND INDEX NO.	PART NUMBER	DESCRIPTION 1 2 3 4 5 6 7	UNITS PER ASSY	USABLE ON CODE
75 -		BRAKE & RUDDER PEDALS INSTALLATION	NP	
- 1	1460320-1	PEDAL ASSEMBLY-BRAKE & RUDDER	2	
- 2	0760678-1	PEDAL ASSEMBLY-BRAKE & RUDDER LH	1	
- 3	0760678-2	PEDAL ASSEMBLY-BRAKE & RUDDER RH	1	
		ATTACHING PARTS		
- 4	1460501-21	SHAFT	1	
- 5	MS24665-285	COTTER PIN	2	
- 5A	0760682-1	SPRING-ANTI RATTLE	1	
		---*---		
- 6	0541138-16	CYLINDER ASSEMBLY-BRAKE	2	
		ATTACHING PARTS		
- 7	0760669-1	PIN	1	
	S1438-2	WASHER	AR	
- 8	0411778-2	SHAFT	1	
	MS24665-132	COTTER PIN UPPER	1	
- 9	MS20392-2C15	PIN-CLEVIS	1	
- 9A	MS24665-132	COTTER PIN LOWER	1	
		---*---		
-10	0411549	BRACKET-BRAKE CYLINDER INSIDE	1	
-11	0411550	BRACKET-BRAKE CYLINDER OUTSIDE	1	
		ATTACHING PARTS		
-12	AN3-4A	BOLT	2	
-13	MS21044N3	NUT	2	
		---*---		
-14	0713624-2	ANCHOR-BRAKE CYLINDER	1	
-15	0411307	ARM-RUDDER BAR	4	
		ATTACHING PARTS		
-16	MS21044N3	NUT	1	
-17	AN3-11A	BOLT	1	
		---*---		
-18	0411564	LINK DUAL CONTROLS	2	
-19	0713629-2	LINK-LH DUAL CONTROLS	1	
-20	0713629-1	LINK-RH DUAL CONTROLS	1	
		ATTACHING PARTS		
-21	MS20392-2C15	CLEVIS PIN	1	
-22	0760669-3	CLEVIS PIN	1	
-23	0411778-2	SHAFT	1	
	NAS43HT3-12	SPACER	1	
	MS24665-132	COTTER PIN	1	
	S1438-2	WASHER	AR	
		---*---		
-24	0411563	BELLCRANK ASSEMBLY DUAL CONTROLS	3	
-25	0411573-1	BELLCRANK ASSEMBLY DUAL CONTROLS	1	
	0411562	HUB SINGLE CONTROLS	4	
		ATTACHING PARTS		
-26	AN3-10A	BOLT	1	
	MS21044N3	NUT	1	
		---*---		
-27	S1674-1	BEARING HALF-OUTBOARD ORDER PAIR	4	
-28		DELETED-NOT AVAILABLE		
-29	S1675-1	BEARING HALF-INBOARD ORDER PAIR	4	
-30		DELETED-NOT AVAILABLE		
		ATTACHING PARTS		
-31	AN3-14A	BOLT	2	
	AN960-10	WASHER	2	
	MS21044N3	NUT OUTBOARD BEARINGS ONLY	2	
		---*---		
-32	0760604-1	ARM-RUDDER BAR	1	
-33	0760604-2	ARM-RUDDER BAR	1	
-34	0760605-1	TUBE-RUDDER BAR	2	
	S1003-43A	BEARING	4	

Master Cylinder

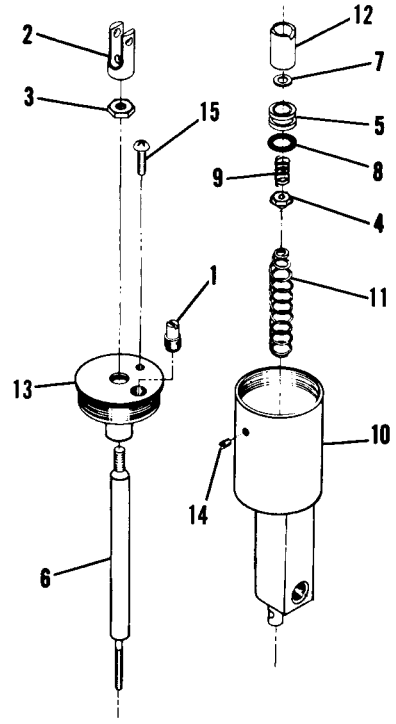

Figure 76. Master Brake Cylinder Assembly

FIGURE AND INDEX NO.	PART NUMBER	DESCRIPTION 1 2 3 4 5 6 7	UNITS PER ASSY	USABLE ON CODE
76 -	0541138-22	CYLINDER ASSY-BRAKE MASTER	2	
- 1	0541139	PLUG	1	
- 2	0541140	CLEVIS	1	
- 3	AN316-4R	NUT-CHECK	1	
	0541138-5	PISTON ASSY-MASTER CYLINDER	1	
		ATTACHING PARTS		
- 4	22FH632	NUT SPS	1	
		---*---		
- 5	0541143	PISTON-MASTER CYLINDER	1	
- 6	0541144	ROD-PISTON	1	
- 7	800-001-6	LOCK-O-SEAL PKSC	1	
- 8	AN6227B8	ORING	1	
- 9	0541148-1	SPRING-PISTON	1	
-10	0541184-2	BODY ASSY-MASTER CYLINDER	1	
-11	0541148	SPRING	1	
-12	0541149	SLEEVE	1	
-13	0541151	COVER	1	
-14	AN565D6-3	SET SCREW	1	
-15	AN515-10R8	SCREW	1	

FIGURE AND INDEX NO.	PART NUMBER	DESCRIPTION 1 2 3 4 5 6 7	UNITS PER ASSY	USABLE ON CODE
77 -		CONTROL COLUMN INSTALLATION	NP	
- 1	1260143-12	TUBE & BEARING ASSY-RH	1	
	1260140-9	TUBE & BEARING ASSY-LH	1	
- 2	0760646-2	RETAINER ASSY	1	
- 3	0760644-1	MACHINE SCREW	4	
- 4	1260664-1	ROLLER KIT	4	
- 5	0760699-1	SLEEVE WELD ASSY	1	
- 6	B228	BEARING TOR	1	
- 7	TRA2233	RACE-BEARING	4	
- 8	NTA2233	BEARING TOR	2	
- 9	S1358-1	SPACER	AR	
-10	MS16624-1137	RING-RETAINING	2	
-11	1560312-1	COLLAR	1	
-12	1260148-1	STUD	2	
-13	1260665-1	CONNECTOR	1	
-14	S1080-4	GROMMET	1	
-15	0713262-2	ATTACH BRACKET ASSY-LH WEU 0713262-4	1	
	0713262-4	ATTACH BRACKET ASSY-LH	1	
	NAS696A08	NUTPLATE	1	
	NAS697A08	NUTPLATE	2	
-16	0713960-1	ATTACH PLATE	1	
-17	NAS220-6	SCREW	10	
-18	NAS679A08	NUT	2	
-19	0760642-2	SPACER	1	
-20	1260668-3	COLLAR	1	
		ATTACHING PARTS		
-21	NAS514-632R10	SCREW	4	
-22	MS21042L6	NUT	4	
		---*---		
-23	1213147-1	COVER PLATE DUAL CONTROLS ONLY	1	
		ATTACHING PARTS		
-24	AN507-832R7	SCREW	4	
	AN507-832R6	SCREW	3	
-25	NAS679A08	NUT	4	
		---*---		
-26	0760101-3	RETAINER DUAL CONTROLS ONLY	1	
		ATTACHING PARTS		
-27	S1021A8-6	SCREW	2	
		---*---		
-28	0760103-1	TUBE ASSY	1	
		ATTACHING PARTS		
-29	NAS222-16	SCREW	1	
-30	0760674-1	SCREW	1	
-31	AN960-416	WASHER	4	
-32	MS21042L4	NUT	2	
	AN960-416L	WASHER	1	
		---*---		
-33	0760691-1	SUPPORT ASSY-LH	1	
	0760695-1	RUB STRIP-CONTROL TUBE OUTBD	1	
	0760695-3	RUB STRIP-CONTROL TUBE INBD	1	
	0760691-2	SUPPORT ASSY-RH USED WITH DUAL CONTROLS ONLY	1	
	0760695-2	RUB STRIP-CONTROL TUBE OUTBD	1	
	0760695-3	RUB STRIP-CONTROL TUBE INBD	1	
	NAS684A08	NUTPLATE	2	
-34	1260141-6	TUBE ASSY-AILERON CONTROL-LH	1	
	1260141-10	TUBE ASSY-AILERON CONTROL-RH	1	
		ATTACHING PARTS		
-35	AN960-516L	WASHER	1	
-36	AN310-5	NUT	1	
-37	MS24665-134	COTTER PIN	1	
		---*---		
-38	0760121-1	GLIDE-LH TUBE ONLY	1	
	0760651-2	GLIDE-RH TUBE ONLY	1	
	0760104-2	PLUG-LH TUBE ONLY	1	
	0760681-1	PLUG-RH TUBE ONLY	1	
		ATTACHING PARTS		
-39	NAS220-14	SCREW	1	
		---*---		

CONTINUED ON NEXT PAGE

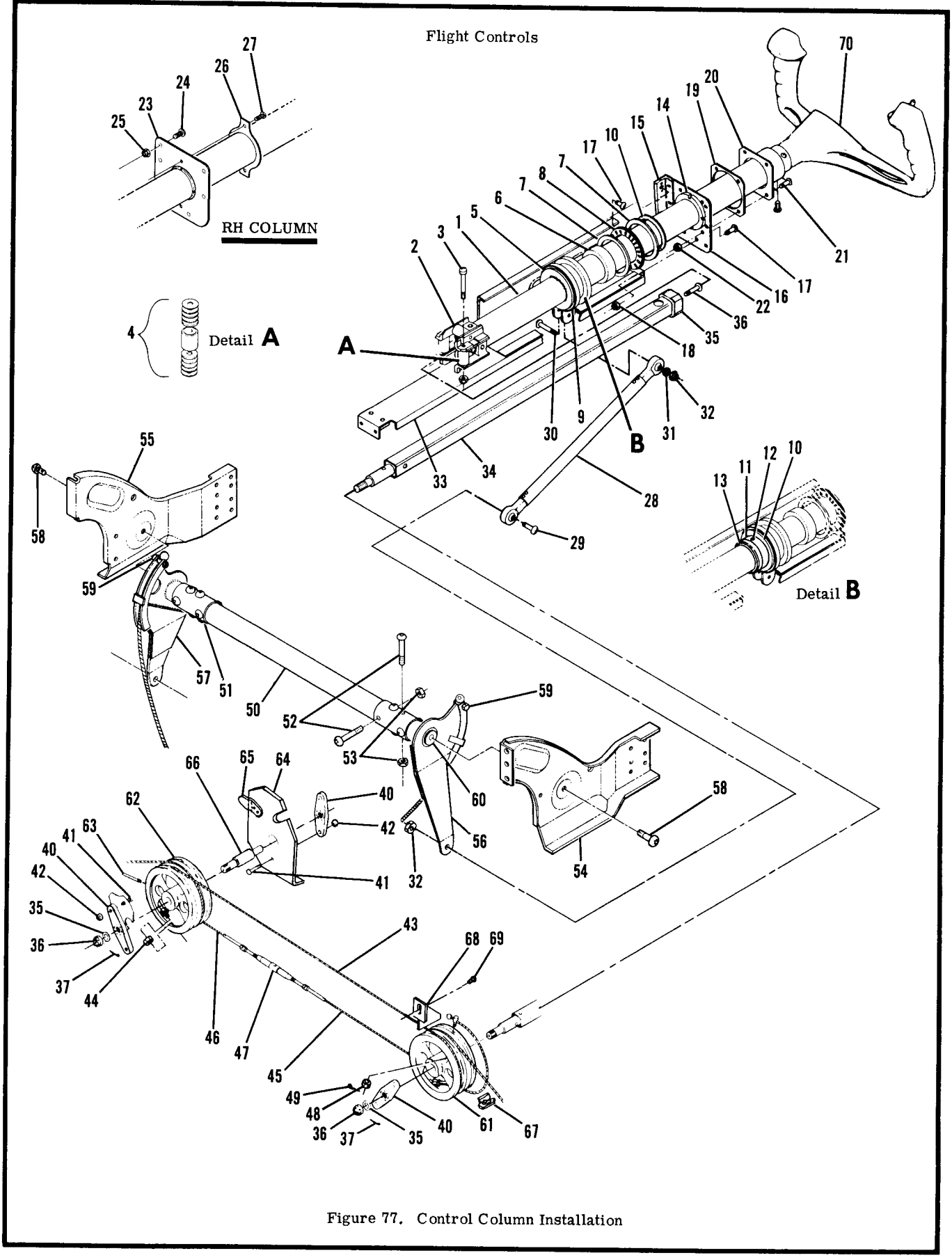

Figure 77. Control Column Installation

FIGURE AND INDEX NO.	PART NUMBER	DESCRIPTION 1 2 3 4 5 6 7	UNITS PER ASSY	USABLE ON CODE
77 -40	0760633-1	BEARING BLOCK	2	
		ATTACHING PARTS		
-41	NAS220-11	SCREW	2	
-42	NAS679A08	NUT	2	
		---*---		
-43	1260078-5	CABLE ASSY	1	
		ATTACHING PARTS		
-44	MS21044N3	NUT	2	
		---*---		
-45	1260078-2	CABLE ASSY-LH	1	
-46	1260078-3	CABLE ASSY-RH	1	
		ATTACHING PARTS		
-47	AN1558325	BARREL	1	
-48	AN310-3	NUT	2	
-49	MS24665-71	COTTER PIN	2	
		---*---		
-50	0760654-1	TUBE-CONTROL	1	
-51	0760655-1	SLEEVE-CONTROL	2	
		ATTACHING PARTS		
-52	NAS220-24	SCREW	4	
-53	NAS679A08	NUT	4	
		---*---		
-54	0760693-1	SUPPORT-BELLCRANK CONTROL TUBE LH	1	
-55	0760693-2	SUPPORT-BELLCRANK CONTROL TUBE RH	1	
-56	0760686-1	ARM ASSY-LH	1	
-57	0760686-2	ARM ASSY-RH	1	
		ATTACHING PARTS		
-58	NAS222-14	SCREW	1	
	MS21042L4	NUT	1	
-59	AN21-10	BOLT	1	
	AN320-1	NUT	1	
	AN960D6	WASHER	AR	
	MS24665-24	PIN	1	
		---*---		
-60	MS24663-4	BEARING	1	
-61	1260112-1	QUADRANT-LH	1	
-62	1260112-2	QUADRANT-RH	1	
		ATTACHING PARTS		
-63	NAS561-6-32	PIN	1	
		---*---		
-64	0760700-1	SUPPORT-BEARING BLOCK SINGLE CONTROL ONLY	1	
		ATTACHING PARTS		
	AN515-8R8	SCREW	4	
	NAS679A08	NUT	4	
		---*---		
-65	0760106-1	GUARD	1	
-66	0760649-2	SHAFT SINGLE CONTROL ONLY	1	
-67	0760107-1	CABLE GUARD-LH	1	
	0760107-2	CABLE GUARD-RH	1	
		ATTACHING PARTS		
	S1021Z8-5	SCREW	2	
		---*---		
-68	0760701-1	CABLE GUARD	1	
		ATTACHING PARTS		
-69	AN515-6R6	SCREW	2	
		---*---		
-70	SEE FIG 79	CONTROL WHEEL & SWITCHES INSTALLATION	1	

Controls (Cont)

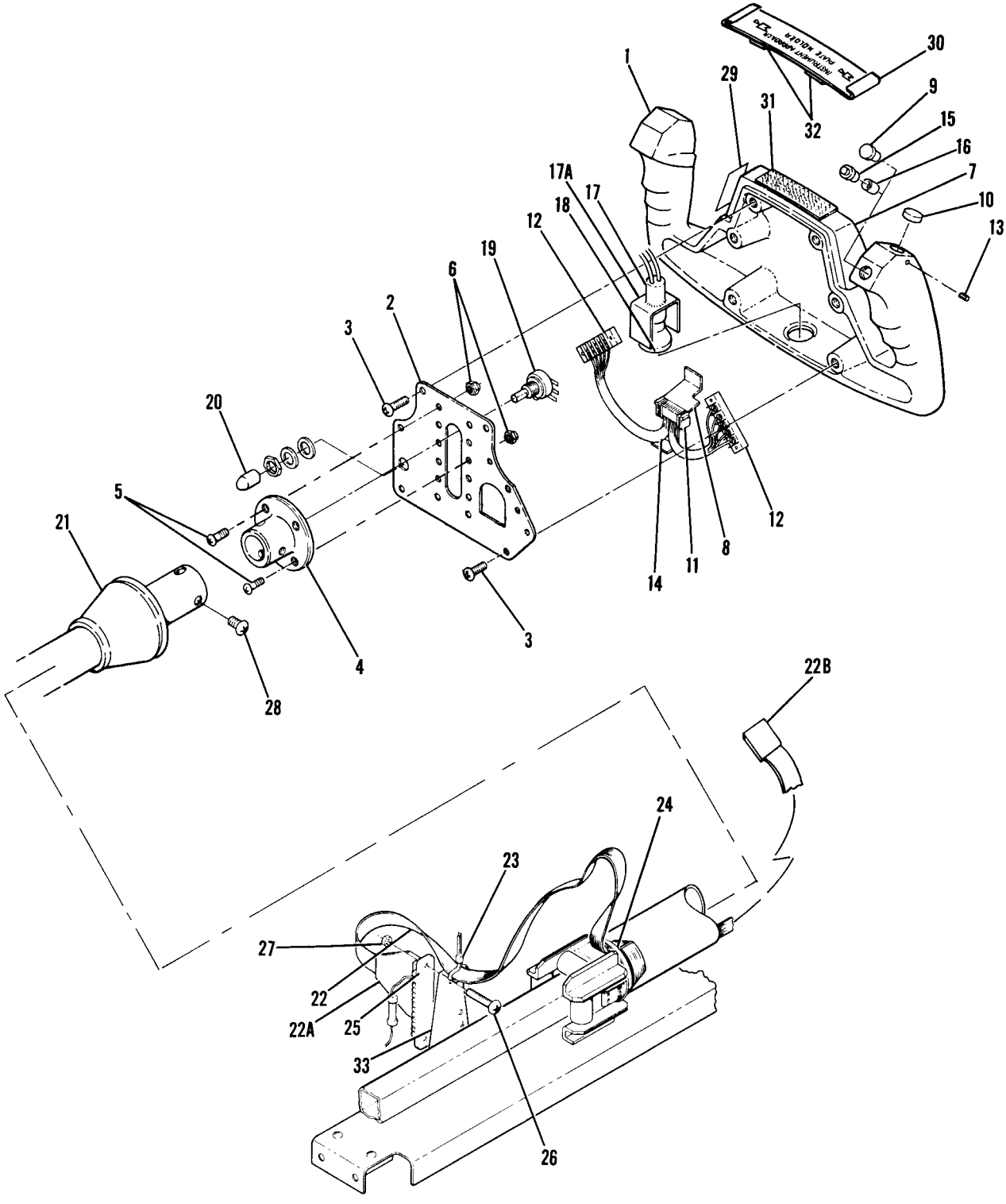

182 SERIAL 18262466 THRU 18263014

Figure 78. Control Wheel & Switches Installation

FIGURE AND INDEX NO.	PART NUMBER	DESCRIPTION 1 2 3 4 5 6 7	UNITS PER ASSY	USABLE ON CODE
78 -		CONTROL WHEEL & SWITCHES INSTALLATION	NP	A
- 1	0760019-3	CONTROL WHEEL ASSY-PADDED HAS MAPLIGHT & MIKE SWITCH PROVISIONS	1	
	0760019-1	CONTROL WHEEL ASSEMBLY-PADDED UNDRILLED	1	
- 2	0760016-1	PLATE	1	
		ATTACHING PARTS		
- 3	NAS221-9	SCREW	6	
		---*---		
	MS21209F1-20	INSERT	6	
- 4	0760017-2	ADAPTOR ASSEMBLY	1	
		ATTACHING PARTS		
- 5	NAS221-11	SCREW	4	
- 6	MS21044N3	NUT	4	
		---*---		
- 7	0760018-1	PAD-CONTROL WHEEL	1	
- 8	0760022-1	BRACKET	1	
- 9	1270682-1	PLUG-MIKE SWITCH HOLE	1	
-10	1560110-3	PLUG-SWITCH HOLE	1	
-11	255-10-30-190	CONNECTOR	1	
-12	351-11-05-001	TERMINAL BLOCK	2	
-13	AN565B4-2	SCREW LEFT HAND ONLY ATTACH PLUG	1	
-14	SF1030BX	CABLE	1	
-15	S1985-1	SWITCH-MIKE	1	
-16		INSULATION USE MYLAR ELECTRICAL TAPE	NP	
-17	4157-001	SOCKET-MAP LIGHT	1	
-17A	0760023-1	BRACKET	1	
-18	12R8	LAMP-MAP LIGHT	1	
-19	3859A-282-251A	RHEOSTAT-MAP LIGHT 250 OHM	1	
-20	S2093-1	COVER	1	
-21	0760021-1	COVER-CONTROL WHEEL ADAPTOR	1	
-22	1270060-2	CABLE	1	
-22A	1270062-1	CIRCUIT BOARD	1	
-22B	1270061-1	CIRCUIT BOARD	1	
-23	S1693-1	STA-STRAP	1	
-24	S1693-2	STA-STRAP	1	
-25	582384-9	SOCKET ARP	1	
		ATTACHING PARTS		
-26	AN515-6R8	SCREW	2	
-27	MS21044N06	NUT	2	
		---*---		
-28	AN3-3A	BOLT ATTACH CONTROL WHEEL ASSEMBLY	3	
	AN960-10L	WASHER	3	
-29	0705028-1	PLACARD-MAP LIGHT	1	
-30	0715046-4	APPROACH PLATE HOLDER ASSY	1	
		ATTACHING PARTS		
-31	S2092-10	FASTENER-PILE	1	
		---*---		
-32	S2092-3	FASTENER-HOOK	2	
-33	1513145-1	SUPPORT BRACKET-TERMINAL STRIP	1	
	SEE FIG 2	PLACARD-CONTROL WHEEL	1	
		A---182 SERIAL 18262466 THRU 18263014		

Controls (Cont)

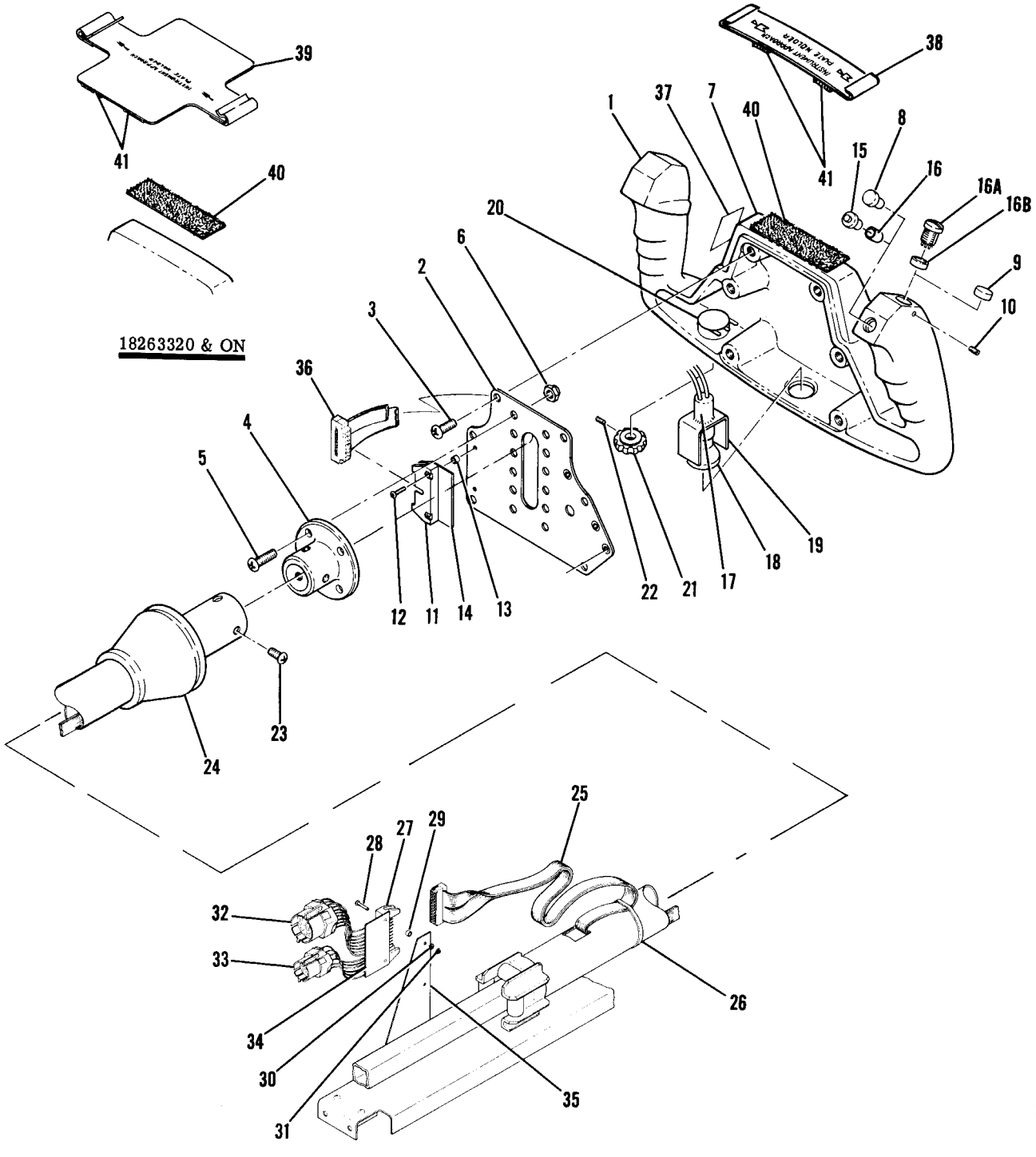

182 SERIAL 18263015 & ON

Figure 78A. Control Wheel & Switches Installation

FIGURE AND INDEX NO.	PART NUMBER	DESCRIPTION 1 2 3 4 5 6 7	UNITS PER ASSY	USABLE ON CODE
78A-		CONTROL WHEEL & SWITCHES INSTALLATION	NP	A
- 1	0760019-10	CONTROL WHEEL ASSY-PADDED HAS MAPLIGHT & MIKE SWITCH PROVISIONS	1	B
	0760019-15	CONTROL WHEEL ASSY-PADDED HAS MAPLIGHT & MIKE SWITCH PROVISIONS	1	C
	0760019-1	CONTROL WHEEL ASSY-PADDED UNDRILLED	1	B
	0760019-12	CONTROL WHEEL ASSY-PADDED UNDRILLED	1	C
- 2	0760016-4	PLATE ASSY	1	
		ATTACHING PARTS		
- 3	NAS221-9	SCREW	6	
		---*---		
	MS21209F1-20	INSERT	6	
- 4	0760017-2	ADAPTOR ASSY	1	
		ATTACHING PARTS		
- 5	NAS221-1	SCREW	4	
- 6	MS21044N3	NUT	4	
		---*---		
- 7	0760018-1	PAD-CONTROL	1	B
	0760029-1	PAD-CONTROL	1	C
- 8	1270682-1	PLUG-MIKE SWITCH HOLE	1	
- 9	1560110-3	PLUG-SWITCH	1	
-10	AN565B4-2	SCREW LH ONLY ATTACH PLUG	1	
-11	1570307-1	CONNECTOR ASSY	1	
		ATTACHING PARTS		
-12	AN520-3R8	SCREW	2	
-13	NAS43DD0-8A	SPACER	2	
		---*---		
-14	1570306-1	CIRCUIT BOARD	1	
-15	S1985-1	SWITCH-MIKE	1	
-16		INSULATION USE MYLAR ELECTRICAL TAPE	NP	
-16A	S2030-1	SWITCH-TRIM	1	D
-16B	1560110-1	ADAPTOR	1	D
-17	4157-001	SOCKET-MAP LIGHT	1	
-18	12RB	LAMP-MAP LIGHT	1	
-19	0760023-1	MOUNTING BRACKET-MAP LIGHT SOCKET	1	
-20	3859A-161-152A	RHEOSTAT-DIMMER SWITCH	1	
-21	1270483-2	KNOB ASSY-DIMMER SWITCH	1	
		ATTACHING PARTS		
-22	AN565B2H3	SET SCREW	1	
		---*---		
-23	AN3-3A	BOLT ATTACH CONTROL WHEEL ASSY	3	
	AN960-10L	WASHER	3	
-24	0760021-1	COVER-CONTROL WHEEL ADAPTOR	1	
-25	1570308-1	CABLE ASSY	1	
-26	S2209-2	STA-STRAP	1	
-27	1570307-2	CABLE ASSY	1	
		ATTACHING PARTS		
-28	AN520-3R10	SCREW	2	
-29	NAS43DD0-8A	SPACER	2	
-30	AN936-A3	WASHER	2	
-31	AN340-3	NUT	2	
		---*---		
-32	S1962-1-0	HOUSING	1	
-33	S1960-1-0	HOUSING	1	
-34	1570306-1	CIRCUIT BOARD	1	
-35	1570309-1	SUPPORT-CABLE ASSY	1	
-36	3421-0000	CONNECTOR-SOCKET	1	
-37	0705028-1	PLACARD-MAP LIGHT	1	
-38	0715046-4	APPROACH PLATE HOLDER ASSY	1	
-39	0715046-8	APPROACH PLATE HOLDER ASSY FOR JEPPSON APPROACH PLATE ON	1	
		ATTACHING PARTS		
-40	S2092-10	FASTENER-PILE	1	
		---*---		
-41	S2092-3	FASTENER-HOOK	2	

A---182 SERIAL 18263015 & ON
B---182 SERIAL 18263015 THRU 18263475
C---182 SERIAL 18263476 & ON
D---182 SERIAL 18264296 & ON

Flight Controls (Cont)

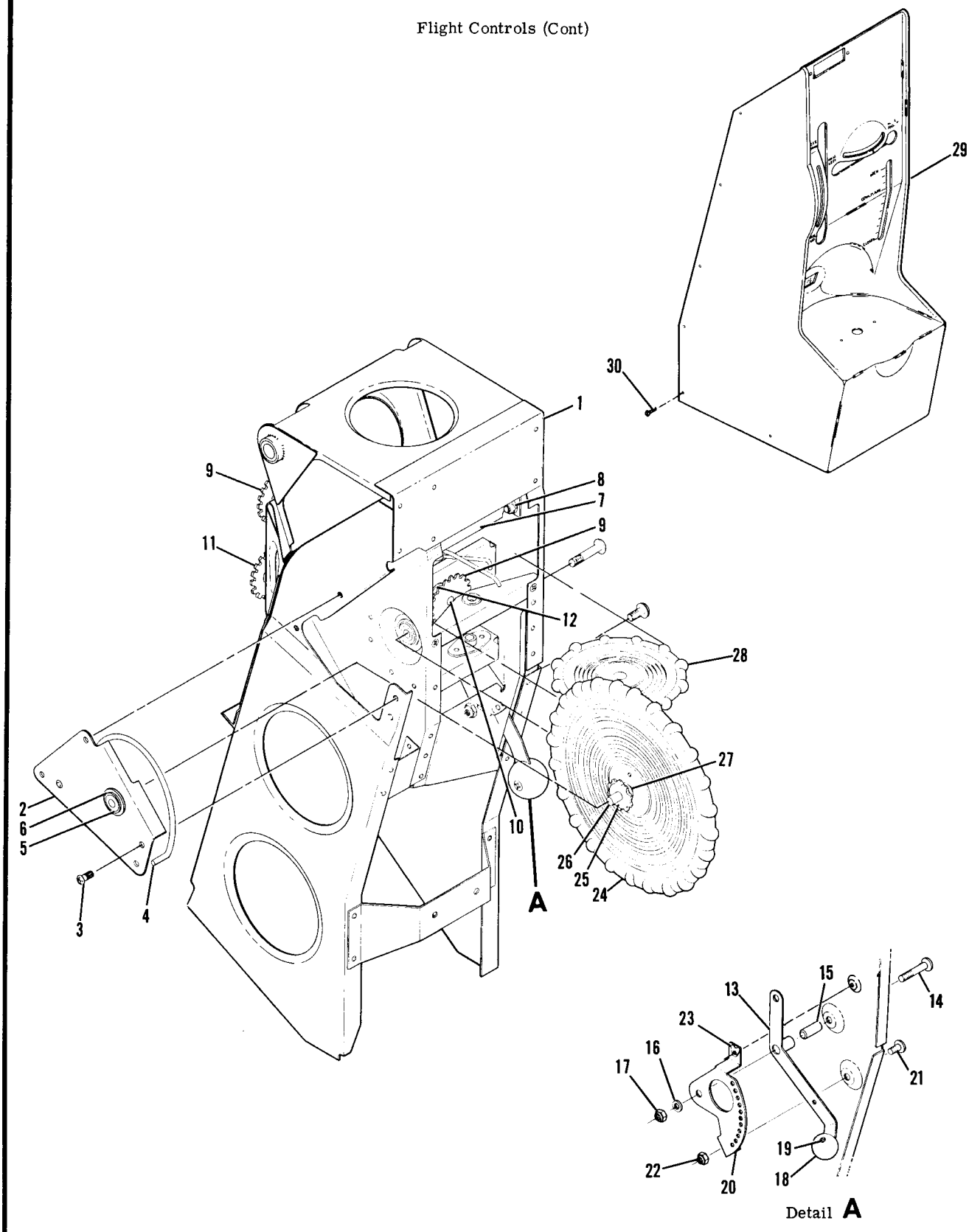

Figure 79. Console Installation

FIGURE AND INDEX NO.	PART NUMBER	DESCRIPTION 1 2 3 4 5 6 7	UNITS PER ASSY	USABLE ON CODE
79 -		CONSOLE INSTALLATION	.NP	
- 1	SEE FIG 20	STRUCTURE ASSY-CONSOLE	1	
- 2	0713642-1	RETAINER ASSY-ELEVATOR TRIM	1	
		ATTACHING PARTS		
- 3	NAS220-5	SCREW	4	
		---*---		
- 4	0713642-3	INDICATOR-STABILIZER TRIM	1	
		ATTACHING PARTS		
	0713032-1	BUSHING	1	
	0713032-2	COLLAR	1	
		---*---		
- 5	NAS295M4	BEARING TOR	1	
- 6	0411420	HOUSING	1	
- 7	0713643-1	SUPPORT ASSY-RUDDER TRIM INDICATOR	1	
		ATTACHING PARTS		
	AN515-8R6	SCREW	4	
- 8	NAS679A08	NUT	4	
		---*---		
	0713643-3	INDICATOR-RUDDER TRIM	1	
	0713653-1	SPROCKET ASSY-RUDDER TRIM	1	
- 9	0761210-1	SPROCKET	2	
		ATTACHING PARTS		
	NAS561-3-8	PIN	1	
		---*---		
-10	0713653-2	SHAFT	1	
-11	0761210-5	SPROCKET-IDLER	1	
		ATTACHING PARTS		
	AN3-6A	BOLT	1	
	0713640-12	SPACER	1	
	AN960-10L	WASHER	3	
	MS21044N3	NUT	1	
		---*---		
-12	NAS430D4-18	SPACER	1	
	AN960-416L	WASHER	AR	
-13	0713315-6	LEVER ASSY-COWL FLAP	1	
		ATTACHING PARTS		
-14	AN525-10R22	SCREW	1	
-15	NAS76A3-028	BUSHING	1	
-16	AN960PD10	WASHER	1	
-17	MS21044N3	NUT	1	
		---*---		
-18	S1249-2	KNOB	1	
		ATTACHING PARTS		
-19	AN507-1032R8	SCREW	1	
	S1196-1	WASHER	1	
		---*---		
-20	0713314-1	POSITION BRACKET-COWL FLAP CONTROL	1	
		ATTACHING PARTS		
-21	AN525-10R6	SCREW	2	
-22	MS21044N3	NUT	1	
		---*---		
-23	NAS698A3	NUTPLATE	1	
-24	0713656-1	WHEEL ASSY-ELEVATOR TRIM	1	
-25	0432134-1	SPROCKET	1	
-26	0713656-3	SHAFT	1	
-27	NAS561-3-8	PIN	1	
-28	1713269-1	WHEEL ASSY-RUDDER TRIM	1	
		ATTACHING PARTS		
	MS24665-132	COTTER PIN	1	
		---*---		
-29	SEE FIG 101	CONSOLE COVER & LIGHTING INSTALLATION	1	
		ATTACHING PARTS		
-30	S1021-8-6	SCREW	11	
		---*---		

This page intentionally left blank.

FIGURE AND INDEX NO.	PART NUMBER	DESCRIPTION 1 2 3 4 5 6 7	UNITS PER ASSY	USABLE ON CODE
80 -		AILERON CONTROL SYSTEM INSTALLATION	NP	
- 1	0510105-228	CABLE ASSEMBLY-AILERON DIRECT	1	
	0510105-328	CABLE ASSEMBLY-AILERON DIRECT STAINLESS STEEL	1	
		ATTACHING PARTS		
- 2	AN3-7A	BOLT	1	
- 3	0422280	BUSHING	1	
- 4	MS21044N3	NUT	1	
- 5	AN155B32L	BARREL	1	
- 6	AN161-32LL	FORK	1	
		---*---		
- 6A	0713944-1	GUARD-CABLE	2	
- 7	0510105-13	CABLE ASSEMBLY-AILERON CARRY THRU	1	
	0510105-113	CABLE ASSEMBLY-AILERON CARRY THRU STAINLESS STEEL	1	
		ATTACHING PARTS		
- 8	AN3-7A	BOLT	2	
- 9	0422280	BUSHING	2	
-10	MS21044N3	NUT	2	
-11	AN161-32LL	FORK LH ONLY	1	
-12	AN155B32L	BARREL LH ONLY	1	
		---*---		

CONTINUED ON NEXT PAGE

Flight Controls (Cont)

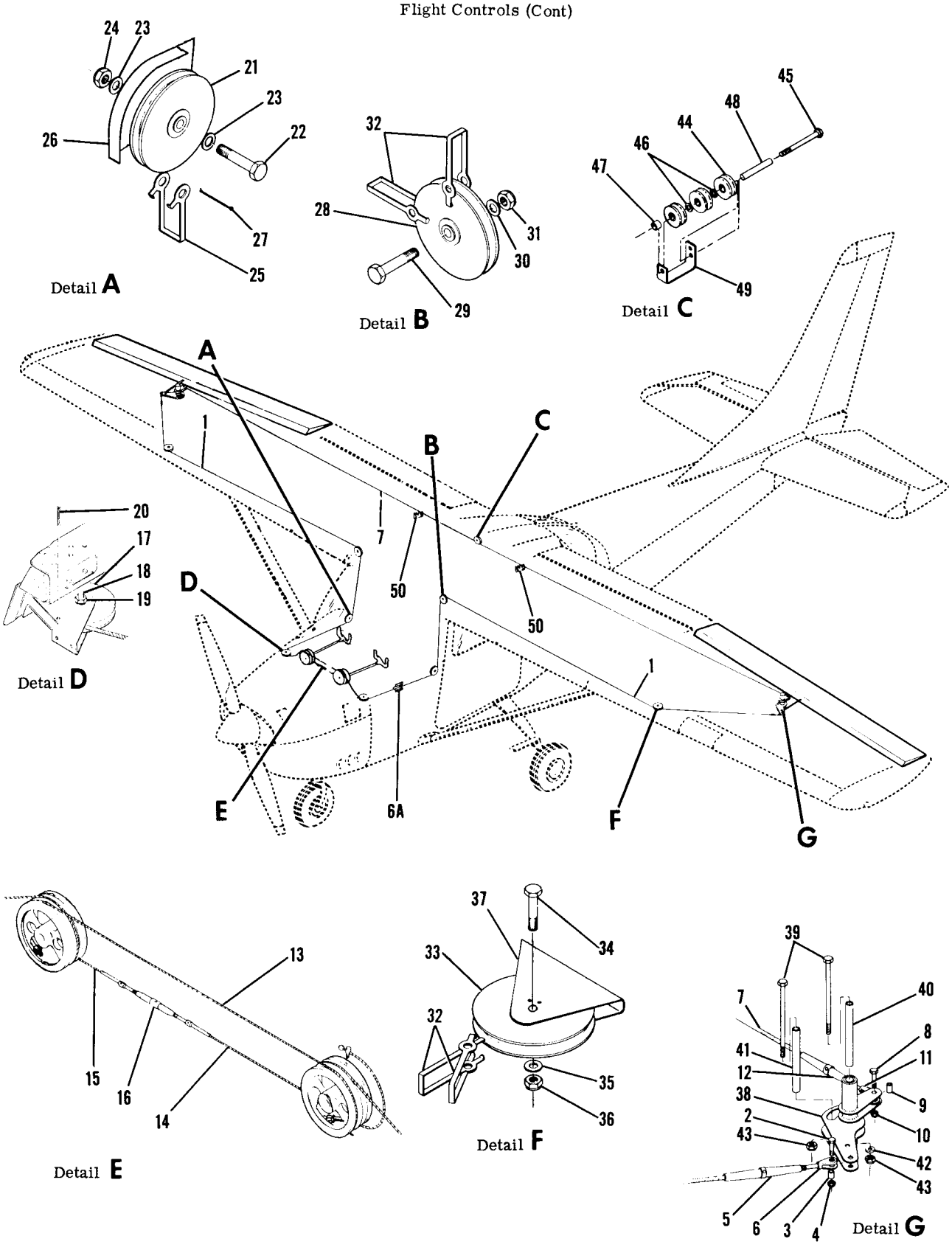

Figure 80. Aileron Controls Installation

FIGURE AND INDEX NO.	PART NUMBER	DESCRIPTION 1 2 3 4 5 6 7	UNITS PER ASSY	USABLE ON CODE
80 -13	1260078-5	CABLE ASSEMBLY	1	
-14	1260078-2	CABLE ASSEMBLY LH	1	
	1260078-102	CABLE ASSEMBLY-LH STAINLESS STEEL	1	
-15	1260078-3	CABLE ASSEMBLY RH	1	
	1260078-103	CABLE ASSEMBLY-RH STAINLESS STEEL	1	
-16	AN155832S	BARREL	1	
-17	MS20220-2	PULLEY	1	
		ATTACHING PARTS		
-18	AN5-11A	BOLT	1	
	AN960-516	WASHER	2	
-19	MS21042L5	NUT	1	
-20	MS24665-136	PIN-COTTER	1	
		---*---		
-21	MS20220-2	PULLEY	2	
		ATTACHING PARTS		
-22	AN5-13A	BOLT	1	
-23	AN960-516L	WASHER	2	
-24	MS21042L5	NUT	1	
		---*---		
-25	0760610-1	GUARD	2	
-26	0760680-1	GUARD-PULLEY RH	1	
	0760680-2	GUARD-PULLEY LH	1	
-27	MS24665-285	PIN-COTTER	2	
-28	MS20220-2	PULLEY	2	
		ATTACHING PARTS		
-29	AN5-13A	BOLT	1	
-30	AN960-516	WASHER	2	
-31	MS21042L5	NUT	1	
		---*---		
-32	0760610-2	GUARD	8	
-33	S378-4	PULLEY	2	
		ATTACHING PARTS		
-34	AN4-11A	BOLT	1	
-35	AN960-416	WASHER	6	
-36	MS21042L4	NUT	1	
		---*---		
-37	0760609-1	BRACKET-AILERON PULLEY	1	
-38	0760703-5	BELLCRANK ASSEMBLY-LH	1	
	0760703-6	BELLCRANK ASSEMBLY-RH	1	
		ATTACHING PARTS		
-39	AN4-42A	BOLT	2	
-40	0523321	BUSHING	1	
-41	0523222	BUSHING	1	
-42	0522629-1	WASHER	1	
-43	MS21042L4	NUT	2	
		---*---		
-44	S394	PULLEY	1	
		ATTACHING PARTS		
-45	AN3-21A	BOLT	1	
-46	AN960-416	WASHER	2	
-47	NAS43HT4-16	SPACER	1	
-48	0512138	BUSHING	1	
-49	0512136	GUARD	1	
		---*---		
-50	0760615-1	GUARD	2	
	0760616-1	RUB-STRIP	2	
		ATTACHING PARTS		
	AN515-8R12	SCREW	2	
	NAS679A08	NUT	2	
		---*---		
-51	1262005-1	BRACKET	1	
	MS21919DG6	CLAMP	1	
		ATTACHING PARTS		
	S1021Z10-6	SCREW	1	
	NAS446-1-3	NUT	1	
		---*---		

Flight Controls (Cont)

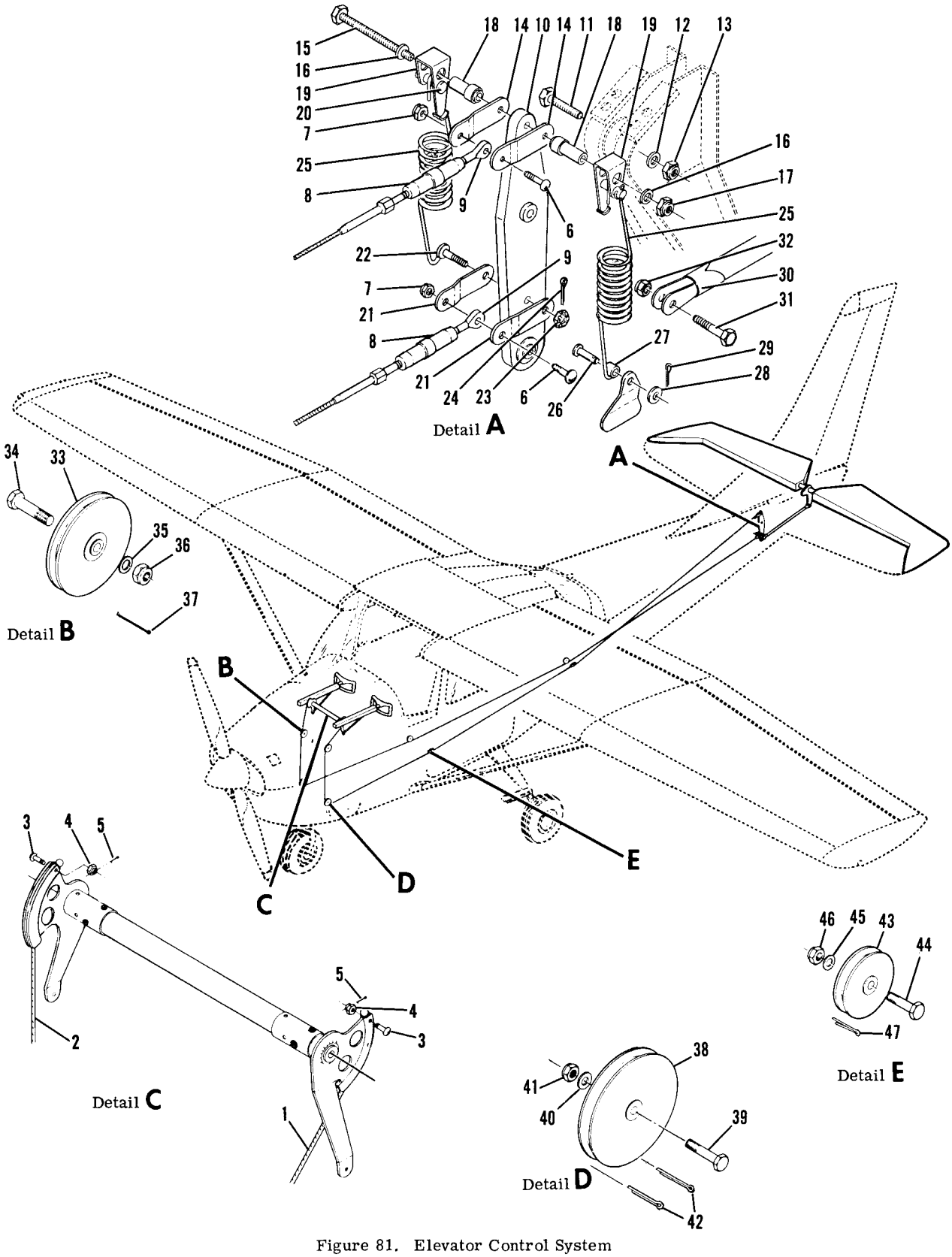

Figure 81. Elevator Control System

FIGURE AND INDEX NO.	PART NUMBER	DESCRIPTION 1 2 3 4 5 6 7	UNITS PER ASSY	USABLE ON CODE
81 -		ELEVATOR CONTROL SYSTEM	NP	
- 1	0510105-90	CABLE ASSY-LH	1	
	0510105-190	CABLE ASSY-LH STAINLESS STEEL	1	
- 2	0510105-89	CABLE ASSY-RH	1	
	0510105-189	CABLE ASSY-RH STAINLESS STEEL	1	
		ATTACHING PARTS		
- 3	AN21-10	BOLT	1	
- 4	AN320-1	NUT	1	
	AN960D6	WASHER	1	
- 5	MS24665-24	COTTER PIN	1	
- 6	AN23-10A	BOLT	1	
- 7	MS21044N3	NUT	1	
- 8	AN155B32S	BARREL	1	
- 9	AN165-22RS	EYE-TURNBUCKLE	1	
		---*---		
-10	0760675-5	BELLCRANK ASSY-ELEVATOR REAR	1	
		ATTACHING PARTS		
-11	AN4-12A	BOLT	1	
-12	AN960-416	WASHER	1	
-13	MS21042L4	NUT	1	
		---*---		
-14	0761202-4	LINK-ELEVATOR BELLCRANK	2	
		ATTACHING PARTS		
-15	AN4-31A	BOLT	1	
-16	AN960-416	WASHER	2	
-17	MS21042L4	NUT	1	
-18	0760687-2	SPACER	2	
-19	0760130-1	LINK ASSY	2	
		---*---		
-20	MS20392-3C25	PIN	2	
	MS24665-132	COTTER PIN	2	
-21	0761202-2	LINK-ELEVATOR BELLCRANK	2	
		ATTACHING PARTS		
-22	AN24-14	BOLT	1	
-23	AN320-4	NUT	1	
-24	MS24665-134	COTTER PIN	1	
		---*---		
-25	0760685-1	SPRING-ELEVATOR BELLCRANK	2	
		ATTACHING PARTS		
-26	MS20392-3C19	PIN	1	
-27	NAS43HT4-16	SPACER	1	
-28	AN960-416L	WASHER	1	
-29	MS24665-132	COTTER PIN	1	
		---*---		
-30	0510111-11	LINK-PUSH PULL	1	
		ATTACHING PARTS		
-31	AN4-10A	BOLT	1	
-32	MS21042L4	NUT	1	
		---*---		
-33	MS20220-2	PULLEY	2	
		ATTACHING PARTS		
-34	AN5-11A	BOLT	1	
-35	AN960-516	WASHER	1	
-36	MS21042L5	NUT	1	
		---*---		
-37	MS24665-136	COTTER PIN	1	
-38	S378-4	PULLEY	2	
		ATTACHING PARTS		
-39	AN4-10A	BOLT	1	
-40	AN960-416L	WASHER	1	
-41	MS21042L4	NUT	1	
		---*---		
-42	MS24665-136	COTTER PIN	4	
-43	S378-3L	PULLEY	4	
		ATTACHING PARTS		
-44	AN4-10A	BOLT	1	
-45	AN960-416L	WASHER	1	
-46	MS21042L4	NUT	1	
		---*---		
-47	MS24665-136	COTTER PIN	2	

Flight Controls (Cont)

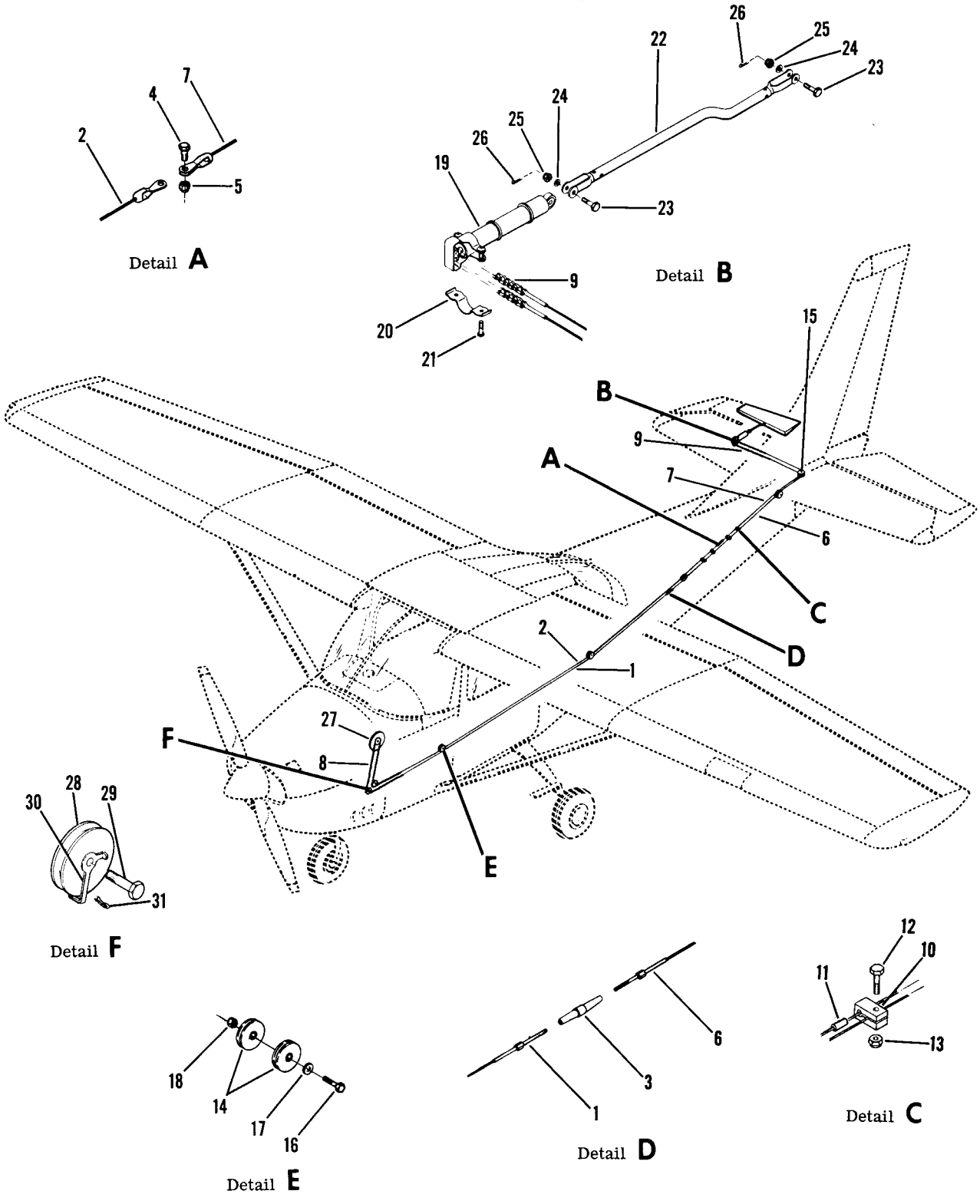

Figure 82. Elevator Trim Control System

FIGURE AND INDEX NO.	PART NUMBER	DESCRIPTION 1 2 3 4 5 6 7	UNITS PER ASSY	USABLE ON CODE
82 -		ELEVATOR TRIM CONTROL SYSTEM	NP	
- 1	0510105-201	CABLE ASSY-LH FWD	1	
	0510105-301	CABLE ASSY-LH FWD STAINLESS STEEL	1	
- 2	0510105-202	CABLE ASSY-RH FWD	1	
	0510105-302	CABLE ASSY-RH FWD STAINLESS STEEL	1	
		ATTACHING PARTS		
- 3	AN1558BS	BARREL LH ONLY	1	
- 4	AN3-3A	BOLT RH ONLY	1	
- 5	MS21044N3	NUT RH ONLY	1	
		---*---		
- 6	0510105-87	CABLE ASSY-LH AFT	1	
	0510105-187	CABLE ASSY-LH AFT STAINLESS STEEL	1	
- 7	0510105-98	CABLE ASSY-RH AFT	1	
	0510105-198	CABLE ASSY-RH AFT STAINLESS STEEL	1	
- 8	0432138-6	CHAIN-FWD	1	
- 9	0432138-7	CHAIN-AFT	1	
-10	0411523	BLOCK-ELEVATOR TAB STOP	4	
		ATTACHING PARTS		
-11	0411524	BUSHING	1	
-12	AN3-6A	BOLT	1	
-13	MS21044N3	NUT	1	
		---*---		
-14	S378-1	PULLEY-ELEVATOR TRIM	2	
-15	S378-1L	PULLEY-ELEVATOR TRIM	8	
-16	AN3-10A	BOLT	5	
-17	AN960-416L	WASHER	5	
-18	MS21044N3	NUT	5	
	MS24665-136	COTTER PIN	3	
-19	SEE FIG 82B	ACTUATOR ASSY-ELEVATOR TRIM	1	
		ATTACHING PARTS		
-20	0432126	CLAMP	2	
-21	AN520-10R8	SCREW	4	
		---*---		
-22	0760133-1	TUBE-PUSH PULL	1	
		ATTACHING PARTS		
-23	NAS464P3-9	BOLT	2	
-24	AN960-10L	WASHER	2	
-25	AN320C3	NUT	2	
-26	MS24665-134	COTTER PIN	2	
		---*---		
-27	SEE FIG 80	CONSOLE INSTALLATION	1	
-28	S378-2	PULLEY	2	
		ATTACHING PARTS		
-29	AN3-10A	BOLT	1	
-30	0760610-4	GUARD-CABLE	1	
-31	MS24665-144	COTTER PIN	1	
		---*---		

Flight Controls (Cont)

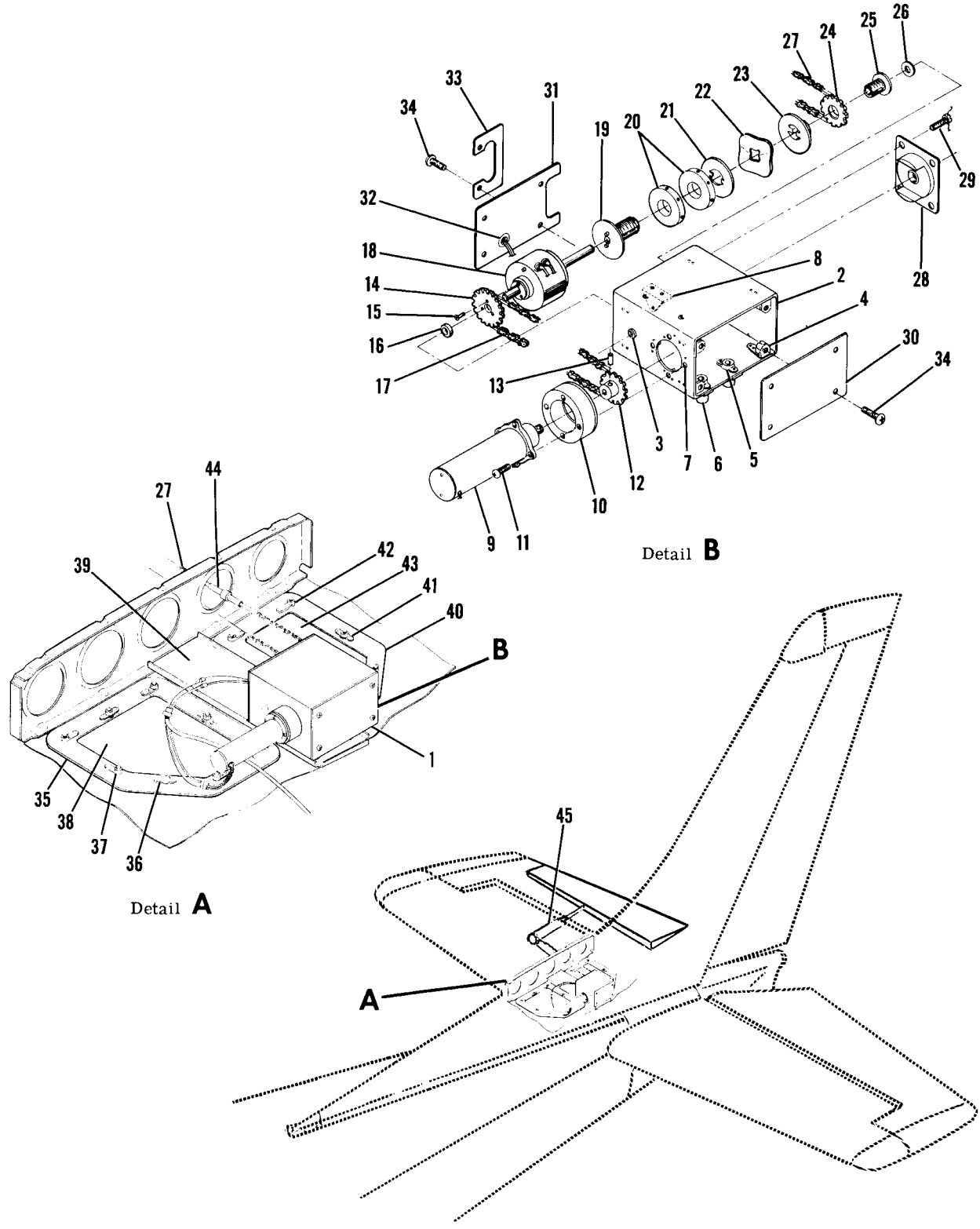

182 SERIAL 18264296 & ON

Figure 82A. Elevator Electric Trim Components Installation

FIGURE AND INDEX NO.	PART NUMBER	DESCRIPTION 1 2 3 4 5 6 7	UNITS PER ASSY	USABLE ON CODE
82A-		ELEVATOR ELECTRIC TRIM COMPONENTS INSTALLATION	NP	A
- 1	1260153-5	DRIVE ASSY-ELECTRIC TRIM-12 VOLT	1	
		ATTACHING PARTS		
	AN3-7A	BOLT	4	
		---*---		
- 2	1260158-1	HOUSING ASSY-ELECTRIC TRIM	1	
- 3	S1004-44A	BEARING	1	
- 4	AN256F8	NUTPLATE-SELF LOCKING RIGHT ANGLE	8	
- 5	NAS680A3	NUTPLATE	4	
- 6	1260158-3	MOUNTING PLATE	4	
- 7	NAS1068A08	NUTPLATE	4	
- 8	1260158-5	STOP ASSY-CLUTCH	1	
		ATTACHING PARTS		
	AN507-632R6	SCREW	2	
		---*---		
	NAS698A06L	NUTPLATE	2	
- 9	C610502-0101	MOTOR-GEAR	1	
		ATTACHING PARTS		
-10	1260155-4	MOUNTING PLATE	1	
	1260155-5	SHIM	1	
-11	AN515-8R10	SCREW	4	
	AN935-8L	WASHER	4	
		---*---		
-12	1260154-1	SPROCKET-ELECTRIC TRIM MOTOR	1	
		ATTACHING PARTS		
-13	NAS561P4-8	PIN	1	
		---*---		
-14	1560321-14	SPROCKET	1	
		ATTACHING PARTS		
-15	AN507-440R6	SCREW	3	
		---*---		
-16	NAS76A4-006	BUSHING	1	
-17	1260153-2	CHAIN	1	
-18	FTC750J	CLUTCH-12VOLT	1	
	S1693-3	STA-STRAP	1	
	1260156-1	SPROCKET CLUTCH ASSY-ELECTRIC TRIM	1	
-19	1260156-4	SHAFT ASSY	1	
-20	1560321-10	NUT	2	
-21	1560321-4	WASHER	1	
-22	1560321-9	SPRING WASHER	1	
-23	1260156-6	WASHER ASSY	1	
-24	1260156-2	SPROCKET	1	
-25	1260156-3	SHAFT	1	
-26	AN960-416L	WASHER	AR	
-27	1260159-1	CHAIN ASSY	1	
-28	1260155-1	MOUNTING PLATE ASSY	1	
		ATTACHING PARTS		
-29	AN500A8-5	SCREW	4	
		---*---		
-30	1260157-4	COVER	1	
-31	1260157-1	COVER ASSY	1	
-32	MS35489-4S	GROMMET	1	
-33	1260157-3	RUB STRIP	1	
		ATTACHING PARTS		
-34	AN515-8R7	SCREW	8	
		---*---		

CONTINUED ON NEXT PAGE

FIGURE AND INDEX NO.	PART NUMBER	DESCRIPTION 1 2 3 4 5 6 7	UNITS PER ASSY	USABLE ON CODE
82A-35	0732001-1	DOUBLER ASSY	1	
-36	NAS680A3K	NUTPLATE	3	
-37	NAS682A3K	NUTPLATE	5	
-38	0732001-3	COVER PLATE-ACCESS	1	
		ATTACHING PARTS		
	AN515-10R6	SCREW	8	
		---*---		
-39	1232015-1	SUPPORT	1	
-40	0732002-1	DOUBLER ASSY	1	
-41	NAS680A3K	NUTPLATE	3	
-42	NAS682A3K	NUTPLATE	3	
-43	0732002-3	COVER PLATE-ACCESS	1	
		ATTACHING PARTS		
	AN515-10R6	SCREW	6	
		---*---		
-44	AN155-16S	BARREL	1	
-45	SEE FIG 82B	ACTUATOR ASSY	1	
		A---182 SERIAL 18264296 & ON		

Flight Controls (Cont)

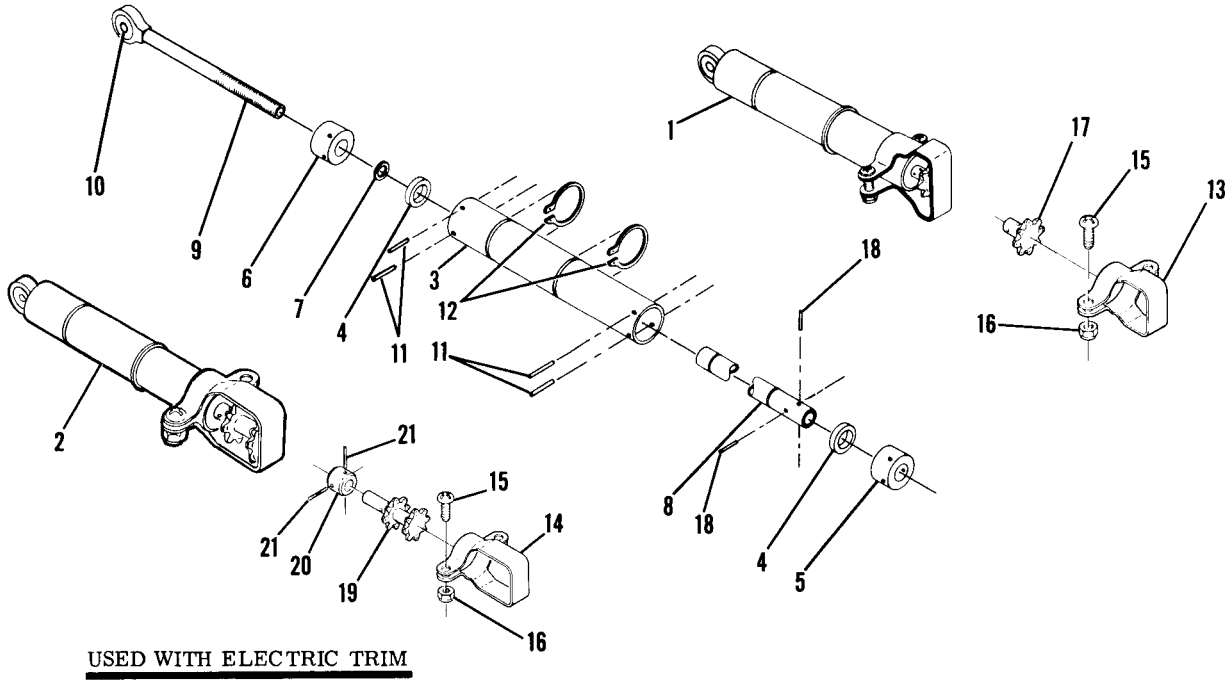

Figure 82B. Elevator Trim Tab Actuator Assembly

FIGURE AND INDEX NO.	PART NUMBER	DESCRIPTION 1 2 3 4 5 6 7	UNITS PER ASSY	USABLE ON CODE
82B- 1	1260074-1	ELEVATOR TRIM TAB ACTUATOR ASSY	1	A
- 2	1260074-7	ELEVATOR TRIM TAB ACTUATOR ASSY USED WITH ELECTRIC TRIM	1	B
- 3	0310296	HOUSING	1	
- 4	0310295	COLLAR-ACTUATOR	1	
- 5	0310297-1	BEARING	1	
- 6	0310298-1	BEARING	1	
- 7	AN6227-5	PACKING	1	
- 8	1260049-1	SCREW-INTERNAL THREADS	1	
- 9	0310362-5	SCREW ASSY	1	
-10	PN3A	BEARING TOR	1	
-11	1/16X.62TYPE3	GROOV-PIN	4	
-12	MS16624-1081	RING-RETAINER OUTSIDE	2	
-13	0310422-1	GUARD-ROLL CHAIN	1	A
-14	1260147-1	GUARD-ROLL CHAIN USED WITH ELECTRIC TRIM	1	B
		ATTACHING PARTS		
-15	AN515-8R8	SCREW	2	
-16	MS21044N08	NUT	2	
		---*---		
-17	0310332	SPROCKET	1	A
		ATTACHING PARTS		
-18	3/32X.375TYPE3	GROOV-PIN	2	A
		---*---		
-19	1260113-1	SPROCKET USED WITH ELECTRIC TRIM	1	B
		ATTACHING PARTS		
-20	1260113-2	COLLAR USED WITH ELECTRIC TRIM	1	B
-21	3/32X.500TYPE3	GROOV-PIN USED WITH ELECTRIC TRIM	2	B
		---*---		

A---182 SERIAL 18262466 & ON
B---182 SERIAL 18264296 & ON

Flight Controls (Cont)

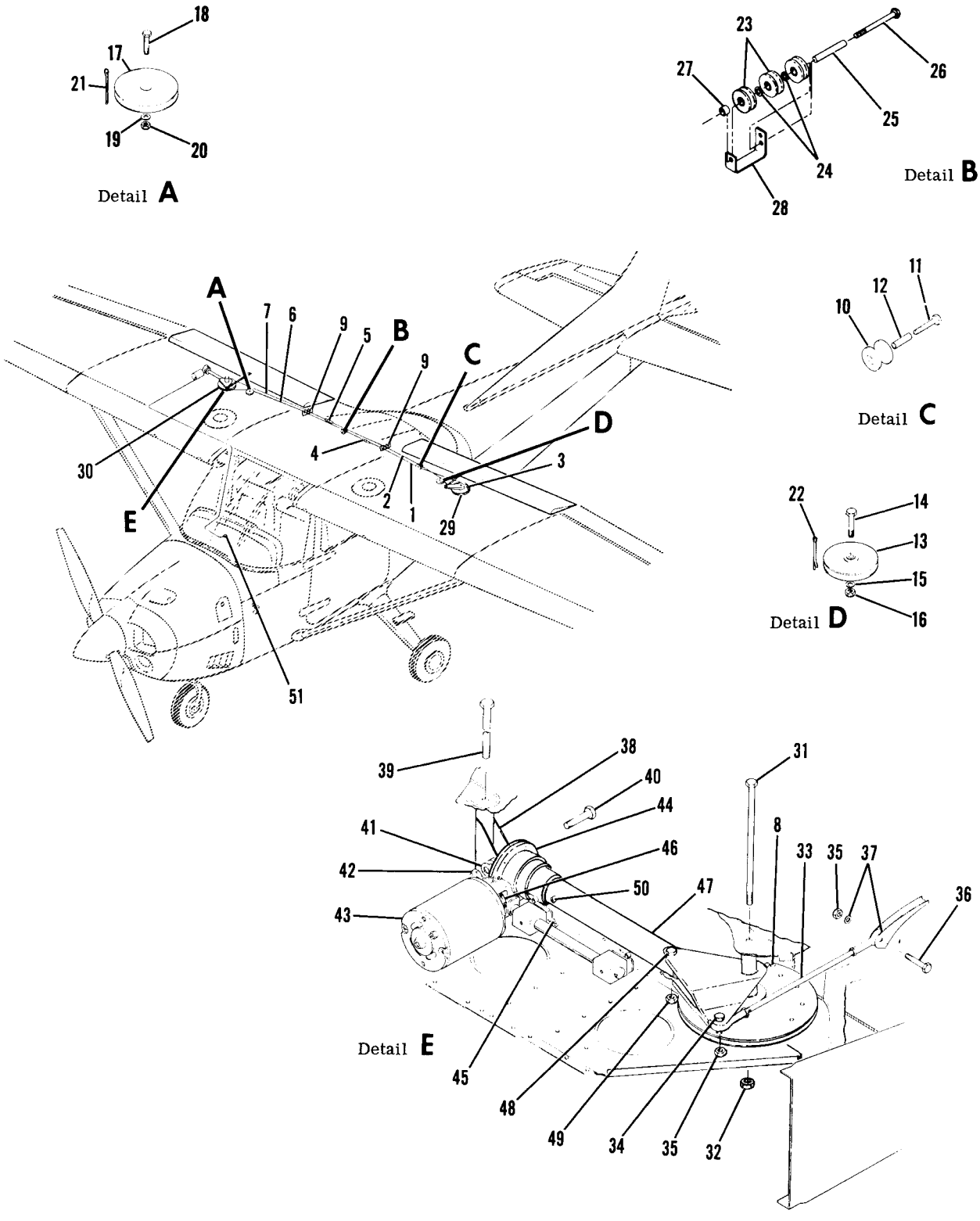

Figure 83. Electric Flap System Installation

FIGURE AND INDEX NO.	PART NUMBER	DESCRIPTION 1 2 3 4 5 6 7	UNITS PER ASSY	USABLE ON CODE
83 -		FLAP SYSTEM INSTALLATION-ELECTRIC	NP	A
- 1	0510105-93	CABLE ASSY-FLAP RETRACT LH	1	
	0510105-193	CABLE ASSY-FLAP RETRACT LH STAINLESS STEEL	1	
- 2	0510105-91	CABLE ASSY-FLAP DIRECT LH	1	
	0510105-191	CABLE ASSY-FLAP DIRECT LH STAINLESS STEEL	1	
		ATTACHING PARTS		
- 3	MS20392-1C11	PIN	1	
	MS24665-134	COTTER PIN	1	
- 4	AN155B16S	BARREL FLAP RETRACT ONLY	1	
- 5	AN155B32S	BARREL FLAP DIRECT ONLY	1	
		---*---		
- 6	0510105-94	CABLE ASSY-FLAP RETRACT RH	1	
	0510105-194	CABLE ASSY-FLAP RETRACT RH STAINLESS STEEL	1	
- 7	0510105-92	CABLE ASSY-FLAP DIRECT RH	1	
	0510105-192	CABLE ASSY-FLAP DIRECT RH STAINLESS STEEL	1	
		ATTACHING PARTS		
- 8	MS20392-1C11	PIN	1	
	MS24665-134	COTTER PIN	1	
		---*---		
- 9	0760616-1	RUB STRIP	2	
	0760615-1	GUARD	2	
		ATTACHING PARTS		
	AN515-8R12	SCREW	2	
	NAS679A08	NUT	2	
		---*---		
-10	S1052-1	PULLEY LH ONLY	1	
		ATTACHING PARTS		
-11	AN3-11A	BOLT	1	
-12	1260064-1	BUSHING	1	
		---*---		
-13	MS20220-2	PULLEY LH ONLY	1	
		ATTACHING PARTS		
-14	AN5-12A	BOLT	1	
-15	AN960-516L	WASHER	1	
-16	MC21042L5	NUT	1	
		---*---		
-17	S378-2	PULLEY RH ONLY	1	
		ATTACHING PARTS		
-18	AN3-6A	BOLT	1	
-19	AN960-10	WASHER	1	
-20	MS21044N3	NUT	1	
		---*---		
-21	MS24665-283	COTTER PIN	1	
-22	MS24665-285	COTTER PIN	1	
-23	S394	PULLEY	2	
		ATTACHING PARTS		
-24	AN960-416	WASHER	2	
-25	0512138	BUSHING	1	
-26	AN3-21A	BOLT	1	
-27	NAS43HT4-16	SPACER	1	
-28	0512136	GUARD	1	
		---*---		
-29	0760612-7	DRIVE PULLEY ASSY-LH	1	
-30	0762024-24	DRIVE PULLEY ASSY-RH	1	
		ATTACHING PARTS		
-31	AN4-56A	BOLT	1	
	0523536-1	BUSHING	1	
	0522629-1	WASHER	1	
-32	MS21042L4	NUT	1	
		---*---		
	B610	BEARING TOR	2	

CONTINUED ON NEXT PAGE

FIGURE AND INDEX NO.	PART NUMBER	DESCRIPTION 1 2 3 4 5 6 7	UNITS PER ASSY	USABLE ON CODE
83 -33	0523537	ROD ASSY	2	
		ATTACHING PARTS		
-34	AN3-6A	BOLT	1	
-35	MS21044N3	NUT	1	
-36	AN3-10A	BOLT	1	
-37	AN960-10	WASHER 2 EACH SIDE OF ROD END	5	
		---*---		
-38	0760619-1	HINGE ASSY-FLAP MOTOR	1	
		ATTACHING PARTS		
-39	AN4-56A	BOLT	1	
	0523536-1	BUSHING	1	
	0522629-1	WASHER	1	
	MS21042L4	NUT	1	
		---*---		
	B610	BEARING TOR	2	
	C301002-0301	ACTUATOR & MOTOR ASSY INTERNAL FILTERED	1	
		ATTACHING PARTS		
-40	AN6-15A	BOLT	1	
-41	AN960-616	WASHER	1	
-42	MS21042L6	NUT	1	
		---*---		
-43	C301002-0103	MOTOR-FLAP ACTUATOR INTERNAL FILTERED	1	
-44	C301002-0308	ACTUATOR & SWITCH BAR ASSY	1	
-45	V3L-3-09	SWITCH	2	
		ATTACHING PARTS		
	AN515-4-9	SCREW	2	
	AN936A4	WASHER	2	
		---*---		
-46	C301001-0211	COUPLING-ACTUATOR	1	
-47	0760620-1	TUBE ASSY-FLAP ACTUATOR	1	B
	0760620-9	TUBE ASSY-FLAP ACTUATOR	1	C
		ATTACHING PARTS		
-48	AN4-15	BOLT	1	
	0760614-1	BUSHING	1	
-49	AN310-4	NUT	1	
	MS24665-134	COTTER PIN	1	
		---*---		
	S500-1	BEARING-OILITE	1	
-50	AN565D8H3	SETSCREW	1	B
	AN565B428H4	SETSCREW	1	C
-51	SEE FIG 85	FLAP CONTROL DETAIL INSTALLATION	1	

A---182 SERIAL 18262466 & ON
B---182 SERIAL 18262466 THRU 18262541 & 18262545
C---182 SERIAL 18262542 THRU 18262544, 18262546 & ON

FIGURE AND INDEX NO.	PART NUMBER	DESCRIPTION 1 2 3 4 5 6 7	UNITS PER ASSY	USABLE ON CODE
84 -		FLAP CONTROLS DETAIL INSTALLATION	NP	
- 1	1512280-13	LEVER ASSEMBLY-FLAP	1	
	1512280-11	LEVER-FLAP	1	
- 2	1452530-6	CAM	1	
- 3	1562033-13	ARM ASSEMBLY-FLAP	1	
	0762050-1	ARM	1	
- 4	1562033-4	INDICATOR ASSEMBLY	1	
- 5	NAS75-3-016	BUSHING	1	
- 6	1512280-24	BUSHING	2	
- 7	1452533-4	WASHER	1	
- 8	0762049-1	BRACKET	3	
- 9	1512280-25	WASHER	1	
-10	1452533-2	WASHER	2	
-11	S1906-1	SWITCH		
		ATTACHING PARTS		
-12	AN515-4R12	SCREW	2	
-13	NAS620-4	WASHER	2	
-14	AN340-4	NUT	2	
		---*---		
-15	1262001-1	BRACKET	1	
-16	AN3-11A	BOLT	1	
-17	MS21044N3	NUT	1	
-18	S1771-3	KNOB	1	
-19	0762039-1	ARM ASSEMBLY	1	
		ATTACHING PARTS		
-20	AN3-5A	BOLT	1	
	AN960-10L	WASHER	2	
	MS20364-1032C	NUT	1	
		---*---		

CONTINUED ON NEXT PAGE

Flight Controls (Cont)

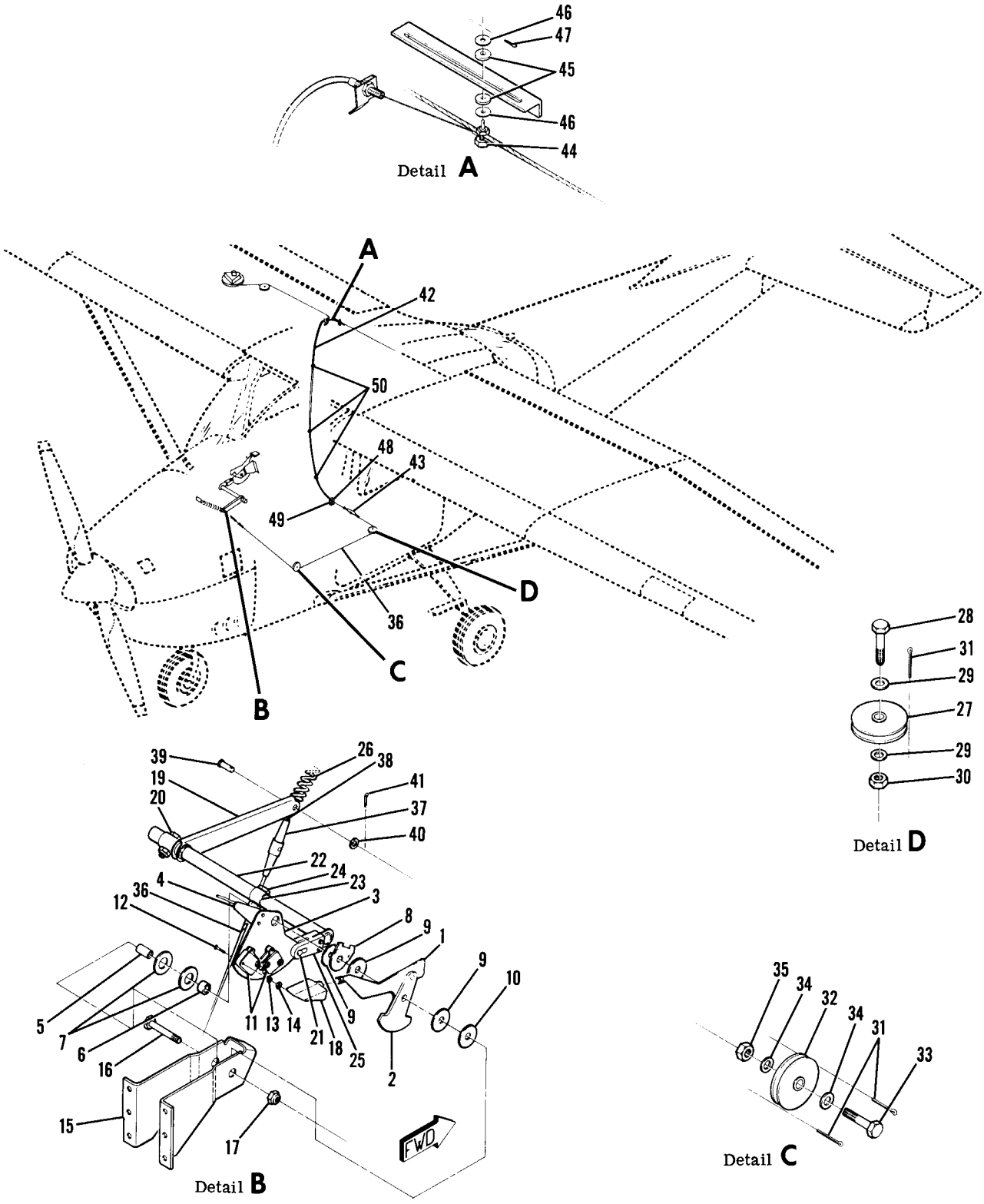

Figure 84. Flap Control Detail Installation

FIGURE AND INDEX NO.	PART NUMBER	DESCRIPTION 1 2 3 4 5 6 7	UNITS PER ASSY	USABLE ON CODE
84 -21	MS20392-2C19	PIN	1	
	AN960-10L	WASHER	2	
	MS24665-132	PIN-COTTER	1	
-22	0762038-1	TUBE ASSEMBLY-TORQUE	1	
		ATTACHING PARTS		
-23	0762041-1	COLLAR	1	
-24	AN3-5A	BOLT	1	
	AN960-10L	WASHER	2	
	MS20364-1032C	NUT	1	
		---*---		
-25	0762038-2	BELLCRANK	1	
-26	0762040-1	SPRING	1	
-27	S378-1	PULLEY	1	
		ATTACHING PARTS		
-28	AN3-7A	BOLT	1	
-29	AN960-10	WASHER	2	
-30	MS21044N3	NUT	1	
		---*---		
-31	MS24665-136	PIN-COTTER	3	
-32	S378-1	PULLEY	1	
		ATTACHING PARTS		
-33	AN3-10A	BOLT	1	
-34	AN960-10L	WASHER	1	
-35	MS21044N3	NUT	1	
		---*---		
-36	0510105-231	CABLE ASSEMBLY	1	
		ATTACHING PARTS		
-37	AN155B8S	BARREL	1	
-38	AN161-8LS	FORK	1	
-39	MS20392-2C11	PIN	1	
-40	AN960-10L	WASHER	1	
-41	MS24665-132	PIN-COTTER	1	
		---*---		
-42	S2083-1	CONTROL ASSEMBLY	1	
		ATTACHING PARTS		
-43	AN3-4A	BOLT	1	
	AN960-10L	WASHER	1	
	MS21044N3	NUT	1	
-44	0762048-1	UNION	1	
-45	S2202-3	WASHER	2	
-46	NAS70-177-500	WASHER	2	
-47	MS24665-132	COTTER PIN	1	
-48	0713307-2	CLAMP	2	
-49	AN3-13A	BOLT	2	
	AN960-10L	WASHER	2	
-50	S1693-1	STA STRAP	3	
		---*---		

Flight Controls (Cont)

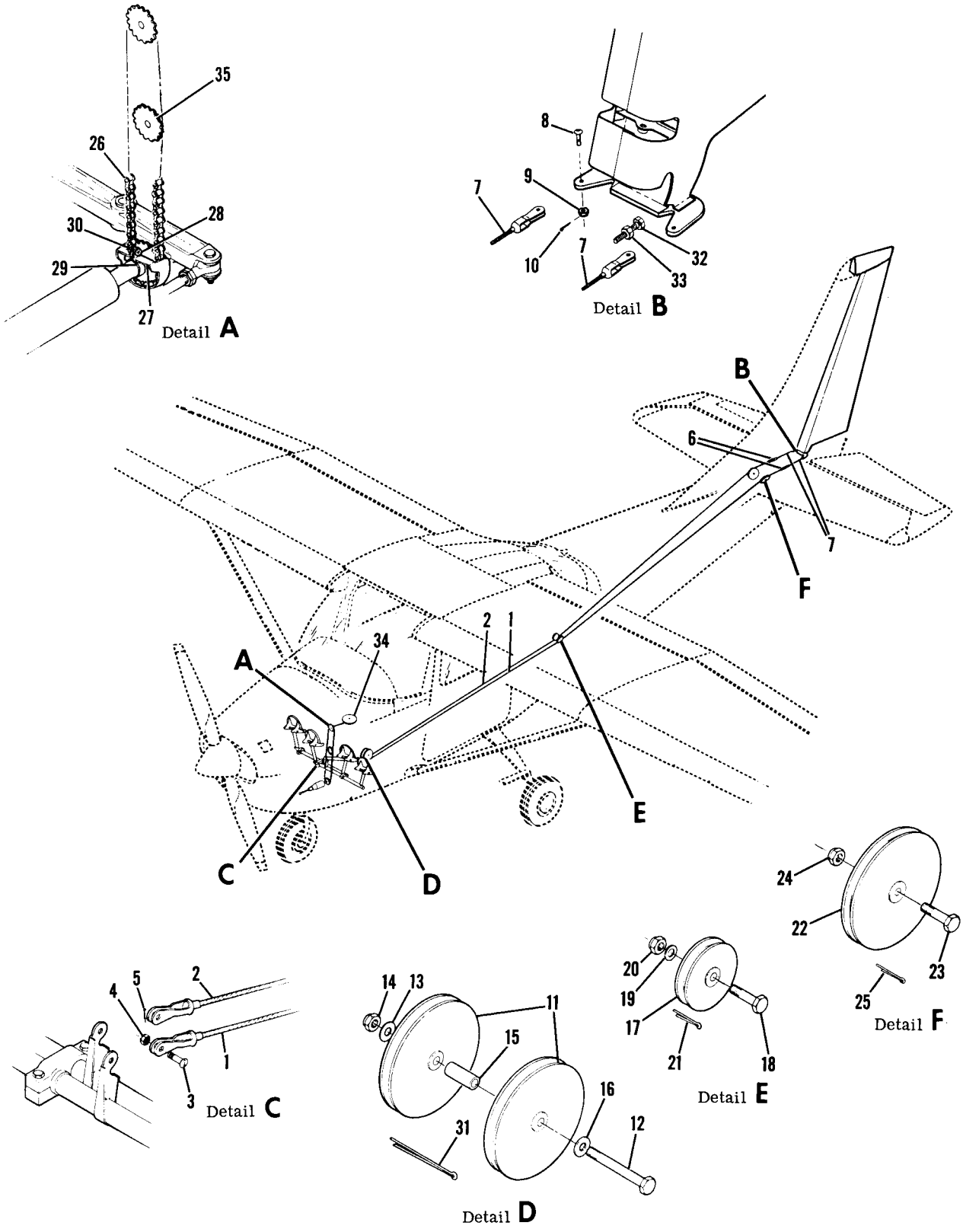

Figure 85. Rudder Control System Installation

FIGURE AND INDEX NO.	PART NUMBER	DESCRIPTION 1 2 3 4 5 6 7	UNITS PER ASSY	USABLE ON CODE
85 -		RUDDER CONTROL SYSTEM INSTALLATION	NP	
- 1	0510105-77	CABLE ASSEMBLY-FWD LH	1	
	0510105-177	CABLE ASSEMBLY-FWD LH STAINLESS STEEL	1	
- 2	0510105-78	CABLE ASSEMBLY-FWD RH	1	
	0510105-178	CABLE ASSEMBLY-FWD RH STAINLESS STEEL	1	
		ATTACHING PARTS		
- 3	AN23-10A	BOLT	1	
- 4	AN310-3	NUT	1	
- 5	MS24665-134	PIN-COTTER	1	
- 6	AN155832S	BARREL	1	
		---*---		
- 7	1260105-9	CABLE ASSEMBLY-RUDDER AFT	2	
	1260105-109	CABLE ASSEMBLY-RUDDER AFT STAINLESS STEEL	2	
		ATTACHING PARTS		
- 8	AN23-10	BOLT	1	
- 9	AN310-3	NUT	1	
-10	MS24665-134	PIN-COTTER	1	
		---*---		
-11	S378-4	PULLEY	2	
		ATTACHING PARTS		
-12	AN4-22A	BOLT	1	
-13	AN960-416L	WASHER	1	
-14	MS21042L4	NUT	1	
-15	NAS43HT4-55	SPACER	1	
-16	AN960-416	WASHER	1	
		---*---		
-17	S378-3L	PULLEY	2	
		ATTACHING PARTS		
-18	AN4-10A	BOLT	1	
-19	AN960-416L	WASHER	1	
-20	MS21042L4	NUT	1	
		---*---		
-21	MS24665-136	PIN-COTTER	2	
-22	S378-4	PULLEY	2	
		ATTACHING PARTS		
-23	AN4-10A	BOLT	1	
-24	MS21042L4	NUT	1	
		---*---		
-25	MS24665-134	PIN-COTTER	1	
-26	0760667-2	CHAIN ASSEMBLY	1	
-27	0760671-1	GUARD	1	
		ATTACHING PARTS		
-28	AN3-3A	BOLT	1	
-29	AN735-9	CLAMP	1	
-30	MS21044N3	NUT	1	
	0760128-1	STOP	1	
		---*---		
-31	MS24665-143	PIN-COTTER	1	
-32	NAS428H3-6	BOLT-RUDDER STOP	2	
-33	AN315-3R	NUT-RUDDER STOP	2	
-34	SEE FIG 79	CONSOLE INSTALLATION	NP	
-35	SEE FIG 79	SPROCKET-IDLER	1	

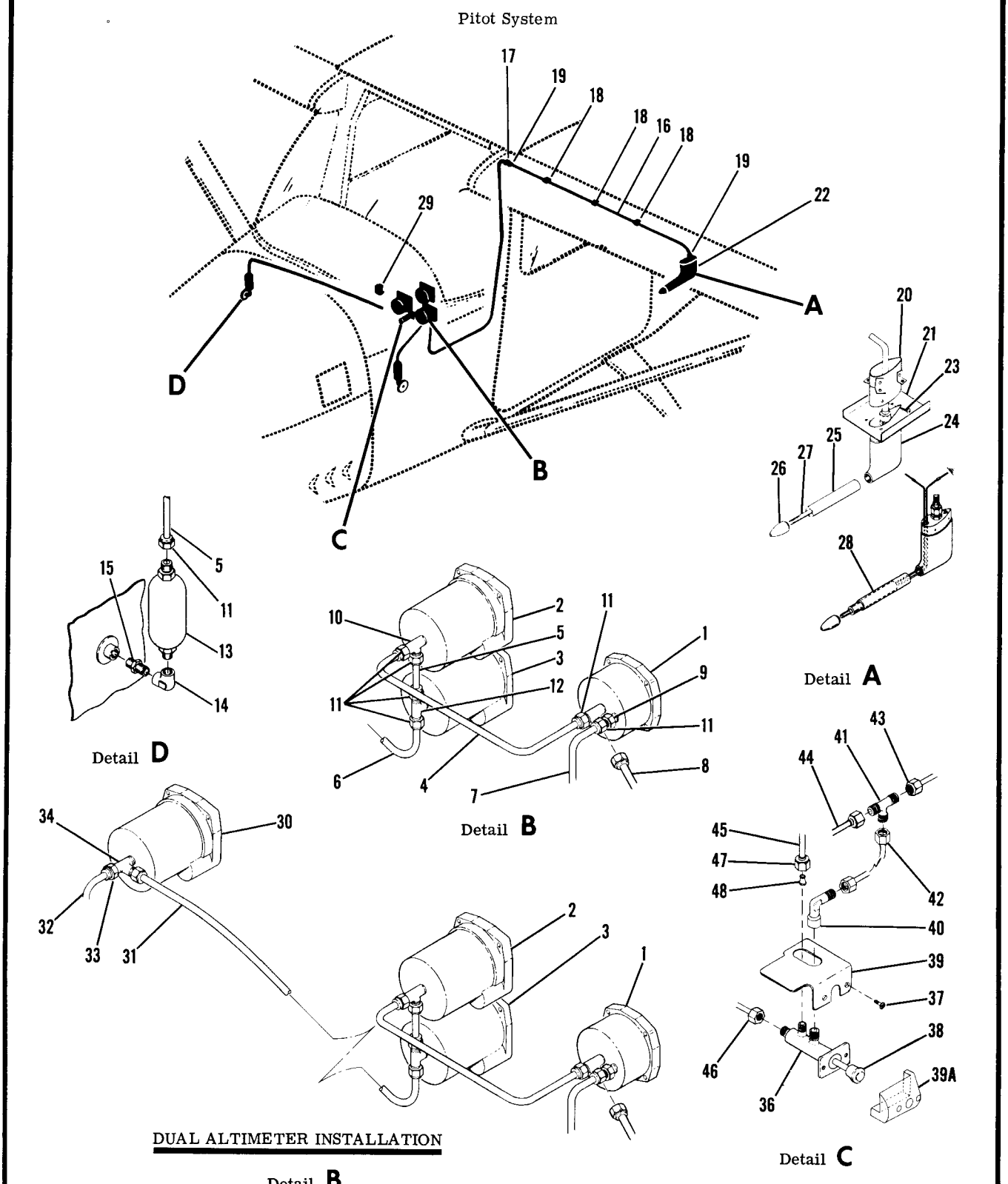

Figure 86. Pitot System Installation

FIGURE AND INDEX NO.	PART NUMBER	DESCRIPTION 1 2 3 4 5 6 7	UNITS PER ASSY	USABLE ON CODE
86 -		SYSTEM INSTALLATION-PITOT	NP	A
- 1	SEE FIG 55	INDICATOR-AIRSPEED	1	
		ATTACHING PARTS		
	AN515B6R12	SCREW	4	
		---*---		
- 2	SEE FIG 55	ALTIMETER	1	
		ATTACHING PARTS		
	AN515B6R12	SCREW	3	
		---*---		
- 3	SEE FIG 55	INDICATOR-VERTICAL SPEED	1	
		ATTACHING PARTS		
	AN515B6R12	SCREW	3	
		---*---		
- 4	S1071-1	TUBE-POLYETHLENE 8.00 IN LG BKI REF S1071-1-8.00	1	
- 5	S1071-1 *	TUBE-POLYETHLENE 2.50 IN LG BKI REF S1071-1-2.50	1	
	S1071-1 **	TUBE-POLYETHLENE 62.00 IN LG BKI REF S1071-1-62.00	1	
- 6	S1071-1	TUBE-POLYETHLENE 58.00 IN LG BKI REF S1071-1-58.00	1	
- 7	S1071-1	TUBE-POLYETHLENE 48.00 IN LG BKI REF S1071-1-48.00	1	
- 8	S1071-1	TUBE-POLYETHLENE 16.00 IN LG BKI REF S1071-1-16.00	1	
- 9	S1133-1	CONNECTOR	1	
-10	S1139-1	TEE	2	
-11	S1130-1	NUT TUBE END FITTING	10	
	S1131-1	INSERT TUBE END FITTING	10	
-12	S1138-1	TEE	1	
-13	S1258-1	SUMP-STATIC SOURCE	2	
		ATTACHING PARTS		
-14	AN916-1D	ELBOW	1	
-15	AN911-1D	NIPPLE	1	
		---*---		
-16	S1071-1	TUBE-POLYETHLENE 63.7 IN LG BKI REF S1071-1-63.7	1	
		ATTACHING PARTS		
-17	S1132-1	UNION	1	
-18	AN742D4	CLAMP	3	
	NAS395-16-3	NUT	3	
	S1021Z8-8	SCREW	3	
		---*---		
-19	S1130-1	NUT	2	
	S1131-1	INSERT	2	
-20	0721115-1	CONNECTOR ASSY-PITOT TUBE	1	
-21	0721114-2	DOUBLER	1	
-22	0721105-14	TUBE ASSY-PITOT	1	
	0721105-15	TUBE ASSY-PITOT HEATED	1	
		ATTACHING PARTS		
-23	AN507-640R4	SCREW	4	
		---*---		
-24	0721105-13	BODY-PITOT TUBE	1	
	S1133-2	CONNECTOR-NYLON	1	
-25	0721105-3	TUBE-PITOT	1	
-26	0721105-4	NOSE FITTING-PITOT TUBE	1	
-27	0721105-8	STEM-PITOT TUBE	1	
-28	0721105-5	HEATER ASSY-PITOT	1	
-29	S2160-1	SWITCH-PITOT HEATER	1	
		DUAL ALTIMETER INSTALLATION	NP	
-30		ALTIMETER SEE INSTRUMENT PANEL	1	
-31	S1071-1	TUBE-POLYETHLENE #IN LG BKI REF S1071-1-#	1	
-32	S1071-1	TUBE-POLYETHLENE #IN LG BKI REF S1071-1-#	1	
-33	S1130-1	NUT	2	
	S1131-1	INSERT	2	
-34	S1138-1	TEE USED WITH STD STATIC SOURCE	1	
	S1135-1	ELBOW USED WITH ALT STATIC SOURCE	1	

CONTINUED ON NEXT PAGE

FIGURE AND INDEX NO.	PART NUMBER	DESCRIPTION 1 2 3 4 5 6 7	UNITS PER ASSY	USABLE ON CODE
86 -35		STATIC SOURCE INSTALLATION-ALTERNATE	NP	
-36	2013142-1	VALVE-ALTERNATE STATIC SOURCE	1	
		ATTACHING PARTS		
-37	AN507-832R7	SCREW	2	
	MS21044N08	NUT	2	
		---*---		
-38	S1981-5	KNOB ASSY	1	
-39	0701028-2	BRACKET	1	
		ATTACHING PARTS		
	AN515-8R6	SCREW	2	
	NAS679A08	NUT	2	
		---*---		
-39A	1213752-1	KNEE BUMPER	1	B
-40	S2071-1	ELBOW	1	
-41	S1137-1	TEE	1	
-42	S1071-1	TUBE-POLYETHYLENE #IN LG BKI REF S1071-1-#	1	
-43	S1071-1	TUBE-POLYETHYLENE #IN LG BKI REF S1071-1-#	1	
-44	S1071-1	TUBE-POLYETHYLENE #IN LG BKI REF S1071-1-#	1	
-45	S1071-1	TUBE-POLYETHYLENE 6.0 IN LG BKI REF S1071-1-6.0	1	
-46	S1071-1	TUBE-POLYETHYLENE #IN LG BKI REF S1071-1-#	1	
-47	S1130-1	NUT	10	
-48	S1131-1	INSERT	10	
		NOTE. *USED ONLY ON AIRCRAFT WITH VERTICAL SPEED INDICATOR INSTALLED.		
		NOTE. **USED ONLY ON AIRCRAFT THAT DO NOT HAVE VERTICAL SPEED INDICATOR INSTALLED.		
		NOTE. #TUBE LENGTHS TO BE ADDED LATER		
		A---182 SERIAL 18262466 & ON		
		B---182 SERIAL 18263357 & ON		

This page intentionally left blank.

Encoding Altimeter

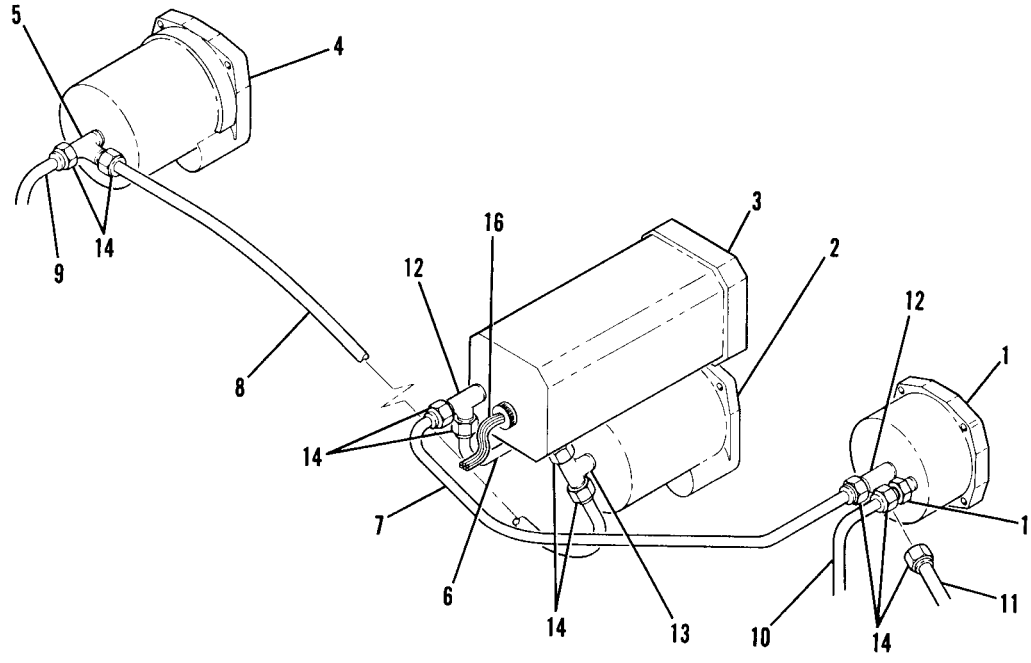

182 SERIAL 18263476 & ON

Figure 86A. Encoding Altimeter Installation

FIGURE AND INDEX NO.	PART NUMBER	DESCRIPTION 1 2 3 4 5 6 7	UNITS PER ASSY	USABLE ON CODE
86A-		ENCODING ALTIMETER INSTALLATION	NP	A
- 1	SEE FIG 55	INDICATOR-AIRSPEED	1	
- 2	SEE FIG 55	INDICATOR-VERTICAL SPEED	1	
- 3	42540-2114	ALTIMETER-ENCODING 20,000 FT FT & INCHES SKYLANE ONLY	1	
	42540-2214	ALTIMETER-ENCODING 20,000FT FT & MILLIBARS SKYLANE ONL	1	
		ATTACHING PARTS		
	AN515B6R7	SCREW	3	
	AN936A416B	WASHER	3	
		---*---		
- 4	C661071-0101	ALTIMETER 20,000 FT FT & INCHES	1	
	C661071-0102	ALTIMETER 20,000 FT FT & MILLIBARS	1	
		ATTACHING PARTS		
	AN515B6R16	SCREW	3	
		---*---		
- 5	S1138-1	TEE USED WITH STD STATIC SOURCE	1	
	S1135-1	ELBOW USED WITH ALT STATIC SOURCE	1	
- 6	S1071-1	TUBE-POLYETHLENE # IN LG BKI REF S1071-1-#	1	
- 7	S1071-1	TUBE-POLYETHLENE # IN LG BKI REF S1071-1-#	1	
- 8	S1071-1	TUBE-POLYETHELENE # IN LG BKI REF S1071-1-#	1	
- 9	S1071-1	TUBE-POLYETHLENE # IN LG BKI REF S1071-1-#	1	
-10	S1071-1	TUBE-POLYETHLENE 48.00 IN LG BKI REF S1071-1-48.00	1	
-11	S1071-1	TUBE-POLYETHLENE 16.00 IN LG BKI REF S1071-1-16.00	1	
-12	S1139-1	TEE	2	
-13	S1138-1	TEE	1	
-14	S1130-1	NUT	10	
	S1131-1	INSERT	10	
-15	S1133-1	CONNECTOR	1	
-16		CABLE ASSY SEE ELECTRONICS MANUAL	1	

A---182 SERIAL 18263476 & ON

FIGURE AND INDEX NO.	PART NUMBER	DESCRIPTION 1 2 3 4 5 6 7	UNITS PER ASSY	USABLE ON CODE
87 -		FUEL SYSTEM INSTALLATION	NP	
- 1	0716127-1	LINE-FUEL TANK VENT	1	
	1200106-51	LINE-FUEL TANK VENT EXTENDED RANGE ONLY	1	
		ATTACHING PARTS		
- 2	S1495-8	HOSE 2.00 IN LG BULK ITEM REF S1495-8-2.00	1	
	NAS397-14	CLAMP	2	
	AN737RM30	CLAMP	1	
- 3	S1486DG8U	CLAMP	2	
	S1021Z8-8	SCREW	2	
- 4	MS35489-4	GROMMET	2	
		---*---		
- 5	0700099-85	LINE ASSEMBLY-FUEL TANK VENT CARRY THRU	1	
- 6	0716616-1	LINE ASSEMBLY-FUEL TANK TO VENT CARRY THRU STD WING	2	
- 7	0716622-1	VENT ADAPTER ASSEMBLY EXTENDED RANGE ONLY	2	
- 8	0700099-46	FUEL LINE LH	1	
- 9	0700099-47	FUEL LINE RH	1	
-10	0716617-1	LINE ASSEMBLY-FUEL TANK TO UNION FORWARD LH	1	
-11	0716617-2	LINE ASSEMBLY-FUEL TANK TO UNION FORWARD RH	1	
		ATTACHING PARTS		
-11A	MS219219DG-8	CLAMP	1	
	AN509-8R14	SCREW	1	
	NAS43HT3-16	SPACER	1	
	NAS679A08	NUT	1	
		---*---		
-11B	S292-14	HOSE 2.00 IN LG BKI REF S292-14-2.00	2	
-12	0700099-105	LINE ASSEMBLY-FUEL LH UPPER	1	
-12A	0700099-107	LINE ASSEMBLY-FUEL LH LOWER	1	
-13	0700099-104	LINE ASSEMBLY-FUEL RH UPPER	1	
-13A	0700099-106	LINE ASSEMBLY-FUEL RH LOWER	1	
		ATTACHING PARTS		
-14	AN815-8D	UNION	2	
	S51-8-10	HOSE	1	
	S1693-2	STA-STRAP	2	
	MS21919DG8	CLAMP	2	
	S1021Z8-8	SCREW	2	
		---*---		
-15	S1495-6	HOSE 3.00 IN LG BULK ITEM REF S1495-6-3.00	6	
		ATTACHING PARTS		
	NAS397-12	CLAMP	2	
		---*---		
-16	S1891-10	CLAMP BC	2	
-17	S1495-8	HOSE 2.50 IN LG BULK ITEM REF S1495-8-2.50	4	
		ATTACHING PARTS		
	S1891-10	CLAMP AFT FUEL TANK BC	2	
	NAS397-10	CLAMP FORWARD FUEL TANK	2	
		---*---		
-18	0700099-94	LINE ASSEMBLY-UNION TO TEE	2	
	MS35489-49	GROMMET	2	
-19	AN815-8D	UNION	2	
-20	0700099-21	LINE ASSEMBLY-UNION TO TEE FORWARD LH	2	
-21	AN804D8	TEE	2	
	AN924-8D	NUT	2	
	AN960-1216L	WASHER FORWARD OF BULKHEAD	2	
	AN960-1216L	WASHER AFT OF BULKHEAD	2	

CONTINUED ON NEXT PAGE

Fuel System (Cont)

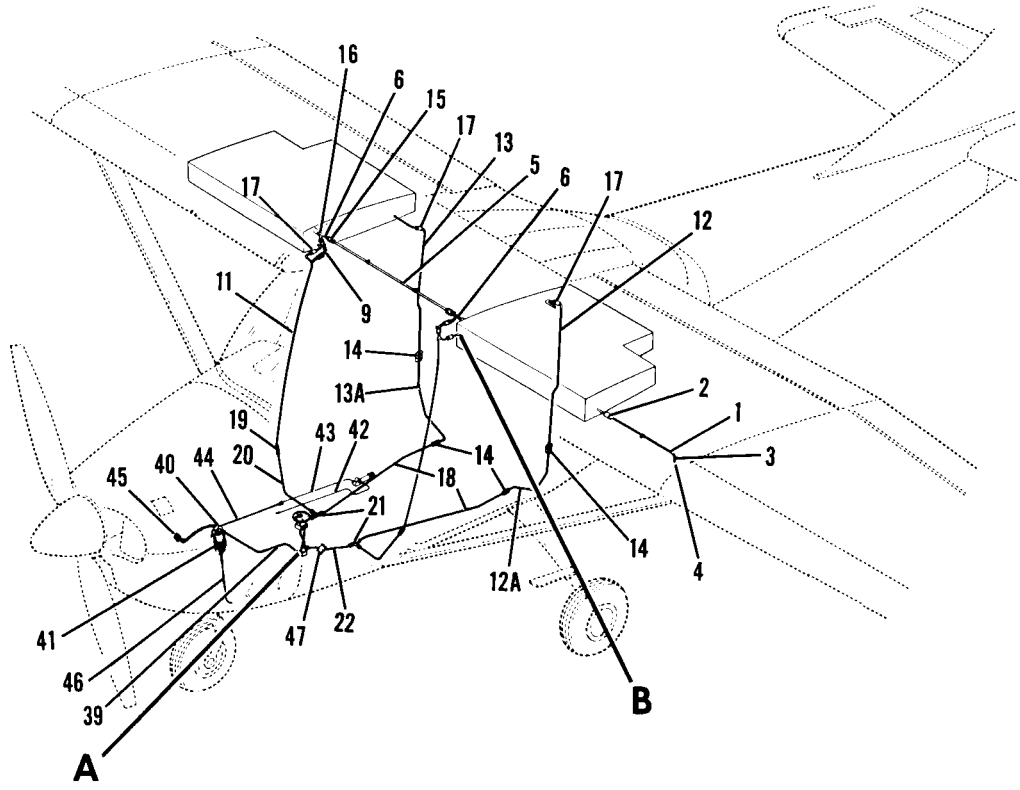

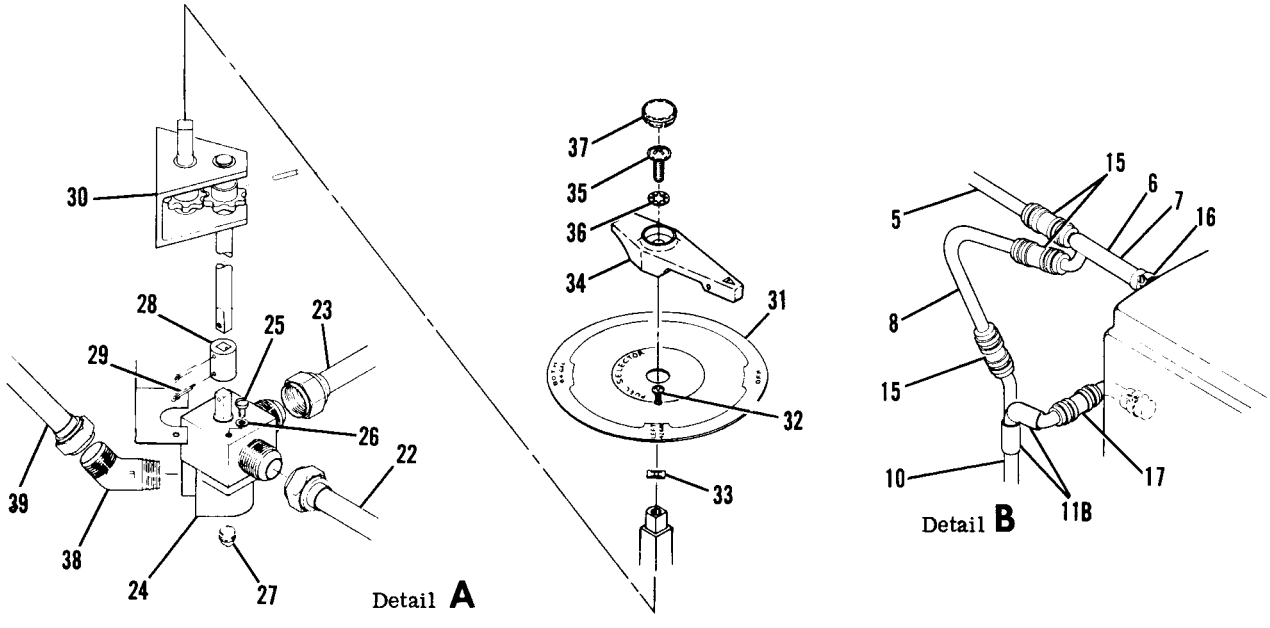

Figure 87. Fuel System Installation

FIGURE AND INDEX NO.	PART NUMBER	DESCRIPTION 1 2 3 4 5 6 7	UNITS PER ASSY	USABLE ON CODE
87 -22	0700099-15	LINE ASSEMBLY TEE TO SELECTOR VALVE LH	1	
-23	0700099-16	LINE ASSEMBLY TEE TO SELECTOR VALVE RH	1	
-24	0716613-1	SELECTOR VALVE-FUEL	1	
	5037-1	SELECTOR VALVE-FUEL ALT	1	
		ATTACHING PARTS		
-25	AN500-10-10	SCREW	2	
-26	AN935-10	WASHER	2	
		---*---		
	0716613-200	KIT-SPARE O RING	1	
-27	MS20913-1D	PLUG	1	
-28	0716611-1	COUPLING-SELECTOR VALVE SHAFT	1	
		ATTACHING PARTS		
-29	MS24665-134	COTTER PIN	2	
		---*---		
-30	0716607-3	GEAR ASSEMBLY-SELECTOR VALVE	1	
		ATTACHING PARTS		
	AN520-10R8	SCREW	2	
	MS21044N3	NUT	2	
		---*---		
-31	0716615-1	PLACARD-FUEL SELECTOR WEU 0705048-4	1	
	0705048-4	PLACARD-FUEL SELECTOR	1	
	0716615-2	PLACARD-FUEL SELECTOR EXTENDED RANGE WEU 0705048-5	1	
	0705048-5	PLACARD-FUEL SELECTOR EXTENDED RANGE	1	
		ATTACHING PARTS		
-32	S1021Z4-4C	SCREW	2	
-33	NAS446-1-3	NUT	2	
		---*---		
-34	0716623-2	HANDLE-FUEL SELECTOR VALVE	1	
		ATTACHING PARTS		
-35	AN525-832R6	SCRREW	1	
-36	AN936A8	WASHER	1	
		---*---		
-37	0716624-1	CAP	1	
-38	MS20823-8D	ELBOW	1	
-39	0700099-34	LINE ASSY-SELECTOR VALVE TO FUEL STRAINER	1	
	MS35489-20	GROMMET	1	
-40	MS20823-8D	ELBOW	1	
	0750032-1	SHIELD	1	
	S354-3	GROMMET	1	
-41	SEE FIG 88	STRAINER ASSY	1	
-42	0700099-2	LINE ASSY-PRIMER	1	
-43	0700099-3	LINE ASSY-PRIMER	1	
-44	0700099-81	LINE ASSY-PRIMER FIREWALL TO STRAINER	1	
	AN816-2D	NIPPLE	1	
-45	S1167-8-0120	HOSE ASSY-STRAINER TO ENGINE	1	
	MS20822-8D	ELBOW AT STRAINER	1	
	8-4VTX-S	ELBOW AT CARBURETOR	1	
-46	0700099-97	LINE ASSY-DRAIN	1	
-47	0760026-1	GUARD-ELEVATOR CABLE	2	
		ATTACHING PARTS		
	AN742D8	CLAMP	2	
	AN525-10R7	SCREW	2	
	MS21044N3	NUT	2	
		---*---		

Fuel System (Cont)

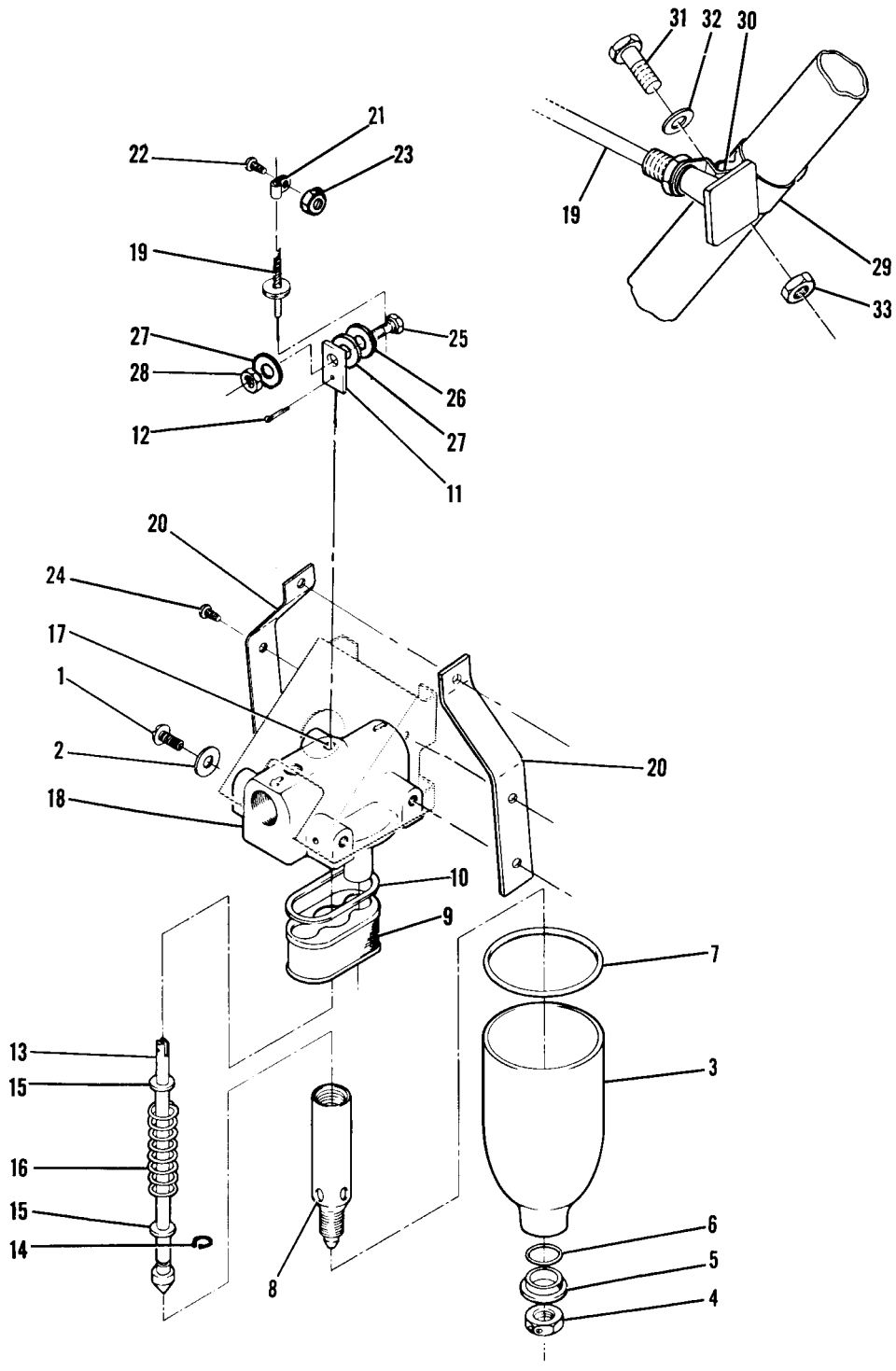

Figure 88. Fuel Strainer & Drain Control Installation

FIGURE AND INDEX NO.	PART NUMBER	DESCRIPTION 1 2 3 4 5 6 7	UNITS PER ASSY	USABLE ON CODE
88 -	0756005-1	STRAINER ASSEMBLY-FUEL	1	
		ATTACHING PARTS		
- 1	AN515-10R8	SCREW	4	
- 2	AN936A10	WASHER	4	
		---*---		
- 3	0756008-1	BOWL-FUEL STRAINER	1	
		ATTACHING PARTS		
- 4	S1573-3	NUT	1	
- 5	0756015-1	WASHER	1	
- 6	MS29513-111	O RING	1	
- 7	MS29513-138	O RING	1	
		---*---		
- 8	0756011-1	STANDPIPE	1	
- 9	0756009-1	FILTER ASSEMBLY-FUEL STRAINER	1	
-10	0756009-8	GASKET	1	
-11	0756014-1	PLATE	1	
		ATTACHING PARTS		
-12	MS24665-132	COTTER PIN	1	
		---*---		
-13	0756010-1	PLUNGER ASSEMBLY-DRAIN	1	
-14	MS16624-1025	SNAP-RING	1	
-15	0756014-2	WASHER	1	
-16	0756012-1	SPRING	1	
-17	MS29513-10	O RING	1	
-18	0756005-2	TOP ASSEMBLY-FUEL STRAINER	1	
-19	S1517-2	CONTROL ASSY-STRAINER DRAIN	1	
		ATTACHING PARTS		
-20	0716136-1	BRACKET	1	
-21	MS2095-02	CLAMP	1	
-22	AN520-10R8	SCREW	1	
-23	MS21044N3	NUT	1	
-24	AN525-10R8	SCREW	2	
	MS21044N3	NUT	2	
-25	0450311-3	CLAMP	1	
-26	AN960-416	WASHER	1	
-27	AN960-416L	WASHER	2	
-28	MS21042L4	NUT	1	
-29	0750230-1	CLAMP	1	
-30	AN741TD7	CLAMP	1	
-31	AN4-6A	BOLT	2	
-32	AN960-10L	WASHER	2	
-33	MS21042L4	NUT	2	
	MS21919DG3	CLAMP	2	
	NAS446-4-3	NUT	1	
	NAS43DD3-23	SPACER	1	
	S1021Z8-14	SCREW	1	
	S1021Z8-6	SCREW	1	
		---*---		

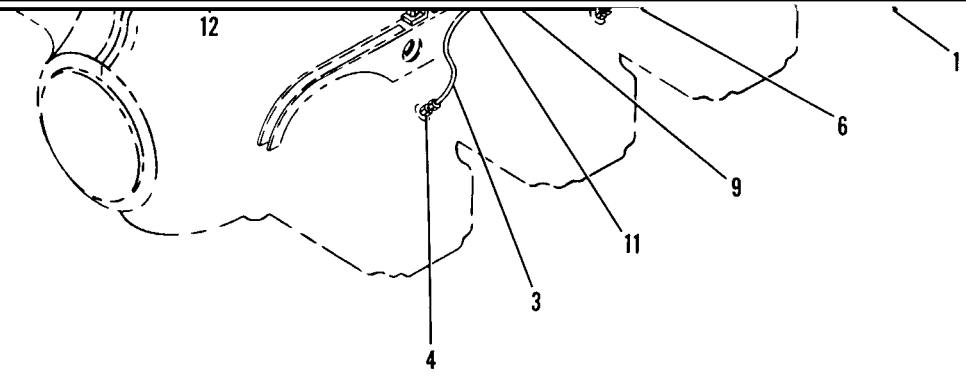

Figure 89. Fuel Primer System Installation

Oil System

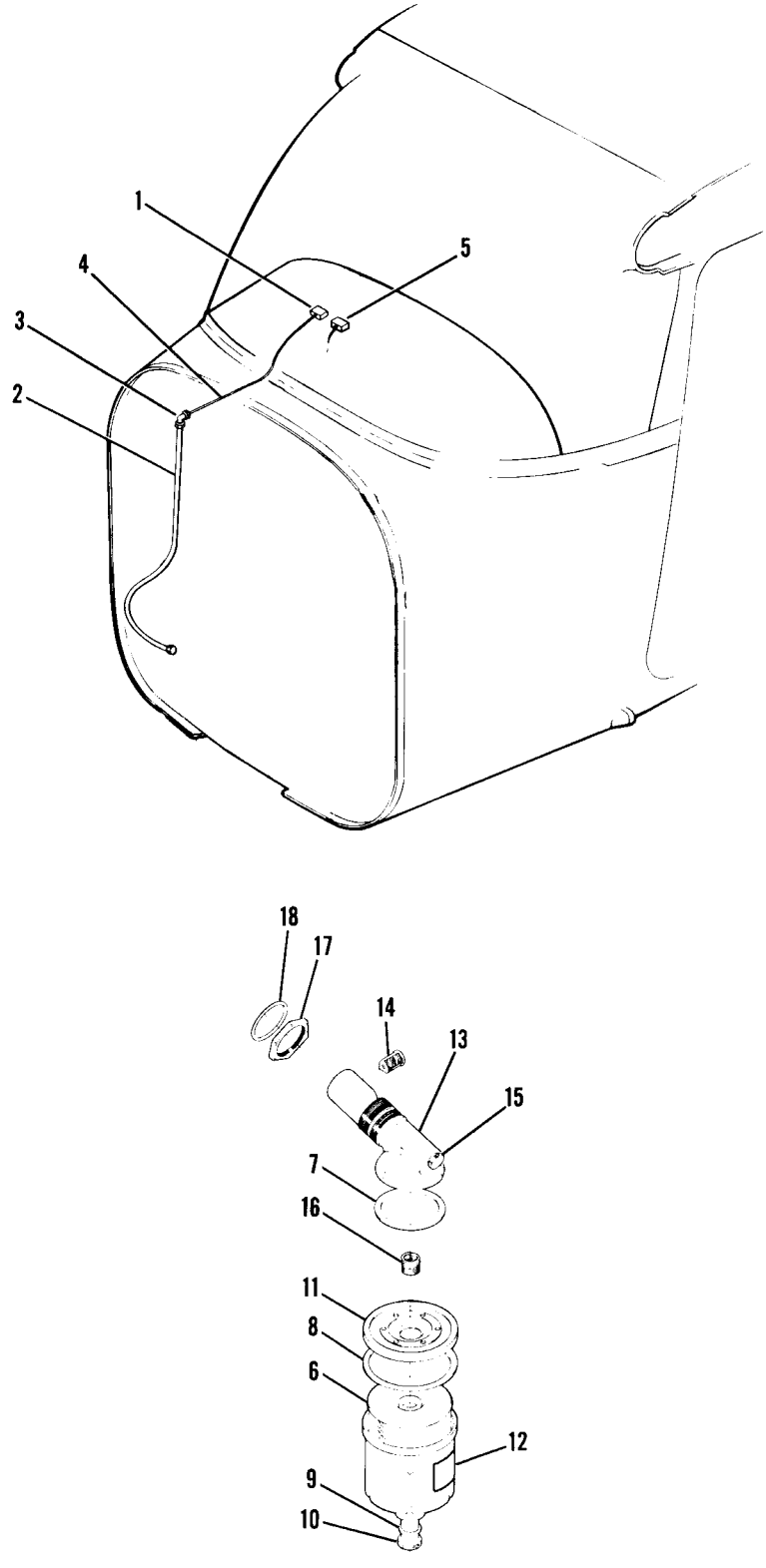

Figure 90. Oil System Installation

FIGURE AND INDEX NO.	PART NUMBER	DESCRIPTION 1 2 3 4 5 6 7	UNITS PER ASSY	USABLE ON CODE
90 -		OIL SYSTEM INSTALLATION	NP	
- 1	G444627	GAGE-OIL PRESSURE	1	
- 2	S1167-4-0388	HOSE ASSY-OIL PRESSURE FIREWALL TO ENGINE	1	
		ATTACHING PARTS		
- 3	AN837-4D	ELBOW	1	
	AN960D716	WASHER	1	
	AN924-4D	NUT	1	
		---*---		
- 4	0700099-37	LINE ASSY-OIL PRESSURE	1	
- 5	442785	GAGE-OIL TEMPERATURE	1	
		OIL FILTER INSTALLATION	NP	
	C294505-0101	OIL FILTER ASSY	1	
- 6	C294505-0102	FILTER ELEMENT KIT	1	
- 7	6436635	GASKET-UPPER AC	1	
- 8	6436637	GASKET-LOWER AC	1	
- 9	5579654	GASKET-METAL AC	1	
-10	6436916	STUD-CENTER	1	
-11	6436989	LID-OIL FILTER	1	
-12	1250410-3	PLACARD-OIL FILTER	1	
-13	1250922-2	ADAPTER ASSY-OIL FILTER	1	
-14	0756022-1	VALVE-BYPASS	1	
-15	AN932C4	PLUG	1	
-16	MS124663	HELI-COIL	1	
-17	1250405-1	NUT-ADAPTER	1	
-18	AN123883	PACKING-ADAPTER NUT	1	
	SE709	WRENCH ADAPTER-OIL FILTER	1	

Vacuum System (Cont)

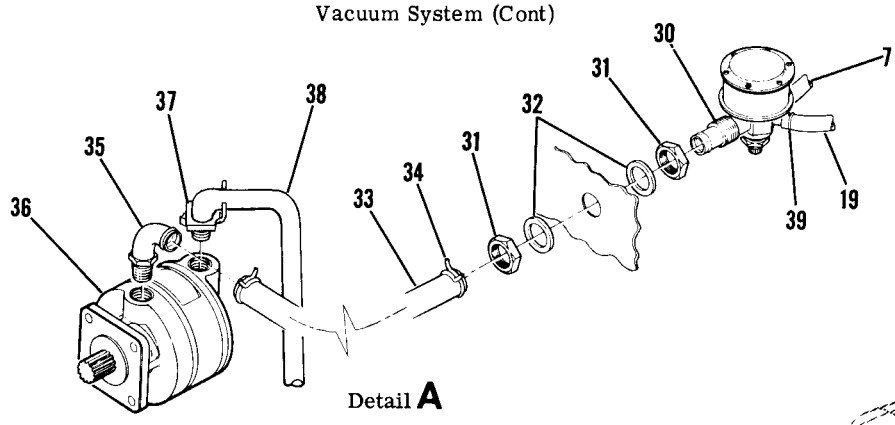

Detail A

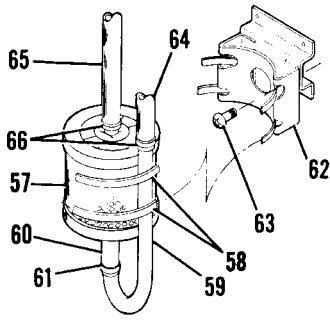

Detail B

18263476 & ON

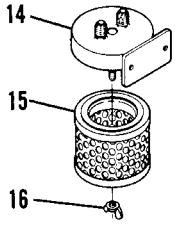

Detail B

18262466 THRU 18263475

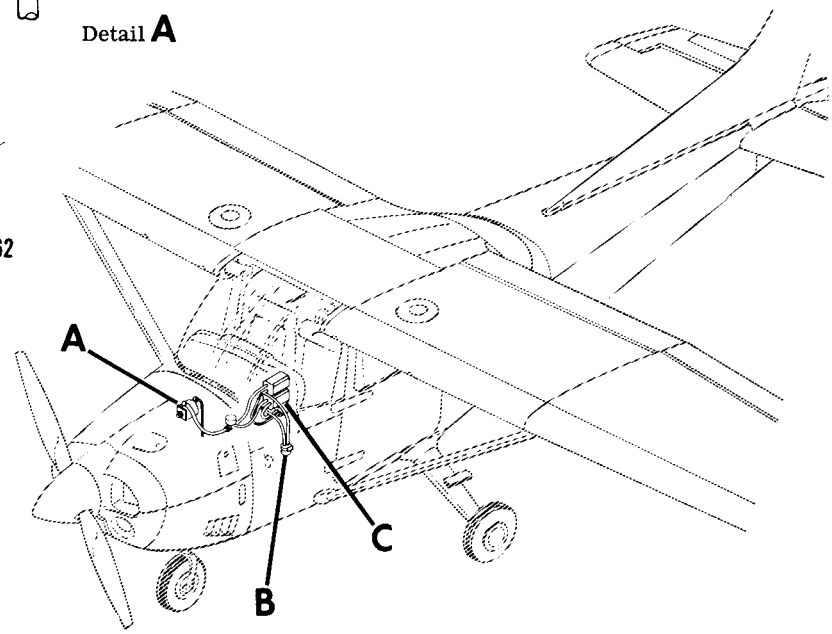

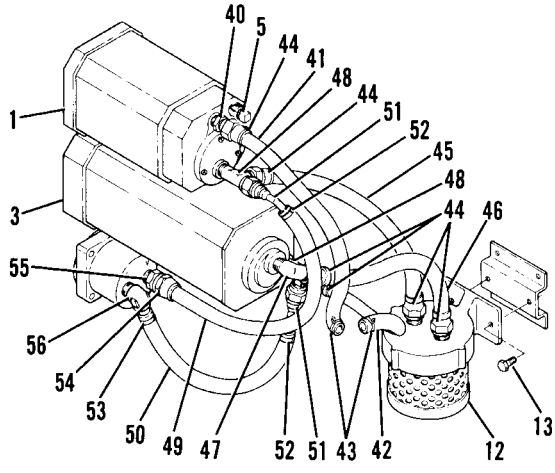

NAV-O-MATIC 300

Detail C

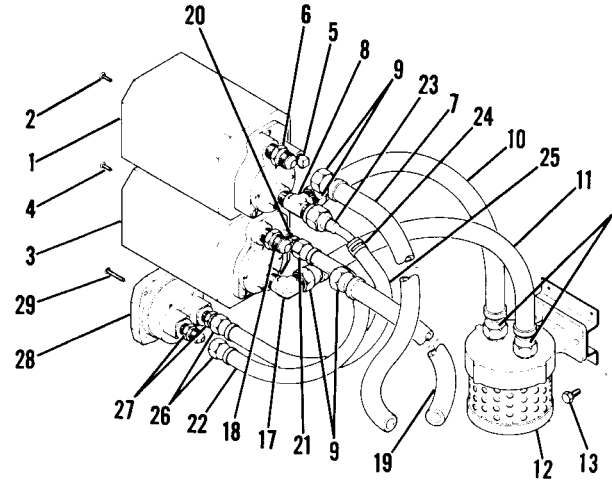

TYPICAL INSTALLATION

Detail C

Figure 91. Vacuum System Installation

FIGURE AND INDEX NO.	PART NUMBER	DESCRIPTION 1 2 3 4 5 6 7	UNITS PER ASSY	USABLE ON CODE
91 -		VACUUM SYSTEM INSTALLATION	NP	A
- 1	C661076-0102 **	GYRO HORIZON	1	
	C661076-0103 **	GYRO-HORIZON ALTERNATE	1	
	C661076-0105 **	GYRO-HORIZON ALTERNATE	1	
	C661076-0101 **	GYRO-HORIZON ALTERNATE	1	
		ATTACHING PARTS		
- 2	AN515-6R6	SCREW	4	
		---*---		
- 3	C661075-0101 %	GYRO-DIRECTIONAL ALTERNATE	1	
	C661075-0103 %	GYRO-DIRECTIONAL ALTERNATE	1	
	C661075-0106 %	GYRO-DIRECTIONAL ALTERNATE	1	
	C661075-0105 %	GYRO-DIRECTIONAL WITH HEADING REFERENCE	1	
	30370-0102	GYRO-DIRECTIONAL ARC NAV-O-MATIC 300	1	
	40760-0104	GYRO-DIRECTIONAL ARC NAV-O-MATIC	1	
	40760-0114	GYRO-DIRECTIONAL ARC ALT FOR 40760-0104	1	
		ATTACHING PARTS		
- 4	AN515-6R6	SCREW	4	
	AN515-6R10	SCREW ATTACH 40760-0104 ONLY	3	
	AN515-6R12	SCREW ATTACH 30370-0102 ONLY	3	
		---*---		
- 5	MS20913-1D	PLUG	1	
- 6	AN816-6D	NIPPLE	1	
- 7	S1495-6	HOSE-12.00 IN LG BKI REF S1499-6L-12.00	1	
		FROM HORIZON GYRO TO RELIEF VALVE		
- 8	MS20826-6D	TEE	1	
- 9	S1497-6	FITTING-SOCKETLESS	6	
-10	S1495-6	HOSE-14.75 IN LG BKI REF S1499-6LL-14.75	1	B
		FROM HORIZON GYRO TO FILTER		
-11	S1495-6	HOSE-14.75 IN LG BKI REF S1499-6LL-14.75	1	B
		FROM DIRECTIONAL GYRO TO FILTER		
-12	C294501-0101	FILTER ASSEMBLY	1	B
		ATTACHING PARTS		
-13	AN3-3A	BOLT	2	B
		---*---		
-14	C294501-0102	BRACKET	1	B
-15	C294501-0103	FILTER ELEMENT	1	B
		ATTACHING PARTS		
-16	P2274	NUT-WING	1	B
		---*---		
-17	MS20822-6D	ELBOW	1	
-18	AN816-6D	ELBOW NOT USED ON NAV 300	1	
	MS20826-6D	TEE NAV 300 ONLY	1	
	1713039-1	ELBOW ASSEMBLY NAV 300 ONLY	1	
	NAS397-8	CLAMP NAV 300 ONLY	1	
-19	S1495-6	HOSE-12.00 IN LG BKI REF S1499-6L-12.00	1	
		FROM DIRECTIONAL GYRO TO RELIEF VALVE		
-20	AN816-4D	NIPPLE NOT USED ON NAV 300	1	
-21	S1497-4	FITTING-SOCKETLESS NOT USED ON NAV 300	1	
-22	S1495-4	HOSE-13.50 IN LG BKI REF S1499-4JJ-13.50	1	
		FROM DIRECTIONAL GYRO TO SUCTION GAGE		
	S1495-4	HOSE-9.00 IN LG BKI REF S1691-1-9.00 NAV 300 ONLY	1	
		FROM DIRECTIONAL GYRO TO SUCTION GAGE		
-23	1713039-1	ELBOW ASSEMBLY	1	
-24	NAS397-8	CLAMP	1	
-25	S1495-4	HOSE-14.75 IN LG BKI REF S1691-1-14.75	1	
		FROM HORIZON GYRO TO SUCTION GAGE		
-26	S1497-4	FITTING-SOCKETLESS	2	
-27	AN816-4D	NIPPLE	2	
-28	C668540-0101	GAGE-SUCTION	1	
		ATTACHING PARTS		
-29	AN515B6R12	SCREW	4	
		---*---		
-30	C482001-0401	VALVE-VACUUM RELIEF	1	
		ATTACHING PARTS		
-31	AN924-10D	NUT	2	
-32	AN960PD1416L	WASHER	2	
		---*---	1	
	C482001-0202	FILTER		

CONTINUED ON NEXT PAGE

FIGURE AND INDEX NO.	PART NUMBER	DESCRIPTION 1 2 3 4 5 6 7	UNITS PER ASSY	USABLE ON CODE
91 -33	S51-10	HOSE-48.00 IN LG BKI REF S51-10-48.00	1	
		ATTACHING PARTS		
-34	S1494-16	CLAMP	2	
		---*---		
-35	1K1-5-10	ELBOW AIRB	1	
-36	C431003-0102	PUMP-VACUUM	1	
	C431003-0301	PUMP-VACUUM ALTERNATE	1	
	AN912-4D	BUSHING USED WITH C431003-0301	2	
-37	1250319-1	LOCATOR	1	
-38	1K66-1	TUBE ASSY	1	
-39	S1494-9	CLAMP	2	
-40	AN816-6D	NIPPLE	1	
-41	S1495-6	HOSE-10.50 IN LG BKI REF S1499-6L-10.50	1	
		FROM HORIZON GYRO TO RELIEF VALVE		
-42	S1495-6	HOSE-7.25 IN LG BKI REF S1499-6L-7.25	1	
		FROM DIRECTIONAL GYRO TO RELIEF VALVE		
-43	S1494-6	CLAMP	2	
-44	S1497-6	FITTING-SOCKETLESS	6	
-45	S1495-6	HOSE-12.00 IN LG BKI REF S1499-6LL-12.00	1	B
		FROM HORIZON GYRO TO FILTER		
	S1495-6	HOSE-13.00 IN LG BKI REF S1499-6L-13.00	1	C
		FROM HORIZON GRYO TO FILTER		
-46	S1495-6	HOSE-12.00 IN LG BKI REF S1499-6LL-12.00	1	B
		FROM DIRECTIONAL GYRO TO FILTER		
	S1495-6	HOSE-13.00 IN LG BKI REF S1499-6L-13.00	1	C
		FROM DIRECTIONAL GYRO TO FILTER		
-47	MS20823-6D	ELBOW	1	
-48	MS20826-6D	TEE	2	
-49	S1495-4	HOSE-17.50 IN LG BKI REF S1691-1-17.50	1	
		HORIZON GYRO TO SUCTION GAGE		
-50	S1495-4	HOSE-10.00 IN LG BKI REF S1691-2-10.00	1	
		DIRECTIONAL GYRO TO SUCTION GAGE		
-51	1713039-1	ELBOW ASSEMBLY	2	
-52	NAS397-8	CLAMP	2	
-53	S1963-2	STA-STRAP ALSO ALTERNATE FOR NAS397-8	1	
-54	S1497-4	FITTING-SOCKETLESS	1	
-55	AN816-4D	NIPPLE	1	
-56	AN844-4D	ELBOW	1	
-57	C294502-0101	FILTER	1	C
		ATTACHING PARTS		
-58	S1693-3	STA STRAP	2	C
		---*---		
-59	0713533-1	U TUBE	1	C
-60	S1495-6	TUBE-2.00 IN LG BKI REF S1495-6-2.00	1	C
		ATTACHING PARTS		
-61	S1693-2	STA STRAP	2	C
		---*---		
-62	0513448-1	BRACKET	1	C
		ATTACHING PARTS		
-63	AN520-10R6	SCREW	2	C
		---*---		
-64	S1495-6	HOSE-12.50 IN LG BKI REF S1499-6L-12.50	1	C
		FROM DIRECTIONAL GYRO TO U TUBE		
-65	S1495-6	HOSE-13.00 IN LG BKI S1499-6L-13.00	1	C
		FROM HORIZON GRYO TO TOP OF FILTER		
-66	S2209-2	STA STRAP	2	C

NOTE. **THESE GYROS ARE PHYSICALLY & FUNCTIONALLY INTERCHANGEABLE.

NOTE. %THESE GYROS ARE PHYSICALLY & FUNCTIONALLY INTERCHANGEABLE.

A---182 SERIAL 18262466 & ON
B---182 SERIAL 18262466 THRU 18263475
C---182 SERIAL 18263476 & ON

FIGURE AND INDEX NO.	PART NUMBER	DESCRIPTION 1 2 3 4 5 6 7	UNITS PER ASSY	USABLE ON CODE
92 -		OXYGEN SYSTEM INSTALLATION	NP	A
- 1	C166010-0101	GAGE ASSY-OXYGEN PRESSURE	1	
	C166010-0103	BEZEL	1	
	C166010-0102	GAGE	1	
- 2	AN910-1	COUPLING	1	
- 3	S2037-1	NIPPLE	1	
- 4	SEE FIG 91A	COVER-SPEAKER OVERHEAD CONSOLE WITH OXYGEN	1	
- 5	AN507-832R12	SCREW	5	
- 6	1211077-5	SUPPORT ASSY-SPEAKER	1	
- 7	NAS697A08	NUTPLATE	6	
- 8	1211076-2	BRACKET ASSY-SPEAKER COVER SUPPORT	1	
		ATTACHING PARTS		
- 9	AN515-8-8	SCREW	2	
		---*---		
-10	1211089-2	BRACKET	2	
-11	NAS696A08	NUTPLATE	2	
	NAS697A08	NUTPLATE	3	
-12	1211054-2	BRACKET-OXYGEN OUTLET	1	
-13	1211048-1	SUPPORT-OXYGEN GAGE	1	
-14	1211090-1	LEVER-OXYGEN CONTROL	1	
		ATTACHING PARTS		
-15	AN3-13A	BOLT	1	
-16	NAS43DD3-13	SPACER INBD	1	
-17	NAS43DD3-45	SPACER OUTBD	1	
-18	AN960-10	WASHER	1	
-19	MS21044N3	NUT	1	
		---*---		
-20	S1953-3	KNOB-OXYGEN CONTROL	1	
-21	S1953-1	KNOB ASSY-OXYGEN CONTROL	1	
		ATTACHING PARTS		
-22	AN507DD440R8	SCREW	1	
		---*---		
-23	0450311-5	CLAMP	1	
-24	NAS43DD3-6	SPACER	1	
-25	AN960-10	WASHER	2	
-26	MS21044N3	NUT	1	
-27	AN742D3	CLAMP	1	
		ATTACHING PARTS		
-28	AN3-5A	BOLT	1	
	NAS43DD3-9	SPACER	1	
	AN960-10	WASHER	1	
-29	MS21044N3	NUT	1	
		---*---		
-30	C166006-0109	VALVE OUTLET ASSY-OXYGEN	4	
-31	Z651-13	NUT ZEPA	1	
-32	C166006-0108	REPAIR KIT-OXYGEN OUTLET	1	
-33	Z651-3	ADAPTER ZEPA	1	
-34	Z651-1	COVER ASSY-OXYGEN VALVE ZEPA	1	
-35	10-4677C	RETAINER ZEPA	1	
-36	1200415-7	ESCUTCHEON	1	
-37	S1721-12	LINE ASSY	1	
-38	S1724-1	TEE	1	
-39	S1723-5	LINE ASSY	1	
	C166008-0101	VALVE ASSY-FILLER REMOTE OXYGEN	1	
		ATTACHING PARTS		
-40	AN525-832R8	SCREW	3	
-41	AN960D8	WASHER	3	
-42	NAS679A08	NUT	3	
		---*---		
-43	S1520-1	CAP & CHAIN ASSY	1	
-44	C166008-0103	O RING REPAIR KIT	1	
-45		DELETED NOT PROCURABLE		

CONTINUED ON NEXT PAGE

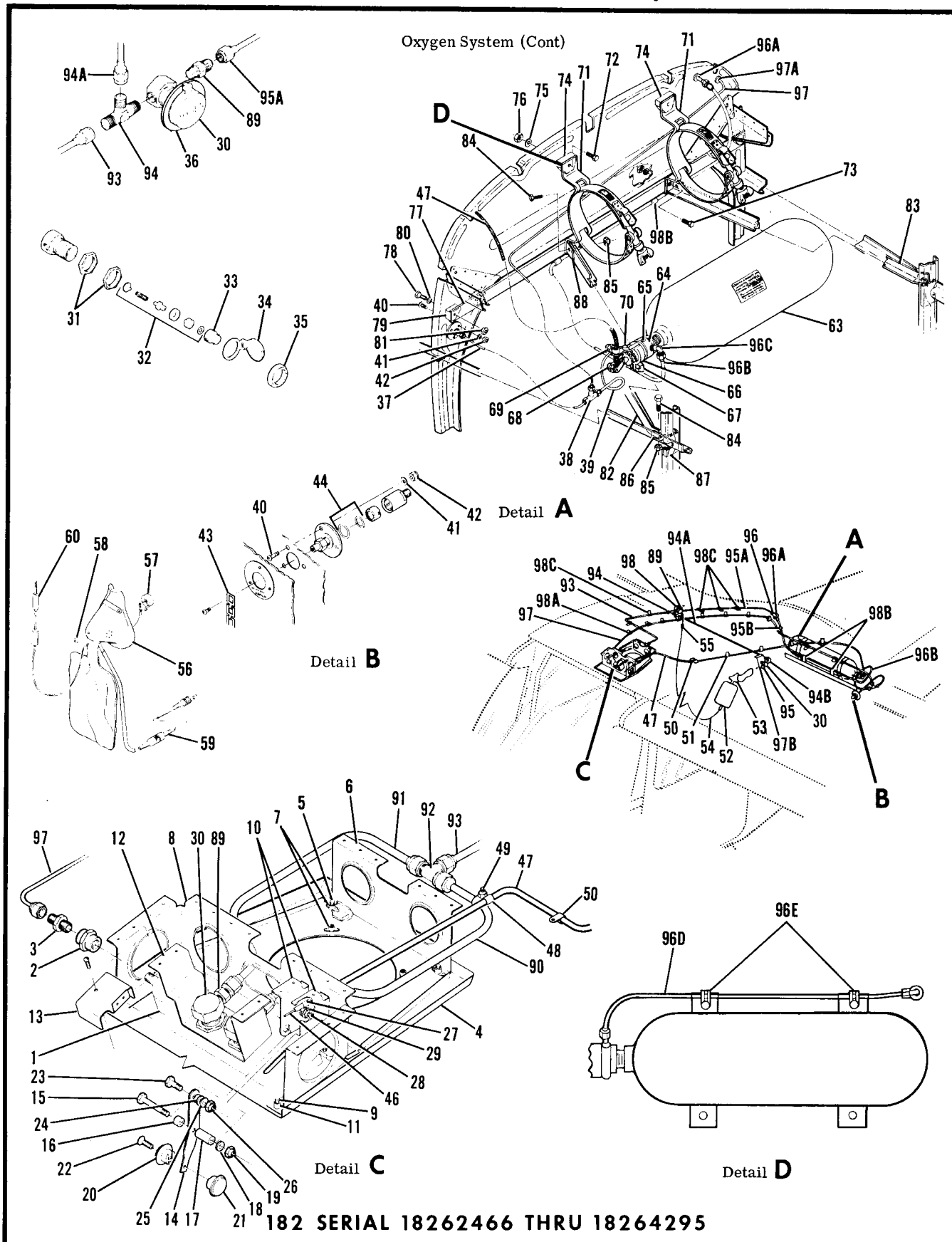

182 SERIAL 18262466 THRU 18264295

Figure 92. Oxygen System Installation

FIGURE AND INDEX NO.	PART NUMBER	DESCRIPTION 1 2 3 4 5 6 7	UNITS PER ASSY	USABLE ON CODE
92 -46	S1398-1	WIRE-CONTROL 102.00 IN LG BKI REF S1398-1-102.00 -	1	
-47	S1398-2	CASING-CONTROL 99.00 IN LG BKI REF S1398-2-99.00 -	1	
		ATTACHING PARTS		
-48	S1155-3	CLAMP	2	
-49	AN520-10R8	SCREW	1	
	AN345-10	NUT	1	
-50	S1155-3	CLAMP	2	
	S1021Z10-6	SCREW	2	
-51	S1153-3	CLAMP	4	
	S1021Z8-8	SCREW	4	
		---*---		
	0800030-19	CASE ASSY-OXYGEN MASK NOT ILLUSTRATED	4	
-52	C166005-0204	MASK & LINE ASSY-PASSENGER	3	
-53	C166005-0205	MASK ASSY	1	
	C166005-0504	LINE & FITTING ASSY-PASSENGER 8,000-14,000 FT	1	
-54	ZH716	HOSE ASSY ZEPA	1	
-55	ZH727-8	LINE & FITTING ASSY-8,000-14,000 FT ZEPA	1	
	C166005-0707	MASK & LINE ASSY-PILOT WITH MICROPHONE	1	
-56	C166009-0703	MASK ASSY	1	
-57	64881-00	MICROPHONE	1	
-58	Z736	NUT	1	
	C166005-0705	LINE & FITTING ASSY 14,000-22,000 FT	1	
-59	ZH716	HOSE ASSY ZEPA	1	
-60	0770750-254	CABLE ASSY-OXYGEN MASK MICROPHONE	1	
-61		DELETED NOT PROCURABLE		
-62		DELETED NOT PROCURABLE		
-63	C166001-0601	CYLINDER & REGULATOR ASSY-OXYGEN	1	
-64	C166002-0401	REGULATOR ASSY-OXYGEN	1	
-65	12-4862	PLUG	1	
	AN932-S2	PLUG	2	
-66	91-8000AC	BRACKET ASSY ZEPA	1	
		ATTACHING PARTS		
-67	97NTE-048	NUT ZEPA	1	
	16-2000C	BOLT ZEPA	1	
		---*---		
-68	10-8001C	NUT ZEPA	1	
	16-8375C	SET SCREW ZEPA	1	
-69	10-8001C	NUT ZEPA	1	
	16-8500C	SET SCREW ZEPA	1	
-70	ZF604	ADAPTER ZEPA	1	
-71	C166007-0102	BRACKET ASSY-CYLINDER MOUNTING	2	
		ATTACHING PARTS		
-72	AN3-12A	BOLT UPPER ONLY	1	B
	AN3-13A	BOLT UPPER ONLY	1	C
-73	AN3-4A	BOLT LOWER ONLY	1	
-74	0700696-2	SPACER UPPER ONLY	1	
-75	AN970-3	WASHER UPPER & LOWER	2	
-76	MS21044N3	NUT UPPER & LOWER	2	
		---*---		
-77	0712508-1	CHANNEL-OXYGEN CYLINDER SUPPORT	1	
		ATTACHING PARTS		
-78	AN3-12A	BOLT	4	
-79	0700696-1	SPACER	4	
-80	AN970-3	WASHER	4	
-81	MS21044N3	NUT	4	
		---*---		
-82	0712755-1	SUPPORT-OXYGEN BOTTLE LH	1	
-83	0712755-2	SUPPORT-OXYGEN BOTTLE RH	1	
		ATTACHING PARTS		
-84	AN3-4A	BOLT	2	
-85	MS21044N3	NUT	2	
		---*---		
-86	0712754-1	BRACKET-OXYGEN BOTTLE SUPPORT LH	1	
	0712754-2	BRACKET-OXYGEN BOTTLE SUPPORT RH	1	
-87	0712753-1	BRACKET-BULKHEAD LH	1	
	0712753-2	BRACKET-BULKHEAD RH	1	
-88	0712756-1	CLIP-OXYGEN BOTTLE SUPPORT LH	1	
	0712756-2	CLIP-OXYGEN BOTTLE SUPPORT RH	1	

CONTINUED ON NEXT PAGE

FIGURE AND INDEX NO.	PART NUMBER	DESCRIPTION 1 2 3 4 5 6 7	UNITS PER ASSY	USABLE ON CODE
92 -89	AN816-4D	NIPPLE	3	
-90	1200417-51	LINE ASSY	1	
-91	1200417-52	LINE ASSY	1	
-92	AN824-4D	TEE	1	
-93	1200417-69	LINE ASSY	1	
-94	MS20826-4D	TEE	1	
-94A	1200417-17	LINE ASSY	1	B
	1200417-95	LINE ASSY	1	C
		ATTACHING PARTS		
	S1155-4	CLAMP	2	C
	S1021Z10-6	SCREW	2	C
		---*---		
-94B	MS20822-4D	ELBOW	1	B
	AN816-4D	NIPPLE	1	C
-95	MS20913-10	PLUG	1	
-95A	1200417-85	LINE ASSY	1	
-95B	AN821-4D	ELBOW	1	
-96	S292-14	SLEEVING	1	
-96A	MS35489-13S	GROMMET	1	
-96B	1200417-84	LINE ASSY	1	B
-96C	MS20822-4D	ELBOW	1	
-96D	1200417-94	LINE ASSY	1	C
-96E	MS21919DG4	CLAMP	2	C
-97	S1722	LINE ASSY 140.00 IN LG BKI REF S1722-144.00 IN LG-	1	
-97A	MS35489-2S	GROMMET	1	
-97B	0700730-1	BRACKET-OXYGEN OUTLET LH	1	
-98	0700730-2	BRACKET-OXYGEN OUTLET RH	1	
-98A	S1155-2	CLAMP	8	
		ATTACHING PARTS		
	S1021Z6-6	SCREW	1	
		---*---		
-98B	S1486DG4	CLAMP	2	
		ATTACHING PARTS		
	S1021Z8-6	SCREW	1	
		---*---		
-98C	S1155-4	CLAMP	4	
		ATTACHING PARTS		
	S1021Z8-8	SCREW	1	
		---*---		
-98D	0770750-254	CABLE ASSY-OXYGEN MASK MICROPHONE		

A---182 SERIAL 18262466 THRU 18264295
B---182 SERIAL 18262466 THRU 18263475
C---182 SERIAL 18263476 THRU 18264295

FIGURE AND INDEX NO.	PART NUMBER	DESCRIPTION 1 2 3 4 5 6 7	UNITS PER ASSY	USABLE ON CODE
92A-		OXYGEN SYSTEM INSTALLATION	NP	A
- 1	C166010-0101	GAGE ASSY-OXYGEN PRESSURE	1	
	C166010-0103	BEZEL	1	
	C166010-0102	GAGE	1	
- 2	AN910-1	COUPLING	1	
- 3	S2037-1	NIPPLE	1	
- 4	SEE FIG 95	COVER-SPEAKER OVERHEAD CONSOLE WITH OXYGEN	1	
		ATTACHING PARTS		
- 5	AN507-832R12	SCREW	5	
		---*---		
- 6	1211077-5	SUPPORT ASSY-SPEAKER	1	
- 7	NAS697A08	NUTPLATE	6	
- 8	1211076-2	BRACKET ASSY-SPEAKER COVER SUPPORT	1	
		ATTACHING PARTS		
- 9	AN515-8-8	SCREW	2	
		---*---		
-10	1211089-2	BRACKET	2	
-11	NAS696A08	NUTPLATE	2	
	NAS697A08	NUTPLATE	3	
-12	1211054-2	BRACKET-OXYGEN OUTLET	1	
-13	1211048-1	SUPPORT-OXYGEN GAGE	1	
-14	1211090-1	LEVER-OXYGEN CONTROL	1	
		ATTACHING PARTS		
-15	AN3-13A	BOLT	1	
-16	NAS43DD3-13	SPACER INBD	1	
-17	NAS43DD3-45	SPACER OUTBD	1	
-18	AN960-10	WASHER	1	
-19	MS21044N3	NUT	1	
		---*---		
-20	S1953-3	KNOB-OXYGEN CONTROL	1	
-21	S1953-1	KNOB ASSY-OXYGEN CONTROL	1	
		ATTACHING PARTS		
-22	AN507DD40R8	SCREW	1	
		---*---		
-23	0450311-5	CLAMP	1	
-24	NAS43DD3-6	SPACER	1	
-25	AN960-10	WASHER	2	
-26	MS21044N3	NUT	1	
-27	C166006-0109	VALVE OUTLET ASSY-OXYGEN	4	
-28	Z651-3	NUT ZEPA	1	
-29	C166006-0108	REPAIR KIT-OXYGEN OUTLET	1	
-30	Z651-3	ADAPTOR ZEPA	1	
-31	Z651-1	COVER ASSY-OXYGEN VALVE ZEPA	1	
-32	10-4677C	RETAINER	1	
-33	C166008-0101	VALVE ASSY-FILLER REMOTE OXYGEN	1	
		ATTACHING PARTS		
-34	AN525-832R8	SCREW	3	
-35	AN960D8	WASHER	3	
-36	MS21044A08	NUT	3	
		---*---		
-37	S1520-1	CAP & CHAIN ASSY	1	
-38	C166008-0103	O RING REPAIR KIT	1	
-39		DELETED NOT PROCURABLE		
-40	S1721-12	LINE ASSY	1	
-41	S1724-1	TEE	1	
-42	S1723-5	LINE ASSY	1	

CONTINUED ON NEXT PAGE

Oxygen System (Cont)

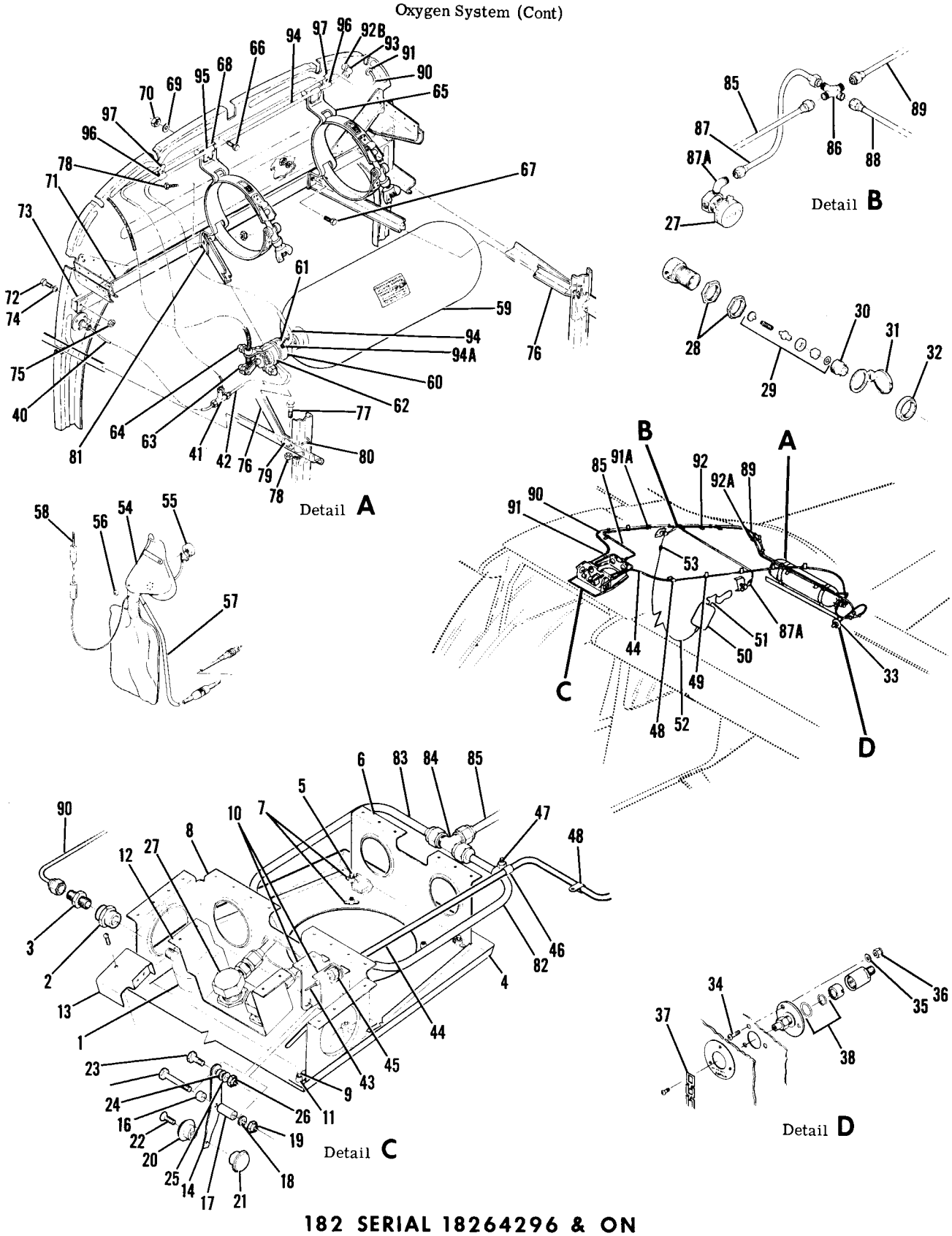

182 SERIAL 18264296 & ON

Figure 92A. Oxygen System Installation

FIGURE AND INDEX NO.	PART NUMBER	DESCRIPTION 1 2 3 4 5 6 7	UNITS PER ASSY	USABLE ON CODE
92A-43	S1398-1	WIRE-CONTROL 102.00 IN LG BKI REF S1398-1-102.00 -	1	
-44	S1398-2	CASING-CONTROL WIRE 99.0 IN LG BKI REF S1398-2-1-99.0 -	1	
		ATTACHING PARTS		
-45	S1283-1	NUT	2	
	AN960-10	WASHER	2	
-46	S1155-3	CLAMP	1	
	S1155-4	CLAMP	1	
-47	S1021Z10-8	SCREW	1	
	AN446-4	NUT	1	
-48	S1155-3	CLAMP	1	
	S1021Z10-6	SCREW	1	
-49	S1155-3	CLAMP	4	
	S1021Z8-8	SCREW	4	
		---*---		
	0800030-19	CASE ASSY-OXYGEN MASK NOT ILLUSTRATED	4	
-50	C166005-0204	MASK & LINE ASSY-PASSENGER	3	
-51	C166005-0205	MASK ASSY	1	
	C166005-0504	LINE & FITTING ASSY-PASSENGER 8,000-14,000 FT	1	
-52	ZH716	HOSE ASSY ZEPA	1	
-53	ZH727-8	LINE & FITTING ASSY-8,000-14,000 FT ZEPA	1	
	C166005-0707	MASK & LINE ASSY-PILOT WITH MICROPHONE	1	
-54	C166005-0703	MASK ASSY	1	
-55	64881-00	MICROPHONE	1	
-56	Z736	NUT	1	
-57	C166005-0705	LINE & FITTING ASSY 14,000-20,000 FT	1	
-58	0770750-254	CABLE ASSY-OXYGEN MASK MICHROPHONE	1	
-59	C166001-0601	CYLINDER & REGULATOR ASSY-OXYGEN	1	
-60	C166002-0401	REGULATOR ASSY-OXYGEN	1	
-61	12-4862	PLUG	2	
	AN932-S2	PLUG	1	
-62	91-8000AC	BRACKET ASSY ZEPA		
		ATTACHING PARTS		
	97NNTE-048	NUT ZEPA	1	
	16-2000C	BOLT ZEPA	1	
		---*---		
-63	10-8001C	NUT ZEPA	1	
	16-8375C	SET SCREW ZEPA	1	
-64	10-8001C	NUT ZEPA	1	
	16-8500C	SET SCREW ZEPA	1	
	ZF604	ADAPTER ZEPA	1	
-65	C166007-0102	BRACKET ASSY-CYLINDER MOUNTING	2	
		ATTACHING PARTS		
-66	AN3-13A	BOLT UPPER ONLY	2	
-67	AN3-4A	BOLT LOWER ONLY	2	
-68	0700696-2	SPACER UPPER ONLY	2	
-69	AN970-3	WASHER 2 UPPER & 2 LOWER	4	
-70	MS21044N3	NUT 2 UPPER & 2 LOWER	4	
		---*---		
-71	0712508-1	CHANNEL-OXYGEN CYLINDER SUPPORT	1	
		ATTACHING PARTS		
-72	AN3-12A	BOLT	4	
-73	0700696-1	SPACER	4	
-74	AN970-3	WASHER	4	
-75	MS21044N3	NUT	4	
		---*---		
-76	0712755-1	SUPPORT-OXYGEN BOTTLE LH	1	
	0712755-2	SUPPORT-OXYGEN BOTTLE RH	1	
		ATTACHING PARTS		
-77	AN3-4A	BOLT	2	
-78	MS21044N3	NUT	2	
		---*---		
-79	0712754-1	BRACKET-OXYGEN BOTTLE SUPPORT LH	1	
	0712754-2	BRACKET-OXYGEN BOTTLE SUPPORT RH	1	

CONTINUED ON NEXT PAGE

FIGURE AND INDEX NO.	PART NUMBER	DESCRIPTION 1 2 3 4 5 6 7	UNITS PER ASSY	USABLE ON CODE
92A-80	0712753-1	BRACKET-BULKHEAD LH	1	
	0712753-2	BRACKET-BULKHEAD RH	1	
-81	0712756-1	CLIP-OXYGEN BOTTLE SUPPORT LH	1	
	0712756-2	CLIP-OXYGEN BOTTLE SUPPORT RH	1	
-82	1200107-51	LINE ASSY	1	
-83	1200107-52	LINE ASSY	1	
-84	AN824-4D	TEE	1	
-85	1200417-102	LINE ASSY	1	
-86	AN827-4D	CROSS FITTING	1	
-87	1200417-100	LINE ASSY	1	
-87A	MS20823-4D	ELBOW	2	
-88	1200417-101	LINE ASSY	1	
-89	1200417-99	LINE ASSY	1	
-90	S1722-125	LINE ASSY	1	
-91	S1155-2	CLAMP	1	
	S1155-4	CLAMP	1	
	S1021Z10-8	SCREW	1	
	NAS446-4	NUT	1	
-91A	S2209-1	TIE-NYLON	AR	
-92	S1155-4	CLAMP	4	
	S1022Z8-10	SCREW	3	
	S1022Z8-8	SCREW	1	
	NAS446-4	NUT	3	
	AN743-12	BRACKET	3	
-92A	MS35489-14S	GROMMET	1	
-92B	MS35489-13S	GROMMET	1	
-92C	MS35489-2S	GROMMET	1	
-93	AN821-4D	ELBOW	1	
-94	1200417-94	LINE ASSY	1	
-94A	AN816-4D	NIPPLE	1	
-95	MS21919DG4	CLAMP	2	
-96	S1155-4	CLAMP	2	
-97	S1155-2	CLAMP	2	
		ATTACHING PARTS		
	S1021Z10-8	SCREW	2	
	NAS446-4	NUT	2	
		---*---		
		A---182 SERIAL 18264296 & ON		

FIGURE AND INDEX NO.	PART NUMBER	DESCRIPTION 1 2 3 4 5 6 7	UNITS PER ASSY	USABLE ON CODE
93 -		ELECTRICAL EQUIPMENT INSTALLATION	NP	A
- 1	0711779-1 ¤	ESCUTCHEON-DOME LIGHT	1	
		ATTACHING PARTS		
	S1021A8-6	SCREW	1	
	AN525-8R7	SCREW	2	
		---*---		
	S1831-1	SWITCH-DOME LIGHT	1	
		ATTACHING PARTS		
	AN515-4R4	SCREW	2	
		---*---		
	S1893-1	BASE-DOME LIGHT	1	
	S1876-1	LAMP-DOME LIGHT	1	
	1706015-2	LENS-DOME LIGHT	1	
- 2	S1831-1	SWITCH-UTILITY	1	
		ATTACHING PARTS		
- 3	AN5154R4	SCREW	2	
- 4		DELETED NEVER USED		
		---*---		
- 5	SEE FIG 96	INSTRUMENT PANEL LIGHTS INSTALLATION	1	
- 6	SEE FIG 63	LANDING LIGHTS INSTALLATION	1	
- 7	S2077-5	HORN ASSY-STALL WARNING	1	
		ATTACHING PARTS		
	AN5078632R12	SCREW	4	
		---*---		
- 8	0713511-1	FLASHER-NAVIGATION LIGHTS	1	
		ATTACHING PARTS		
	S1021Z6-6	SCREW	4	
	NAS446-2-3	NUT	4	
		---*---		
- 9	S1991-1	CONTACTOR-STARTER	1	
		ATTACHING PARTS		
	AN4-4A	BOLT	2	
	AN960-416L	WASHER	2	
		---*---		
-10	C611001-0101	REGULATOR-VOLTAGE WEU C611001-0102	1	
	C611001-0102	REGULATOR-VOLTAGE	1	
		ATTACHING PARTS		
	AN520-416R8	SCREW	2	
		---*---		
	1250211-4	PLUG ASSY-VOLTAGE REGULATOR	1	
-11	0752611-1	DOOR ASSY-POWER RECEPTACLE	1	
-12	S1115-30	STUD	2	
	S1115-9	RING	2	
-13	0752610-1	DOUBLER ASSY	1	
-14	S1115-19	RECEPTACLE-STUD	2	
-15	AN2552-3A	RECEPTACLE-EXTERNAL POWER	1	
		ATTACHING PARTS		
-16	AN509-10R14	SCREW	2	
-17	MS21044N3	NUT	2	
-18	0312155-10	GROUND STRAP	1	
		---*---		
-19	0701036-2	BRACKET-RECEPTACLE SUPPORT	1	
		ATTACHING PARTS		
-20	NAS1738 3B	RIVET	3	
		---*---		
-21	MS25171-3S	NIPPLE	1	
-22	1570043-3	DIODE BOARD	1	
-23	NAS43DD3-8	SPACER	1	
-24	S1660-1	CONTACTOR-12V	1	
		ATTACHING PARTS		
-25	AN520-416R8	SCREW	2	
		---*---		
-26	S1807-1	COVER-TERMINAL	2	
	S1693-2	STA-STRAP	2	
-27	0770610PC2	CABLE RECEPTACLE TO CONTACTOR	1	
-28	0770610PA13	CABLE CONTACTOR TO STARTER CONTACTOR	1	

CONTINUED ON NEXT PAGE

Electrical Equipment

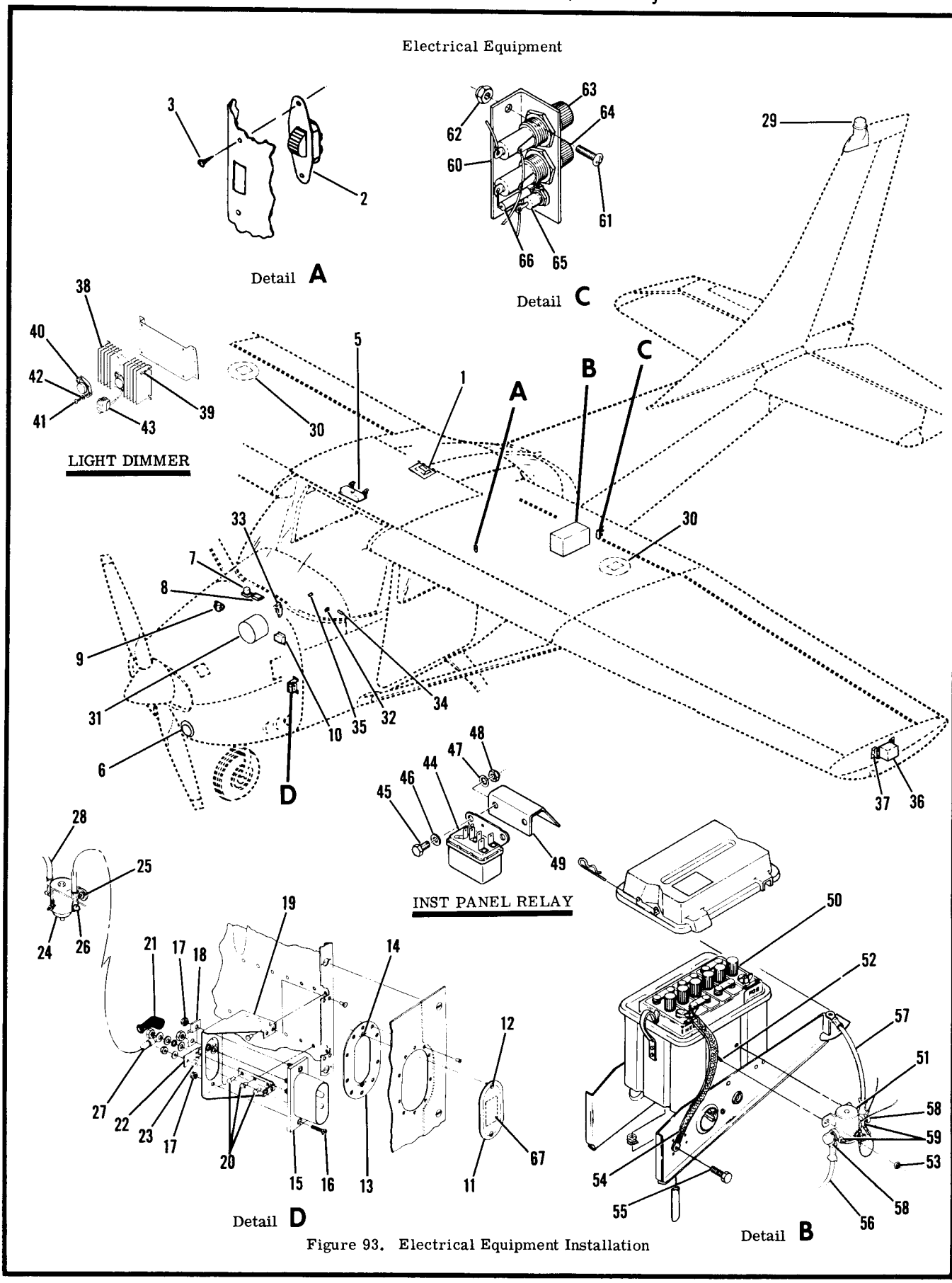

Figure 93. Electrical Equipment Installation

FIGURE AND INDEX NO.	PART NUMBER	DESCRIPTION 1 2 3 4 5 6 7	UNITS PER ASSY	USABLE ON CODE
93 -29	SEE FIG 97	FLASHING BEACON INSTALLATION	1	
-30	SEE FIG 98	COURTSEY LIGHT INSTALLATION	1	
-31	SEE FIG 99	ALTERNATOR INSTALLATION-SHOCK MOUNTED	1	
-32	0770719-2	DIODE-MASTER SWITCH	1	B
	1570043-9	DIODE-MASTER SWITCH	1	C
-33	C613001-0201	POWER SUPPLY-ELECTROLUMINESCENT PANEL	1	
-34	C593001-0101	SENSOR-OVERVOLTAGE	1	
		ATTACHING PARTS		
	CM679-2	TIE STRAP	1	
		---*---		
-35	34002-55	TERMINAL BLOCK TRANSISTORIZED LIGHT	1	
		ATTACHING PARTS		
	AN507-6R8	SCREW	1	
	AN936A6	WASHER	2	
	NAS679A06	NUT	1	
		---*---		
-36	C622007-0101	POWER SUPPLY-STROBE LIGHT	1	
		ATTACHING PARTS		
	AN520-10R7	SCREW	2	
		---*---		
-37	1620075-3	BRACKET ASSY-STROBE LIGHT POWER SUPPLY	1	
	NAS686A3K	NUTPLATE	4	
-38	1570166-1	DIMMING ASSY-TRANSISTORIZED LIGHTING	1	
		ATTACHING PARTS		
-39	AN520-10R6	SCREW	4	
	AN960-10L	WASHER	4	
		---*---		
-40	2N3055	TRANSISTOR RCA	1	
		ATTACHING PARTS		
-41	S1021Z6-8	SCREW	2	
-42	AN960-10L	WASHER	2	
		---*---		
-43	S1641-6	HOUSING-SOCKET	1	
-44	S1917-1	RELAY-SPLIT BUS BAR	1	
		ATTACHING PARTS		
-45	AN4-5A	BOLT	2	
-46	AN960-416L	WASHER	2	
-47	AN936A416	WASHER	2	
-48	MS21042L4	NUT	2	
		---*---		
-49	SEE NOTE *	BRACKET-RELAY MOUNTING	1	
-50	0712605-201	BATTERY ASSY	1	
-51	S1579-2	CONTACTOR-BATTERY	1	
		ATTACHING PARTS		
-52	AN3-3A	BOLT	2	
-53	MS21044N3	NUT	2	
		---*---		
-54	0412007-1	STRAP-BATTERY GROUND	1	
		ATTACHING PARTS		
-55	AN4-4A	BOLT	1	
	AN960-416L	WASHER	1	
		---*---		
-56	0770610PA11	CABLE-BATTERY CONTACTOR TO STARTER CONTACTOR	1	
-57	0770610PA10	CABLE-BATTERY CONTACTOR TO BATTERY	1	
-58	S1807-1	COVER	2	
-59	S1693-2	STA STRAP	2	
-60	0712031-2	BRACKET	1	
		ATTACHING PARTS		
-61	AN515-832-5	SCREW	2	
-62	MS21044N3	NUT	2	
		---*---		
-63	S1090-22	FUSEHOLDER ASSY	1	
	S1091-1	FUSE-1 AMP	1	
-64	S1090-2	FUSE HOLDER ASSY	1	
	S1091-5	FUSE-5 AMP	1	
-65	20H3P	DIODE SATA	1	
-66	X26263	RESISTOR	1	
-67	SEE FIG 2	PLACARD-BATTERY POLARITY	1	

NOTE. *REFER TO INSTRUMENT PANEL FIGURE.

A---182 SERIAL 18262446 & ON
B---182 SERIAL 18262446 THRU 18264295
C---182 SERIAL 18264296 & ON

Electrical Equipment (Cont)

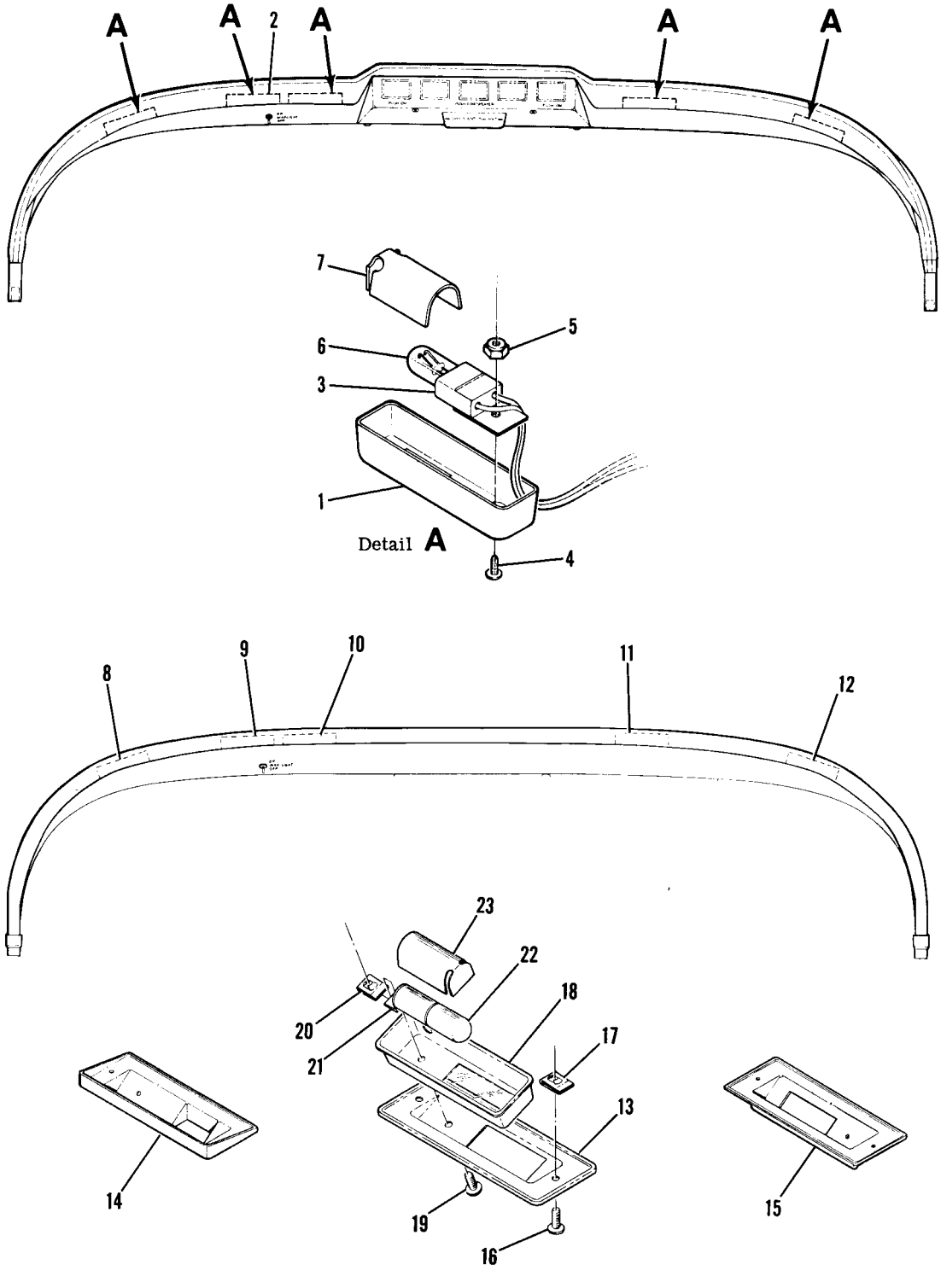

Figure 94. Instrument Panel Lights Installation

FIGURE AND INDEX NO.	PART NUMBER		DESCRIPTION 1 2 3 4 5 6 7	UNITS PER ASSY	USABLE ON CODE
94 -			INSTRUMENT PANEL GLARE SHIELD LIGHTS INSTALLATION	NP	A
- 1	1213319-7		HOUSING ASSY-LIGHT RED LENS	4	B
- 2	1213319-8		HOUSING ASSY-LIGHT BLUE LENS MAPLIGHT SWITCH	1	B
- 3	S1910-2		LIGHT ASSY	5	B
			ATTACHING PARTS		
- 4	AN515-4R6		SCREW	1	
- 5	AN340-4		NUT	1	
			---*---		
- 6	S1901-1		LAMP	5	B
- 7	1213321-2		REFLECTOR	5	B
- 8	0713487-7		LIGHT ASSY-GLARESHIELD	1	C
- 9	0713487-3		LIGHT ASSY-GLARESHIELD APPROACH PLATE	1	C
-10	0713487-15		LIGHT ASSY-GLARESHIELD	1	C
-11	0713487-1		LIGHT ASSY-GLARESHIELD	1	C
-12	0713487-5		LIGHT ASSY-GLARESHIELD	1	C
-13	0713487-11	¤	COVER USED WITH 0713487-7	1	C
-14	0713487-10	¤	COVER USED WITH 0713487-3	1	C
-15	0713487-14	¤	COVER USED WITH 0713487-15	1	C
	0713487-9	¤	COVER USED WITH 0713487-1	1	C
	0713487-12	¤	COVER USED WITH 0713487-5	1	C
			ATTACHING PARTS		
-16	S1021Z6-8		SCREW	2	C
	S1021Z6-10		SCREW USED WITH 0713487-10 ONLY		
-17	NAS488-5-3		NUT	2	C
			---*---		
-18	1213319-15		LIGHT ASSY USED WITH 0713487-3 BLUE LENS	1	C
	1213319-16		LIGHT ASSY USED WITH 0713487-1,-5 & -15 RED LENS	3	C
	1213319-18		LIGHT ASSY USED WITH 0713487-7 RED LENS	1	C
			ATTACHING PARTS		
-19	S1021Z4-68		SCREW	1	C
-20	NAS395-1-3		NUT	1	C
			---*---		
-21	4155-308		LAMPHOLDER	1	C
-22	53		LAMP	1	C
-23	1213321-2		REFLECTOR	1	C

NOTE. ¤THIS PART MUST HAVE A SECOND DASH NUMBER ADDED TO DENOTE COLOR. REFER TO HOW TO ORDER INTERIOR PARTS-PAGE VII.

A---182 SERIAL 18262466 & ON
B---182 SERIAL 18262466 THRU 18264295
C---182 SERIAL 18264296 & ON

Electrical Equipment (Cont)

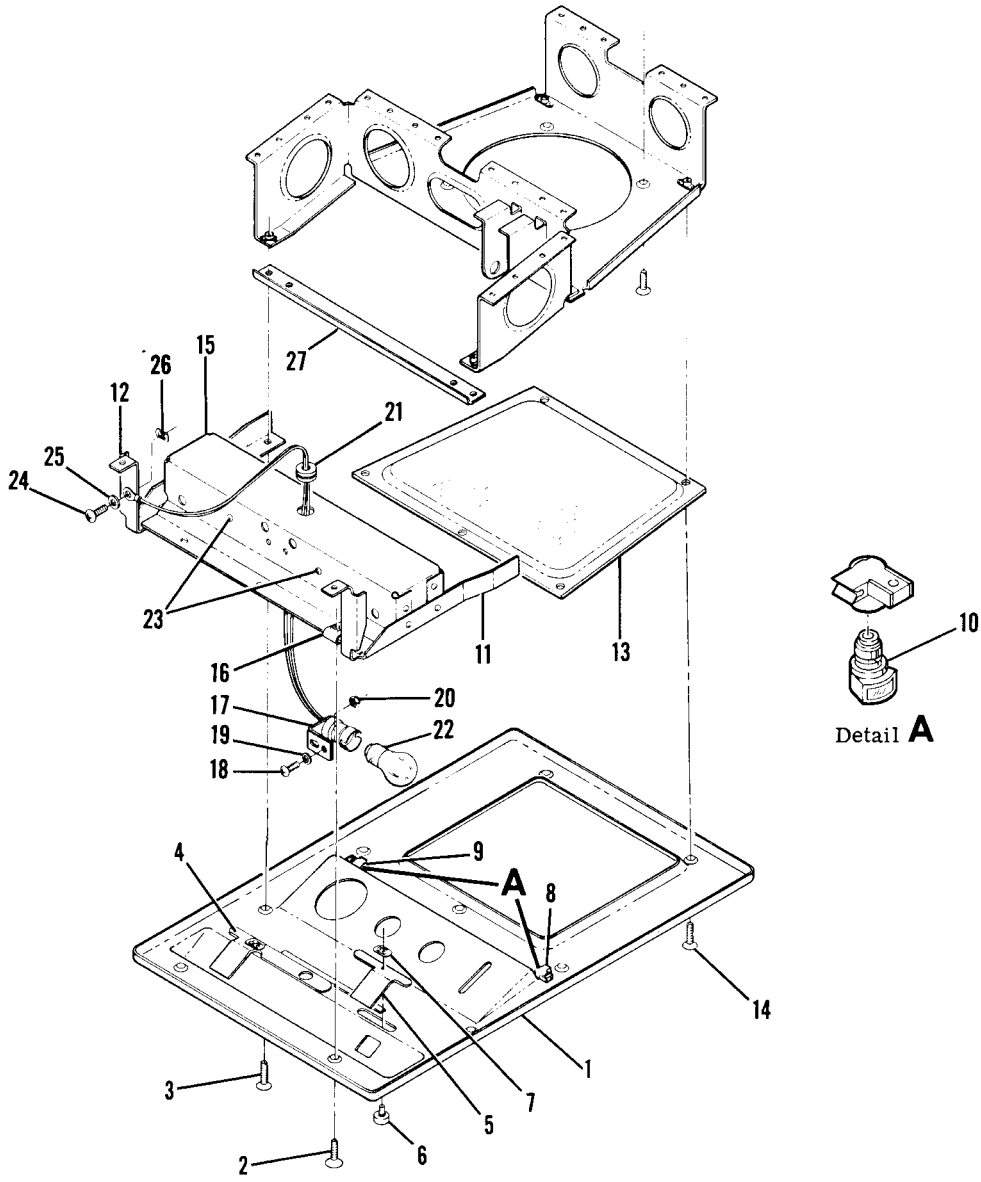

Figure 95. Instrument Panel Light & Console Installation

FIGURE AND INDEX NO.	PART NUMBER		DESCRIPTION 1 2 3 4 5 6 7	UNITS PER ASSY	USABLE ON CODE
95 -			INSTRUMENT PANEL LIGHT & CONSOLE INSTALLATION	NP	
- 1	0711778-5	□	COVER ASSEMBLY WITH OXYGEN CUTOUTS	1	
	0711778-7	□	COVER ASSEMBLY WITHOUT OXYGEN CUTOUTS	1	
			ATTACHING PARTS		
- 2	S1022Z8-10		SCREW	2	
- 3	AN515-8R8		SCREW	2	
			---*---		
- 4	0711784-1		COVER-SLIDE RH	1	
- 5	1213152-3		COVER-SLIDE LH	1	
- 6	0700628-5		SLIDE	2	
			ATTACHING PARTS		
- 7	AN340-4		NUT	2	
			---*---		
- 8	S1899-5	*	LIGHT ASSY-TAB MOUNTED LH	1	
- 9	S1899-6	*	LIGHT ASSY-TAB MOUNTED RH	1	
-10	MS25237-330		BULB	1	
-11	0711781-1		BRACKET-OVERHEAD CONSOLE LH	1	
-12	0711781-2		BRACKET-OVERHEAD CONSOLE RH	1	
-13	1211080-1		SPEAKER GRILL	1	
			ATTACHING PARTS		
-14	AN507-832R12		SCREW	5	
			---*---		
-15	0711777-1		HOUSING ASSY-PANEL LIGHT	1	
			ATTACHING PARTS		
-16	NAS396-4-3		NUT	2	
			---*---		
-17	0513208-3		SOCKET ASSY-LAMP	2	
			ATTACHING PARTS		
-18	NAS1352-06-6		SCREW	1	
-19	AN960-6L		WASHER	1	
-20	NAS679-A06		NUT	1	
			---*---		
-21	MS35489-6		GROMMET	1	
-22	94		LAMP GE	2	
	0711780-3		BRACKET ASSY-PANEL LIGHT	1	
			ATTACHING PARTS		
-23	S1021Z8-6		SCREW	2	
	AN960-8L		WASHER	2	
	NAS446-4		NUT	2	
			---*---		
	AN515-8R24		SCREW-LIGHT ADJUSTMENT	1	
	AN960-8L		WASHER-LIGHT ADJUSTMENT	1	
	NAS679A08		NUT-LIGHT ADJUSTMENT	1	
-24	S1021Z6-6		SCREW-GROUND	1	
-25	AN960-6L		WASHER-GROUND	1	
-26	NAS446-2		NUT-GROUND	1	
-27	0700761-6		ANGLE SUPPORT	1	

NOTE. □THIS PART MUST HAVE A SECOND DASH NUMBER ADDED TO DENOTE COLOR. REFER TO HOW TO ORDER INTERIOR PARTS-PAGE VII.

NOTE. *THESE PARTS ARE REQUIRED ON 0711778-5 COVER ASSEMBLY ONLY.

Electrical Equipment (Cont)

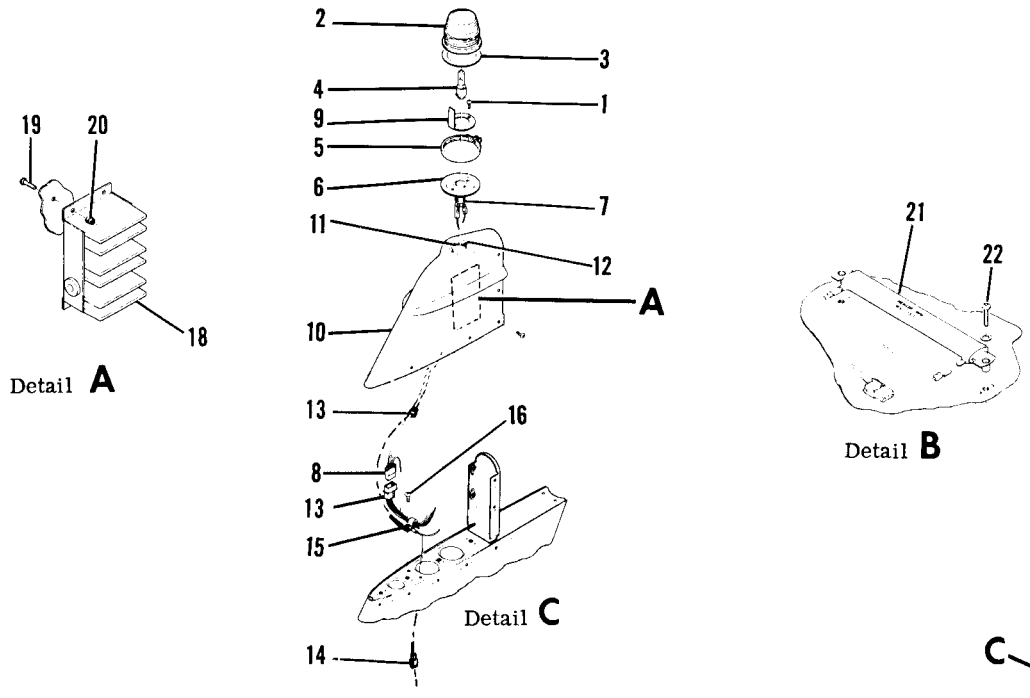

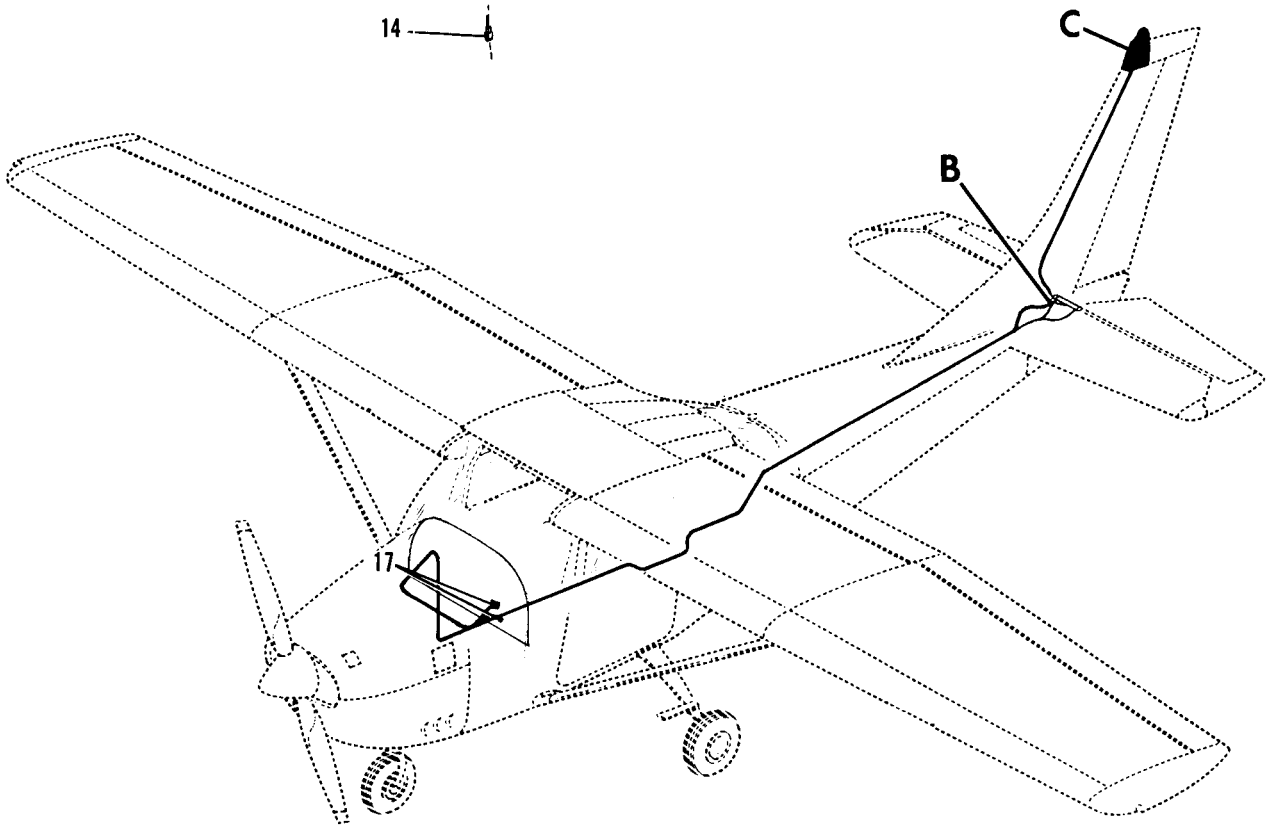

Figure 96. Flashing Beacon Light Installation

FIGURE AND INDEX NO.	PART NUMBER	DESCRIPTION 1 2 3 4 5 6 7	UNITS PER ASSY	USABLE ON CODE
96 -		FLASHING BEACON LIGHT INSTALLATION	NP	A
	C621001-0106	LIGHT ASSY-FLASHING BEACON	1	
		ATTACHING PARTS		
- 1	AN515-8R8	SCREW	2	
		---*---		
- 2	C17325	DOME AEFC	1	
- 3	C17330	GASKET AEFC	1	
- 4	C17312-3	LAMP AEFC	1	
- 5	C17326	CLAMP ASSY AEFC	1	
- 6	C17331-6	PLATE-MOUNTING AEFC	1	
- 7	C17313	SOCKET ASSY AEFC	1	
- 8	S1638-1	HOUSING PLUG	1	
- 9	0731607-1	BAFFLE	1	
-10	1231059-1	TIP ASSY-FIN	1	B
	1231064-1	TIP ASSY-FIN	1	C
-11	0431017-2	PLATE ASSY	1	
-12	NAS680A08	NUTPLATE	1	
-13	S1638-2	HOUSING-CAP	2	
-14	S1637-2	HOUSING-PLUG	1	
	S1637-1	HOUSING-CAP	1	
-15	AN742D4	CLAMP	1	
		ATTACHING PARTS		
-16	AN515-6R7	SCREW	1	
		---*---		
-17		CIRCUIT BREAKER SEE INSTRUMENT PANEL	1	
		SWITCH SEE INSTRUMENT PANEL	1	
-18	C594502-0101	FLASHER ASSY-BEACON LIGHT	1	
		ATTACHING PARTS		
-19	AN525-832R7	SCREW	4	
-20	MS21044N08	NUT	4	
		---*---		
-21	OR95-1.5	RESISTOR	1	
		ATTACHING PARTS		
-22	AN515-8R11	SCREW	2	
		---*---		

A---182 SERIAL 18262446 & ON
B---182 SERIAL 18262466 THRU 18264295
C---182 SERIAL 18264296 & ON

Electrical Equipment (Cont)

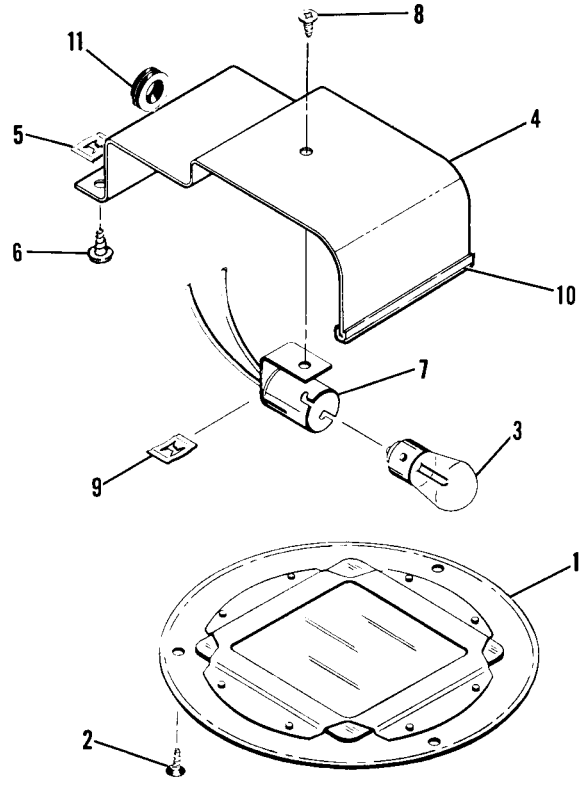

Figure 97. Courtesy Light Installation

FIGURE AND INDEX NO.	PART NUMBER	DESCRIPTION 1 2 3 4 5 6 7	UNITS PER ASSY	USABLE ON CODE
97 -		COURTESY LIGHT INSTALLATION	NP	
- 1	0762035-1	COVER PLATE ASSEMBLY	1	
		ATTACHING PARTS		
- 2	S1021Z8-8	SCREW	AR	
		---*---		
- 3	MS15584-2	LAMP	1	
- 4	0762036-1	SHIELD ASSEMBLY	1	
		ATTACHING PARTS		
- 5	NAS446-2-3	NUT	2	
- 6	S1021Z6-8	SCREW	2	
		---*---		
- 7	0513208-1	SOCKET-LAMP	1	
		ATTACHING PARTS		
- 8	S1021Z6-6	SCREW	1	
- 9	NAS446-2-3	NUT	1	
		---*---		
-10	S1055-1	CHANNEL 2.25 IN LG BULK ITEM REF S1055-1-2.25	1	
-11	MS35489-134	GROMMET	1	

Electrical Equipment (Cont)

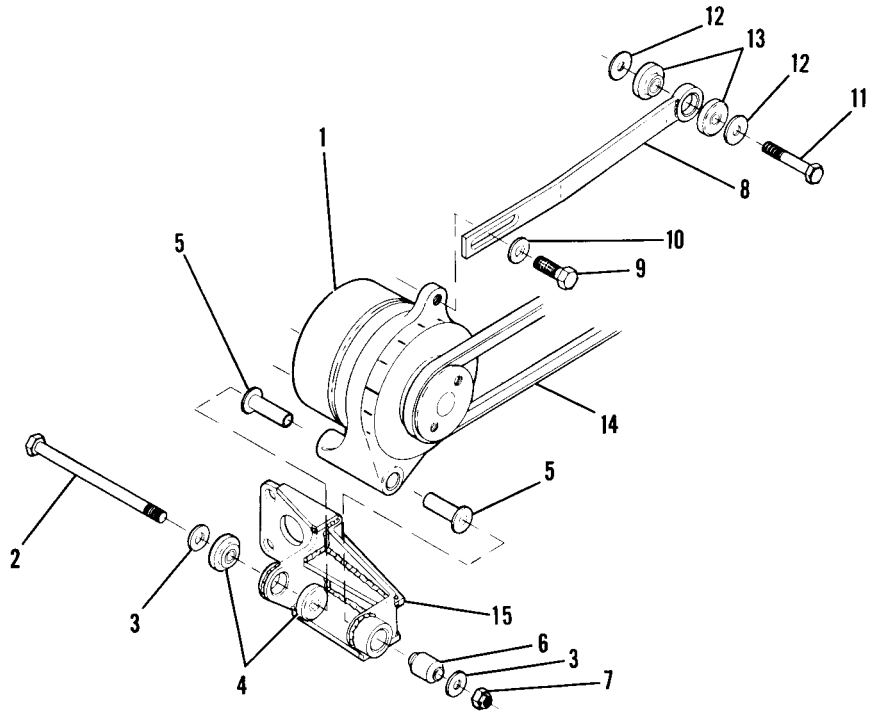

Figure 98. Shock Mounted Alternator Installation

FIGURE AND INDEX NO.	PART NUMBER	DESCRIPTION 1 2 3 4 5 6 7	UNITS PER ASSY	USABLE ON CODE
98 -		SHOCK MOUNTED ALTERNATOR INSTALLATION	NP	
- 1	C611501-0102	ALTERNATOR ASSEMBLY 60 AMP	1	
		ATTACHING PARTS		
- 2	AN5-52A	BOLT	1	
- 3	S1450-5H14-063	WASHER	2	
- 4	J9534-20	BUSHING RUBBER LO	2	
- 5	1250214-1	BUSHING	2	
- 6	J2005-2	MOUNT-BONDED LO	1	
- 7	NAS679A5	NUT	1	
		---*---		
- 8	1250215-1	ADJUSTING ARM ASSEMBLY-ALTERNATOR	1	
		ATTACHING PARTS		
- 9	0750220-1	BOLT	1	
-10	S1450-6-14-080	WASHER	1	
-11	MS20074-05-14	BOLT	1	
-12	S1450-5H14-040	WASHER	2	
-13	J9534-20	BUSHING-RUBBER LO	2	
		---*---		
-14	S1597-1-30.8	BELT-ALTERNATOR	1	
-15	1250213-15	SUPPORT ASSEMBLY-ALTERNATOR	1	

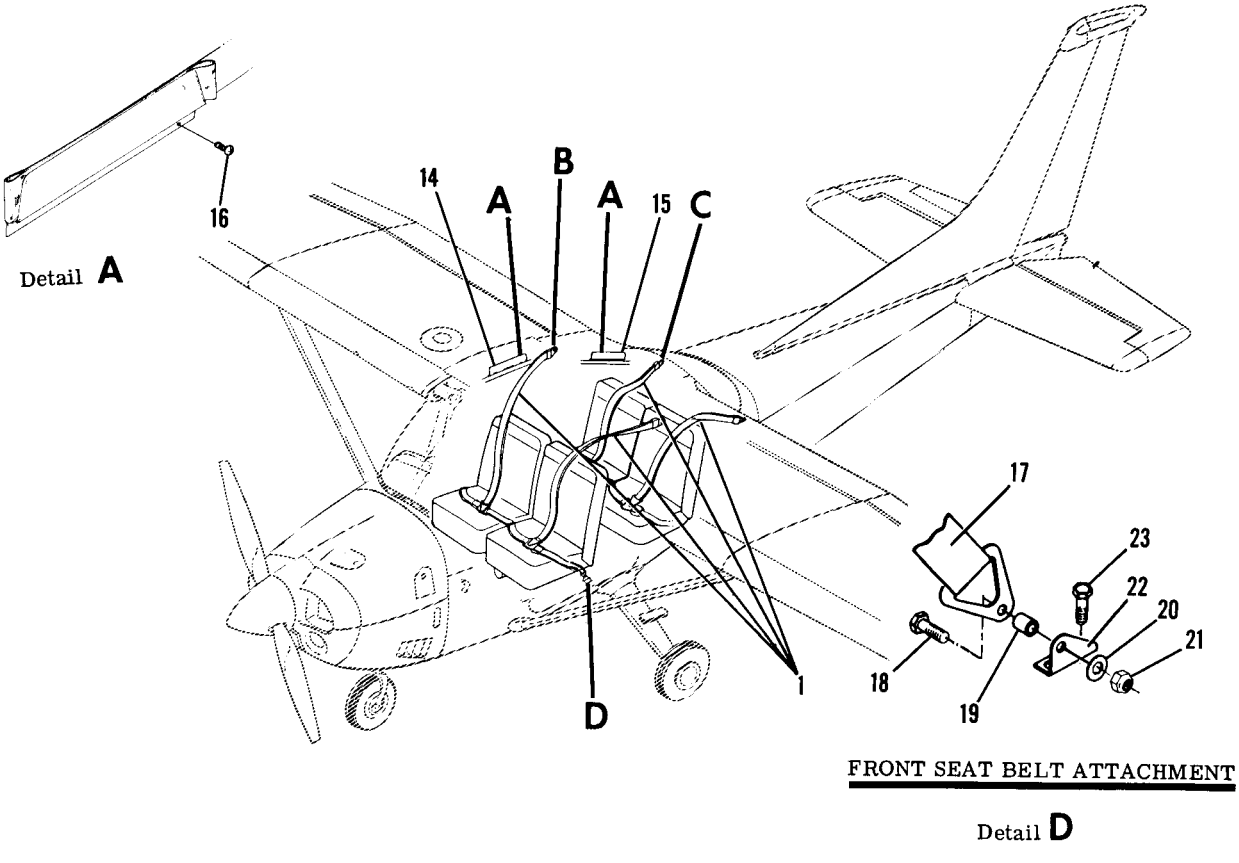

Figure 99. Seat Belt & Shoulder Harness Installation

FIGURE AND INDEX NO.	PART NUMBER		DESCRIPTION 1 2 3 4 5 6 7	UNITS PER ASSY	USABLE ON CODE
99 -			SEAT BELT & SHOULDER HARNESS INSTALLATION	NP	A
- 1	S2275CC201	%	HARNESS ASSY-SHOULDER BROWN	1	F
	S2275BB201	%	HARNESS ASSY-SHOULDER BLUE	1	F
	S2275AA201	%	HARNESS ASSY-SHOULDER GREEN	1	F
	S2275T201	%	HARNESS ASSY-SHOULDER RED	1	F
	S2275T201	%	HARNESS ASSY-SHOULDER GOLD	1	F
	S2275B201	%	HARNESS ASSY-SHOULDER BLACK	1	F
	S2275CC201		HARNESS ASSY-SHOULDER CHESTNUT BROWN	1	G
	S2275FF201		HARNESS ASSY-SHOULDER SAPPHIRE BLUE	1	G
	S2275GG201		HARNESS ASSY-SHOULDER ORO GREEN	1	G
	S2275EE201		HARNESS ASSY-SHOULDER RUBY RED	1	G
	S2275HH201		HARNESS ASSY-SHOULDER TOPAZ GOLD	1	G
	S2275B201		HARNESS ASSY-SHOULDER BLACK	1	G
			ATTACHING PARTS		
- 2	S2074-1		SPACER FWD	2	B
- 3	NAS464P4A8		BOLT FWD	1	B
- 4	S2074-1		SPACER AFT	3	B
- 5	NAS464P4A10		BOLT AFT	1	B
- 6	NAS43HT4-30		SPACER FWD	1	C
- 7	NAS43HT4-22		SPACER AFT	1	C
- 8	AN960-616		WASHER	2	C
- 9	2013131-1		SPACER FWD	1	C
-10	NAS464P4A8		BOLT	1	C
			---*---		
-11	S2076-1		COVER-SHOULDER HARNESS FITTING FWD	1	B
-12	0415010-1		COVER-SHOULDER HARNESS FITTING FWD	1	C
-13	0415010-1		COVER-SHOULDER HARNESS FITTING AFT	1	
-14	0515010-5		TRAY ASSY-SHOULDER HARNESS STOWAGE FWD	2	
-15	0515010-6		TRAY ASSY-SHOULDER HARNESS STOWAGE AFT	2	
			ATTACHING PARTS		
-16	S1021A4-6		SCREW	4	
			---*---		
-17	S2275CC103	%	BELT ASSY-FRONT SEAT BROWN	2	F
	S2275BB103	%	BELT ASSY-FRONT SEAT BLUE	2	F
	S2275AA103	%	BELT ASSY-FRONT SEAT GREEN	2	F
	S2275T103	%	BELT ASSY-FRONT SEAT RED	2	F
	S2275DD103	%	BELT ASSY-FRONT SEAT GOLD	2	F
	S2275B103	%	BELT ASSY-FRONT SEAT BLACK	2	F
	S2275CC103		BELT ASSY-FRONT SEAT CHESTNUT BROWN	1	G
	S2275FF103		BELT ASSY-FRONT SEAT SAPPHIRE BLUE	1	G
	S2275GG103		BELT ASSY-FRONT SEAT ORO GREEN	1	G
	S2275EE103		BELT ASSY-FRONT SEAT RUBY RED	1	G
	S2275HH103		BELT ASSY-FRONT SEAT TOPAZ GOLD	1	G
	S2275B103		BELT ASSY-FRONT SEAT BLACK	1	G
			ATTACHING PARTS		
-18	AN4-5A		BOLT	2	
-19	NAS43HT4-12		SPACER	2	
-20	AN960-416L		WASHER	2	
-21	MS21042L4		NUT	2	
			---*---		
-22	0510205-5		FITTING-SEAT BELT INBD LH & OUTBD RH	2	D
	0510205-7		FITTING-BELT INBD LH & OUTBD RH	2	E
	0510205-6		FITTING-SEAT BELT OUTBD LH & INBD RH	2	D
	0510205-8		FITTING-SEAT BELT OUTBD LH & INBD RH	2	E
			ATTACHING PARTS		
-23	AN3-4A		BOLT	2	D
	AN4-4A		BOLT	2	E
			---*---		

NOTE. %WHEN INITIALLY ORDERING SEAT BELT OR SHOULDER HARNESS FOR AIRCRAFT PRIOR TO SERIAL 18264256, BOTH SEAT BELT & SHOULDER HARNESS MUST BE REPLACED

A---182 SERIAL 18262466 & ON
B---182 SERIAL 18262466 THRU 18262939
C---182 SERIAL 18262940 & ON
D---182 SERIAL 18262466 THRU 18263475
E---182 SERIAL 18263476 & ON
F---182 SERIAL 18262466 THRU 18264295
G---182 SERIAL 18264296 & ON

Console Cover & Lighting

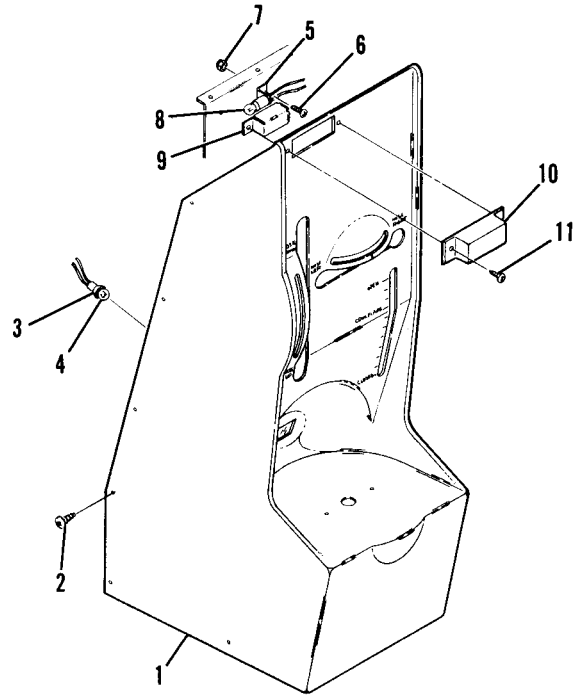

Figure 100. Console Cover & Lighting Installation

FIGURE AND INDEX NO.	PART NUMBER		DESCRIPTION 1 2 3 4 5 6 7	UNITS PER ASSY	USABLE ON CODE
100 -			CONSOLE COVER & LIGHTING INSTALLATION ----------	NP	A
- 1	0713811-5	¤	COVER ASSY ----------	1	B
	0713811-7	¤	COVER ASSY ----------	1	C
			ATTACHING PARTS		
- 2	S1021Z8-6		SCREW ----------	11	
			---*---		
- 3	4165-447		LAMPHOLDER ----------	1	
- 4	53		LAMP ----------	1	
- 5	4165-308		LAMPHOLDER ----------	1	
			ATTACHING PARTS		
- 6	AN515-4R6		SCREW ----------	1	
- 7	NAS679A04		NUT ----------	1	
			---*---		
- 8	53		LAMP ----------	1	
- 9	0713972-4		REFLECTOR-LAMP ----------	1	
-10	0713972-1	¤	COVER ASSY-LIGHT ----------	1	
			ATTACHING PARTS		
-11	S1021A6-8		SCREW ----------	2	
			---*---		

NOTE. ¤THIS PART NUMBER MUST HAVE A SECOND DASH NUMBER ADDED TO DENOTE COLOR. REFER TO HOW TO ORDER INTERIOR PARTS-PAGE XIII.

A---182 SERIAL 18262466 & ON
B---182 SERIAL 18262466 THRU 18264295
C---182 SERIAL 18264296 & ON

This page intentionally left blank.

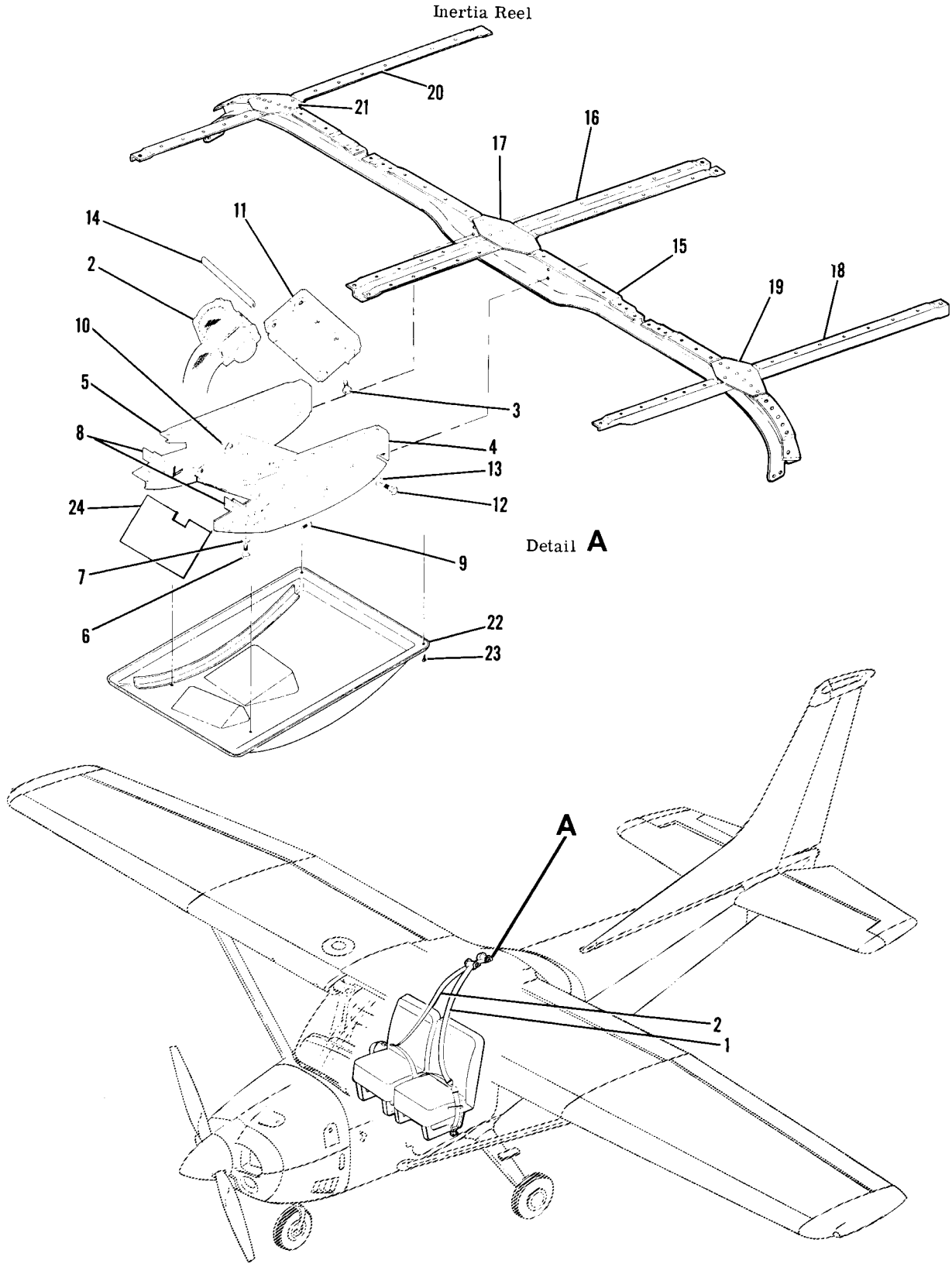

182 SERIAL 18263476 & ON

Figure 101. Inertia Reel Installation

FIGURE AND INDEX NO.	PART NUMBER		DESCRIPTION 1 2 3 4 5 6 7	UNITS PER ASSY	USABLE ON CODE
101 -			INERTIA REEL INSTALLATION	NP	A
- 1	S2199-3		BELT ASSY-LH BLACK ONLY	1	
- 2	S2199-4		BELT ASSY-RH BLACK ONLY	1	
			ATTACHING PARTS		
- 3	NAS222-9		SCREW	2	
			---*---		
- 4	0701073-1		RIB ASSY-LH	1	
- 5	0701073-2		RIB ASSY-RH	1	
			ATTACHING PARTS		
- 6	AN3-3A		BOLT	2	
- 7	AN960-10L		WASHER	2	
			---*---		
- 8	0701075-1		SUPPORT ANGLE ASSY	2	
			ATTACHING PARTS		
- 9	AN525-832R7		SCREW	2	
			---*---		
	NAS697A3		NUTPLATE	1	
-10	0701074-1		PLATE ASSY-ATTACH FWD	1	
-11	0701074-10		PLATE ASSY-ATTACH AFT	1	
			ATTACHING PARTS		
-12	AN3-3A		BOLT	4	
-13	AN960-10L		WASHER	4	
			---*---		
	NAS696A3		NUTPLATE	1	
	NAS697A3		NUTPLATE	3	
-14	S2195-2		TRIM-4.00 IN LG BKI REF S2195-1-4.00	2	
-15	0701072-1		BULKHEAD ASSY	1	
-16	0711684-3		STIFFENER-CENTER	1	
	0711678-5		STIFFENER-INBD LH	1	
	0711678-6		STIFFENER-INBD RH	1	
-17	0701076-3		DOUBLER	3	
-18	0711677-3		STIFFENER-LH	1	
-19	0701076-1		DOUBLER-LH	1	
-20	0711677-4		STIFFENER-RH	1	
-21	0701076-2		DOUBLER-RH	1	
-22	0701079-1	¤	COVER ASSY-INERTIA REEL	1	
			ATTACHING PARTS		
-23	S1021Z4-6		SCREW	4	
			---*---		
-24	0715059-1	¤	BAFFLE-INERTIA REEL	1	

NOTE. ¤THIS PART MUST HAVE A SECOND DASH NUMBER ADDED TO DENOTE COLOR, REFER TO HOW TO ORDER INTERIOR PARTS-PAGE VII.

A---182 SERIAL 18263476 & ON

This page intentionally left blank.

NUMERICAL INDEX

PART NUMBER	FIGURE AND INDEX NO.
AN123883	90 -18
AN155-16S	82A-44
AN155B16S	83 - 4
AN155B32L	80 - 5
AN155B32L	80 -12
AN155B32S	80 -16
AN155B32S	81 - 8
AN155B32S	83 - 5
AN155B32S	85 - 6
AN155B325	77 -47
AN155B8S	82 - 3
AN155B8S	84 -37
AN161-32LL	80 - 6
AN161-32LL	80 -11
AN161-8LS	84 -38
AN165-22RS	81 - 9
AN173-12A	35 - 7
AN173-12A	35 - 8
AN173-12A	35 -15
AN175-7A	18 -18
AN21-10	77 -59
AN21-10	81 - 3
AN23-10	85 - 8
AN23-10A	81 - 6
AN23-10A	85 - 3
AN23-15A	51 -19
AN23-15A	53 -22
AN23-19A	51 - 2
AN23-19A	51 -32
AN23-20A	52 -80
AN23-20A	52A-90
AN24-13A	51 -23
AN24-13A	51 -24
AN24-14	81 -22
AN24-16A	51 -25
AN2552-3A	93 -15
AN256F8	82A- 4
AN3-10A	11 - 7
AN3-10A	16 -43
AN3-10A	53 -18
AN3-10A	53 -31
AN3-10A	70 - 5
AN3-10A	75 -26
AN3-10A	82 -16
AN3-10A	82 -29
AN3-10A	83 -36
AN3-10A	84 -33
AN3-11A	11 - 2
AN3-11A	53 - 4
AN3-11A	64 -23
AN3-11A	70 -12
AN3-11A	75 -17
AN3-11A	83 -11
AN3-11A	84 -16
AN3-12A	92 -72
AN3-12A	92 -78
AN3-12A	92A-72
AN3-13A	74 -46
AN3-13A	84 -49
AN3-13A	92 -15
AN3-13A	92 -72
AN3-13A	92A-15
AN3-13A	92A-66
AN3-14A	75 -31
AN3-15A	58 -13
AN3-15A	58 -16
AN3-17A	52 - 2
AN3-17A	52A- 2
AN3-20A	19 - 7
AN3-21A	19 - 4
AN3-21A	80 -45
AN3-21A	83 -26
AN3-24A	53 -25
AN3-3A	24 -46

PART NUMBER	FIGURE AND INDEX NO.
AN3-3A	24 -47
AN3-3A	24 -48
AN3-3A	24 -48
AN3-3A	26 -11
AN3-3A	32 -18
AN3-3A	64 - 9
AN3-3A	64 -41
AN3-3A	74 -25
AN3-3A	78 -28
AN3-3A	78A-23
AN3-3A	82 - 4
AN3-3A	85 -28
AN3-3A	91 -13
AN3-3A	93 -52
AN3-3A	101 - 6
AN3-3A	101 -12
AN3-4A	11 -26
AN3-4A	17 -13
AN3-4A	26 -78
AN3-4A	51 -57
AN3-4A	52 -98
AN3-4A	61 - 7
AN3-4A	65 -50
AN3-4A	68 - 4
AN3-4A	68 - 9
AN3-4A	68A- 4
AN3-4A	75 -12
AN3-4A	84 -43
AN3-4A	92 -73
AN3-4A	92 -84
AN3-4A	92A-67
AN3-4A	92A-77
AN3-4A	99 -23
AN3-5A	32 -16
AN3-5A	64 -22
AN3-5A	65 -48
AN3-5A	74 -49
AN3-5A	84 -20
AN3-5A	84 -24
AN3-5A	92 -28
AN3-6A	46 - 5
AN3-6A	64 -30
AN3-6A	74 -32
AN3-6A	74 -40
AN3-6A	79 -11
AN3-6A	82 -12
AN3-6A	83 -18
AN3-6A	83 -34
AN3-60A	69 -90
AN3-67A	69 -87
AN3-7A	10 - 9
AN3-7A	64 -16
AN3-7A	80 - 2
AN3-7A	80 - 8
AN3-7A	82A- 1
AN3-7A	84 -28
AN3H3A	36 -40
AN310-3	36 -51
AN310-3	77 -48
AN310-3	85 - 4
AN310-3	85 - 9
AN310-4	36 -34
AN310-4	36 -47
AN310-4	70 -18
AN310-4	83 -49
AN310-5	34 -12
AN310-5	34 -24
AN310-5	77 -36
AN315-3R	64 -20
AN315-3R	85 -33
AN315-4R	43 -18A
AN315-4R	44 -18A
AN315-4R	44A-19
AN316-4	70 - 3

PART NUMBER	FIGURE AND INDEX NO.
AN316-4R	10 -12
AN316-4R	11 - 6
AN316-4R	70 -15
AN316-4R	76 - 3
AN320-1	77 -59
AN320-1	81 - 4
AN320-4	81 -23
AN320C3	82 -25
AN340-3	78A-31
AN340-4	84 -14
AN340-4	94 - 5
AN340-4	95 - 7
AN340-8	58 -41
AN340B8	55 -44
AN340B8	55A-46
AN340B8	55B-50
AN345-10	92 -49
AN365-428	41 -14
AN4-10A	81 -31
AN4-10A	81 -39
AN4-10A	81 -44
AN4-10A	85 -18
AN4-10A	85 -23
AN4-11A	14 - 1
AN4-11A	15 - 1
AN4-11A	16 - 1
AN4-11A	16 -59
AN4-11A	64 -34
AN4-11A	80 -34
AN4-12A	32 -33
AN4-12A	53 -42
AN4-12A	81 -11
AN4-13A	54 - 3
AN4-14A	32 -37
AN4-15	83 -48
AN4-17A	54 - 7
AN4-20A	53 -45
AN4-22A	37 - 9
AN4-22A	85 -12
AN4-31	36 -30
AN4-31	36 -43
AN4-31A	81 -15
AN4-36A	41 -12
AN4-4A	51 -57
AN4-4A	93 - 9
AN4-4A	93 -55
AN4-4A	99 -23
AN4-42A	10 - 2
AN4-42A	80 -39
AN4-5	70 -17
AN4-5A	51 -52
AN4-5A	52 -93
AN4-5A	53 - 1
AN4-5A	53 - 6
AN4-5A	93 -45
AN4-5A	99 -18
AN4-56A	83 -31
AN4-56A	83 -39
AN4-6A	13 - 1
AN4-6A	13A- 1
AN4-6A	54 -16
AN4-6A	58 - 4
AN4-6A	88 -31
AN4-7A	16 -60
AN4-7A	34 - 5
AN4-7A	58 - 3
AN4H21A	42 -25
AN4022-1	89 - 1
AN4022-1	89 - 2
AN4022-1	89 - 4
AN4022-1	89 - 6
AN4023-1	64 -49
AN415-2	31 -12
AN446-4	92A-47

PART NUMBER	FIGURE AND INDEX NO.
AN5-10A	34 - 3
AN5-11A	80 -18
AN5-11A	81 -34
AN5-12A	83 -14
AN5-13A	80 -22
AN5-13A	80 -29
AN5-17A	40 -20
AN5-17A	40A-20
AN5-21A	40 -20
AN5-21A	40A-20
AN5-27A	36 - 7
AN5-31A	34 - 2
AN5-33A	36 - 4
AN5-47	34 -11
AN5-51A	34 -19
AN5-52A	98 - 2
AN5-6A	13 - 2A
AN5-6A	13A- 2
AN5-6A	18 -16
AN5-7A	6 -14
AN5-7A	13 - 2
AN5-7A	13A- 2
AN5-7A	58 -26
AN500-10-10	87 -25
AN500A8-5	82A-29
AN500A8-7	8 -22
AN500B8-6	60 - 7
AN507-1032R12	43 - 2
AN507-1032R12	44 - 2
AN507-1032R12	44A- 2
AN507-1032R12	72 -10
AN507-1032R14	58 -20
AN507-1032R14	72 -10A
AN507-1032R8	79 -19
AN507-428R7	8 -39
AN507-428R7	8 -44
AN507-440R6	82A-15
AN507-6R8	93 -35
AN507-632R12	3 -33
AN507-632R12	45 - 6
AN507-632R4	20 -13
AN507-632R6	82A- 8
AN507-632R8	3 -24
AN507-632R8	3 -32
AN507-640R4	86 -23
AN507-832R12	92 - 5
AN507-832R12	92A- 5
AN507-832R12	95 -14
AN507-832R14	51 - 8
AN507-832R14	53 -21
AN507-832R6	3 -36
AN507-832R6	18 -65
AN507-832R6	43 -27
AN507-832R6	44A-69
AN507-832R6	46 -20
AN507-832R6	69 -69
AN507-832R6	77 -24
AN507-832R7	13A-41
AN507-832R7	77 -24
AN507-832R7	86 -37
AN507-832R8	24 -23
AN507B632R12	55 -52
AN507B632R12	55 -53
AN507B632R12	55A-55
AN507B632R12	55A-56
AN507B632R12	93 - 7
AN507B632R6	55 -54
AN507B632R6	55A-57
AN507B832R14	60 -16
AN507B832R24	55 -44
AN507B832R24	55A-46
AN507B832R8	60 - 5
AN507DD40R8	92A-22
AN507DD440R8	92 -22

PART NUMBER	FIGURE AND INDEX NO.
AN509-10R14	43 - 1
AN509-10R14	44 - 1
AN509-10R14	44A- 1
AN509-10R14	93 -16
AN509-10R23	16 -43
AN509-10R31	14 -13
AN509-10R4	8 - 5
AN509-10R6	8 -38
AN509-10R6	8 -43
AN509-10R8	40 -10
AN509-10R8	40A-10
AN509-10R8	43 -25
AN509-10R8	44 -22
AN509-10R8	44A-25
AN509-10R8	63 -90
AN509-10R8	71 - 6
AN509-416R12	15 -50
AN509-416R13	15 -51
AN509-8R14	87 -11A
AN510B4R6	60 -14
AN515-10R6	82A-38
AN515-10R6	82A-43
AN515-10R8	76 -15
AN515-10R8	88 - 1
AN515-4-9	83 -45
AN515-4R10	47 -25
AN515-4R12	84 -12
AN515-4R4	64 -50
AN515-4R4	93 - 1
AN515-4R6	94 - 4
AN515-4R6	100 - 6
AN515-6R10	10 -33
AN515-6R10	14 -33A
AN515-6R10	14 -34
AN515-6R10	14 -34
AN515-6R10	73 -31
AN515-6R10	91 - 4
AN515-6R12	91 - 4
AN515-6R6	14 -34
AN515-6R6	17 -15
AN515-6R6	20 -17
AN515-6R6	20 -22
AN515-6R6	32 -31
AN515-6R6	40A-44
AN515-6R6	55 -38
AN515-6R6	55 -39
AN515-6R6	55A-40
AN515-6R6	55A-41
AN515-6R6	77 -69
AN515-6R6	91 - 2
AN515-6R6	91 - 4
AN515-6R7	96 -16
AN515-6R8	30 -79
AN515-6R8	55B- 4
AN515-6R8	74 -18
AN515-6R8	78 -26
AN515-8-10	72 -27
AN515-8-8	92 - 9
AN515-8-8	92A- 9
AN515-8R10	58 -40
AN515-8R10	82A-11
AN515-8R11	96 -22
AN515-8R12	48 - 2
AN515-8R12	80 -50
AN515-8R12	83 - 9
AN515-8R14	73 -14
AN515-8R24	95 -23
AN515-8R4	40 -31
AN515-8R4	40 -72
AN515-8R4	40A-31
AN515-8R6	8 -31
AN515-8R6	16 -66
AN515-8R6	21 -21
AN515-8R6	26 -58

PART NUMBER	FIGURE AND INDEX NO.
AN515-8R6	49 -34
AN515-8R6	52 -73
AN515-8R6	52A-82
AN515-8R6	79 - 7
AN515-8R6	86 -39
AN515-8R7	26 -64
AN515-8R7	57 - 2
AN515-8R7	82A-34
AN515-8R8	8 -21
AN515-8R8	12 -19
AN515-8R8	46 -26
AN515-8R8	54 - 2
AN515-8R8	54 -21
AN515-8R8	63 -88
AN515-8R8	77 -64
AN515-8R8	82B-15
AN515-8R8	95 - 3
AN515-8R8	96 - 1
AN515-832-5	93 -61
AN515B6R12	55 -30
AN515B6R12	55 -31
AN515B6R12	55 -32
AN515B6R12	55 -40
AN515B6R12	55 -42
AN515B6R12	55 -43
AN515B6R12	55 -56
AN515B6R12	55 -57
AN515B6R12	55A-32
AN515B6R12	55A-33
AN515B6R12	55A-34
AN515B6R12	55A-42
AN515B6R12	55A-44
AN515B6R12	55A-45
AN515B6R12	55A-59
AN515B6R12	86 - 1
AN515B6R12	86 - 2
AN515B6R12	86 - 3
AN515B6R12	91 -29
AN515B6R16	55 -37
AN515B6R16	55A-39
AN515B6R16	86A- 4
AN515B6R7	86A- 3
AN515B8R12	55 -27
AN515B8R8	55 -26
AN515B8R8	55A-25
AN5154R4	93 - 3
AN520-10P12	40A-43
AN520-10R10	8 -27
AN520-10R10	58 -55
AN520-10R10	71 - 3
AN520-10R12	34 -36
AN520-10R12	40 -43
AN520-10R12	40A-57
AN520-10R12	47 -21
AN520-10R12	49 -20
AN520-10R14	58 -52
AN520-10R16	40 -57
AN520-10R26	70 -10
AN520-10R6	34 -29
AN520-10R6	40 -37
AN520-10R6	40A-37
AN520-10R6	91 -63
AN520-10R6	93 -39
AN520-10R7	58 -50
AN520-10R7	93 -36
AN520-10R8	4 -37
AN520-10R8	4 -38
AN520-10R8	52 -31
AN520-10R8	52 -58
AN520-10R8	52A-39
AN520-10R8	52A-66
AN520-10R8	82 -21
AN520-10R8	87 -30
AN520-10R8	88 -22

PART NUMBER	FIGURE AND INDEX NO.
AN520-10R8	92 -49
AN520-3R10	78A-28
AN520-3R8	78A-12
AN520-416R8	93 -10
AN520-416R8	93 -25
AN520-8R6	63 -57
AN520-8R6	72A-23
AN520-8R6	72A-25
AN525-10R10	40 -60
AN525-10R10	40A-66
AN525-10R12	40 -59
AN525-10R12	58 -43
AN525-10R14	40 -66
AN525-10R16	40 -65
AN525-10R18	45 -13
AN525-10R18	58 -43
AN525-10R22	79 -14
AN525-10R6	40A-67
AN525-10R6	69 - 2
AN525-10R6	69 - 8
AN525-10R6	69 -10
AN525-10R6	69 -14
AN525-10R6	69 -21
AN525-10R6	69 -27
AN525-10R6	79 -21
AN525-10R7	40A-68
AN525-10R7	87 -47
AN525-10R8	19 -21
AN525-10R8	43 -59
AN525-10R8	44A-56
AN525-10R8	88 -24
AN525-10R9	40A-65
AN525-8R7	93 - 1
AN525-832R10	55 -24
AN525-832R12	40A-73
AN525-832R6	13 -43
AN525-832R6	13A-37
AN525-832R6	13A-43
AN525-832R6	40 -47
AN525-832R6	40A-48
AN525-832R6	69 -22
AN525-832R6	69 -33
AN525-832R6	69 -35
AN525-832R6	69 -60
AN525-832R6	87 -35
AN525-832R7	13 - 7
AN525-832R7	13 -41
AN525-832R7	13A- 6A
AN525-832R7	13A-45
AN525-832R7	15 -54
AN525-832R7	43 -41
AN525-832R7	44 -38
AN525-832R7	44A-42
AN525-832R7	46 -12
AN525-832R7	96 -19
AN525-832R7	101 - 9
AN525-832R8	3 -21
AN525-832R8	18 -76
AN525-832R8	55 -25
AN525-832R8	55A-24
AN525-832R8	69 -45
AN525-832R8	69 -53
AN525-832R8	69 -62
AN525-832R8	69 -67
AN525-832R8	92 -40
AN525-832R8	92A-34
AN530-6R10	33 - 4
AN565B2-3	55 -69
AN565B2H3	55 -69
AN565B2H3	55A-71
AN565B2H3	78A-22
AN565B4-2	78 -13
AN565B4-2	78A-10
AN565B428H4	83 -50

PART NUMBER	FIGURE AND INDEX NO.
AN565D6-3	76 -14
AN565D8H2	55A-70
AN565D8H3	83 -50
AN6-15A	83 -40
AN6-17A	40 -23
AN6-21A	40 -23
AN6-21A	40A-23
AN6-25A	64 - 3
AN6-34A	64 - 2
AN6-6A	40 -50
AN6-6A	40A-50
AN617A	40A-23
AN6227-5	82B- 7
AN6227B26	36 -10
AN6227B3	39 -12
AN6227B32	36 -23
AN6227B5	36 -13
AN6227B8	76 - 8
AN6230B2	41 -21
AN6230B2	42 -31
AN6230B3	36 -16
AN6230B6	36 -25
AN7-20A	3 - 4
AN7-33A	65 - 6
AN735-9	85 -29
AN735D20	58 -39
AN737RM30	8 -15
AN737RM30	87 - 2
AN741-18P	64 -23
AN741TD7	88 -30
AN742D12	65 -15
AN742D3	64 - 7
AN742D3	64 - 8
AN742D3	92 -27
AN742D32	73 -27
AN742D34	64 -42
AN742D34	65 -15
AN742D36	73 -19
AN742D4	4 - 4
AN742D4	64 -40
AN742D4	86 -18
AN742D4	96 -15
AN742D50	73 -19
AN742D8	87 -47
AN743-12	74 -18
AN743-12	92A-92
AN780-2	89 - 1
AN780-2	89 - 2
AN780-2	89 - 5
AN780-2	89 - 6
AN8-20A	12 - 6
AN8-23A	3 - 1
AN8-25A	12 - 2
AN804D8	87 -21
AN815-3D	74 -12
AN815-3D	74 -17
AN815-3D	74 -20
AN815-8D	87 -14
AN815-8D	87 -19
AN816-2D	87 -44
AN816-2D	89 - 8
AN816-4D	91 -20
AN816-4D	91 -27
AN816-4D	91 -55
AN816-4D	92 -89
AN816-4D	92 -94B
AN816-4D	92A-94A
AN816-6D	91 - 6
AN816-6D	91 -18
AN816-6D	91 -40
AN818-2D	55 -56
AN821-4D	92 -95B
AN821-4D	92A-93
AN824-4D	92 -92

PART NUMBER	FIGURE AND INDEX NO.
AN824-4D	92A-84
AN827-4D	92A-86
AN832-2D	69 -76
AN832-2D	89 -17
AN832-3D	74 - 6
AN833-2D	64 -43
AN833-2D	89 -17
AN833-3D	40 -34
AN833-3D	40A-34
AN833-3D	74 -22
AN834-2D	64 -46
AN837-4D	90 - 3
AN844-4D	91 -56
AN900-10	64 -42
AN900-6	65 -45
AN910-1	92 - 2
AN910-1	92A- 2
AN911-1D	86 -15
AN912-3	65 -39
AN912-4D	91 -36
AN914-1D	41 -30
AN916-1D	86 -14
AN916-416	54 - 4
AN921-3D	74 - 3
AN924-10D	91 -31
AN924-2D	64 -43
AN924-2D	64 -48
AN924-2D	69 -76
AN924-2D	89 -17
AN924-3D	40 -34
AN924-3D	40A-34
AN924-3D	74 - 4
AN924-3D	74 - 5
AN924-3D	74 -21
AN924-4	65 -59
AN924-4D	90 - 3
AN924-8D	87 -21
AN932-S2	92 -65
AN932-S2	92A-61
AN932C4	90 -15
AN935-10	87 -26
AN935-8L	82A-11
AN936-A3	78A-30
AN936A10	88 - 2
AN936A4	83 -45
AN936A416	51 -26
AN936A416	60 -19
AN936A416	93 -47
AN936A416B	86A- 3
AN936A6	10 -33
AN936A6	93 -35
AN936A616	51 -26
AN936A8	34 -33
AN936A8	40 -32
AN936A8	40 -72
AN936A8	40A-32
AN936A8	55B-49
AN936A8	87 -36
AN936B10	64 -23
AN936B6B	55 -31
AN936B6B	55A-33
AN936D6	14 -34
AN944-101A	36 -38
AN960-D10L	60 -11
AN960-10	4 -28
AN960-10	11 - 3
AN960-10	14 -14
AN960-10	15 -36
AN960-10	19 - 8
AN960-10	32 -16
AN960-10	34 - 8
AN960-10	34 -30
AN960-10	34 -37
AN960-10	35 - 9

PART NUMBER	FIGURE AND INDEX NO.
AN960-10	40 -57
AN960-10	40A-58
AN960-10	46 - 8
AN960-10	52 -64
AN960-10	52A-72
AN960-10	58 -45
AN960-10	58 -45
AN960-10	61 - 8
AN960-10	64 -26
AN960-10	68 -10
AN960-10	68A- 4
AN960-10	75 -31
AN960-10	83 -19
AN960-10	83 -37
AN960-10	84 -29
AN960-10	92 -18
AN960-10	92 -25
AN960-10	92 -28
AN960-10	92A-18
AN960-10	92A-25
AN960-10	92A-45
AN960-10L	10 -10A
AN960-10L	16 -43
AN960-10L	18 -77
AN960-10L	35 -16
AN960-10L	36 -50
AN960-10L	40 -12
AN960-10L	40A-12
AN960-10L	43 - 3
AN960-10L	44 - 3
AN960-10L	44A- 3
AN960-10L	51 - 6
AN960-10L	51 -33
AN960-10L	52 - 3
AN960-10L	52 - 5
AN960-10L	52 -32
AN960-10L	52 -52
AN960-10L	52 -59
AN960-10L	52 -77
AN960-10L	52 -81
AN960-10L	52A- 3
AN960-10L	52A- 5
AN960-10L	52A-40
AN960-10L	52A-60
AN960-10L	52A-67
AN960-10L	52A-87
AN960-10L	52A-91
AN960-10L	53 - 5
AN960-10L	53 -19
AN960-10L	53 -28
AN960-10L	58 -47
AN960-10L	59 - 4
AN960-10L	64 -12
AN960-10L	65 -32
AN960-10L	65 -48
AN960-10L	65 -50
AN960-10L	70 - 6
AN960-10L	70 -10
AN960-10L	70 -13
AN960-10L	71 - 4
AN960-10L	72 -29
AN960-10L	72 -42
AN960-10L	72A- 8
AN960-10L	73 -11
AN960-10L	73 -39
AN960-10L	74 -40
AN960-10L	78 -28
AN960-10L	78A-23
AN960-10L	79 -11
AN960-10L	82 -24
AN960-10L	84 -20
AN960-10L	84 -21
AN960-10L	84 -24
AN960-10L	84 -34

PART NUMBER	FIGURE AND INDEX NO.
AN960-10L	84 -40
AN960-10L	84 -43
AN960-10L	84 -49
AN960-10L	88 -32
AN960-10L	93 -39
AN960-10L	93 -42
AN960-10L	101 - 7
AN960-10L	101 -13
AN960-1216L	87 -21
AN960-1216L	87 -21
AN960-4	5 - 8
AN960-4	5 - 9
AN960-416	13 - 3
AN960-416	13A- 3
AN960-416	14 - 2
AN960-416	15 - 2
AN960-416	15 -51
AN960-416	16 - 2
AN960-416	32 -34
AN960-416	32 -38
AN960-416	37 -10
AN960-416	41 -13
AN960-416	53 -16
AN960-416	54 - 8
AN960-416	54 -17
AN960-416	58 - 3
AN960-416	77 -31
AN960-416	80 -35
AN960-416	80 -46
AN960-416	81 -12
AN960-416	81 -16
AN960-416	83 -24
AN960-416	85 -16
AN960-416	88 -26
AN960-416L	36 -33
AN960-416L	36 -46
AN960-416L	41 -23
AN960-416L	41 -26
AN960-416L	42 -21
AN960-416L	42 -26
AN960-416L	51 -54
AN960-416L	52 -12
AN960-416L	52 -95
AN960-416L	52A-20
AN960-416L	53 - 2
AN960-416L	53 -43
AN960-416L	64 -37
AN960-416L	64 -39
AN960-416L	69 -25
AN960-416L	69 -39
AN960-416L	70 -20
AN960-416L	73 -33
AN960-416L	77 -32
AN960-416L	79 -12
AN960-416L	81 -28
AN960-416L	81 -40
AN960-416L	81 -45
AN960-416L	82 -17
AN960-416L	82A-26
AN960-416L	85 -13
AN960-416L	85 -19
AN960-416L	88 -27
AN960-416L	93 - 9
AN960-416L	93 -46
AN960-416L	93 -55
AN960-416L	99 -20
AN960-516	6 -15
AN960-516	13 - 4
AN960-516	13A- 4
AN960-516	18 -17
AN960-516	34 - 2
AN960-516	58 -10
AN960-516	80 -18
AN960-516	80 -30

PART NUMBER	FIGURE AND INDEX NO.
AN960-516	81 -35
AN960-516L	32 - 6
AN960-516L	34 -14
AN960-516L	34 -19A
AN960-516L	40 -17
AN960-516L	40 -21
AN960-516L	40A-17
AN960-516L	40A-21
AN960-516L	58 -27
AN960-516L	77 -35
AN960-516L	80 -23
AN960-516L	83 -15
AN960-6	20 -17
AN960-6L	74 -18
AN960-6L	95 -19
AN960-6L	95 -25
AN960-616	35 - 3
AN960-616	40 -52
AN960-616	40A-52
AN960-616	64 - 5
AN960-616	83 -41
AN960-616	99 - 8
AN960-616L	40 -24
AN960-616L	40 -51
AN960-616L	40A-24
AN960-616L	40A-51
AN960-716	3 - 5
AN960-716L	65 - 7
AN960-8	52 -87
AN960-8	52A-98
AN960-8	72 -27
AN960-8L	95 -23
AN960-8L	95 -23
AN960-816	3 - 2
AN960-816	12 - 4
AN960-816	12 - 7
AN960A3	14 -35
AN960A6	14 -34
AN960D10	19 - 3
AN960D10	64 -18
AN960D10L	45 -10
AN960D416L	34 - 5
AN960D516	64 -43
AN960D516	64 -47
AN960D516	69 -76
AN960D516	89 -17
AN960D6	77 -59
AN960D6	81 - 4
AN960D716	90 - 3
AN960D8	92 -41
AN960D8	92A-35
AN960PD10	40 -67
AN960PD10	79 -16
AN960PD1416L	91 -32
AN960PD616	40 -34
AN960PD616	40A-34
AN960PD616	74 - 7
AN960PP616	74 -21
AN970-3	46 - 7
AN970-3	92 -75
AN970-3	92 -80
AN970-3	92A-69
AN970-3	92A-74
AN970-4	64 -35
AN970-5	58 - 9
AN970-5	58 -29
A08-75	12 -18
A08-75	12 -20
A08-75	12 -21
A1257A	3 -26
A1280-2	3 -27
A1280-3	3 -27
A1633-12	62 -22
A1633-3	62 - 7

PART NUMBER	FIGURE AND INDEX NO.
A1633-37	62 -44
A1633-9	62 -29
A1634-6	62 -41
A1635-36	62 - 9
A1635-37	62 - 9
A1635-40	62 - 9
A1635-56	62 - 9
A1635-66	62 -28
A1635-67	62 - 9
A1635-68	62 - 9
A1635-70	62 -15
A1635-73	42 -16
A1636-23	38 -11
A1636-24	42 -14
A1636-7	62 -20
A1638-1	42 -18
A1638-15	38 -13
A1638-2	62 - 3
A1638-30	42 -17
A1639-2	61 - 2
A1639-2	62 - 2
A1639-23	62 -10
A1639-26	38 -14
A1937	62 -30
A2108	62 -21
A2109-3	33 - 8
A2230	62 - 5
A2351	62 -34
A2513-34	38 -12
A30010	42 - 9
A30011	42 -12
A30013	42 -13
A30014	42 -11
A30015	42 -10
A30021	42 -30
A30023	42 -20
A30030	42 -32
A30040	42 -34
A30047	38 -10
A30048	38 - 9
A30078-1	38 - 4
A30078-2	38 - 8
A30079-1	42 - 4
A30079-2	42 - 8
A30085	42 -33
A30087	42 -24
A30087	42 -28
A3124	62 -32
A3125	62 -33
A3150-5	62 -25
A3902	62 -26
A3906	62 - 8
A39070	41 -10
A4001	62 - 6
A4427	62 -36
A4513-1	33 - 6
A6191-8Z-3	19 -10
A6195-8Z3	13 -30
A6195-8Z3	13A-32
A6196-8Z3	13 -30
A6196-8Z3	13A-32
A6204-8Z3	5 - 6
A7512-12	3 -25
A8566-8Z	18 -35
B228	77 - 6
B2345	62 -31
B30024	42 -27
B30026	42 -24
B30026	42 -28
B30027	42 -23
B30076	42 - 5
B30077	38 - 5
B30195	42 -15
B30594	42 -29

PART NUMBER	FIGURE AND INDEX NO.
B3414	62 -24
B3526	62 -19
B3905	62 -27
B3908	62 -11
B3921	62 - 4
B4014	62 -42
B4016	62 -12
B4026	62 -13
B4138	62 -18
B4277-10	62 -38
B4277-12	62 -38
B4277-14	62 -38
B4277-16	62 -38
B4277-18	62 -38
B4277-20	62 -38
B4277-3	62 -38
B4277-4	62 -38
B4277-5	62 -38
B4277-6	62 -38
B4277-7	62 -38
B4277-8	62 -38
B4342	62 -16
B4354	62 -17
B4354-1	62 -17
B4407	62 -37
B4407-1	62 -37
B4407-2	62 -37
B4408	62 -39
B4426	62 -35
B610	10 - 7
B610	83 -32
B610	83 -39
CES1109CLASS1A	50 -19
CES1109CLASS1B	50 -19
CES1109CLASS1C	50 -19
CES1109CLASS1G	50 -19
CES1109CLASS1H	50 -19
CES1109CLASS4	50 -19
CM2692-12P5S	40 - 5
CM2692-12P5S	40A- 5
CM2692-20-1S	11 -13
CM2692-28-15	7 -26
CM2791	70 - 7
CM2791-1	63 -10
CM2791-1	63 -26
CM679-2	93 -34
CR163-4-2	30 -73
CR163-4-2	44 -48
CR163-4-4	6 -20
CR163-4-4	30 -72
CR163-4-4	43 -42
CR163-4-4	43 -56
CR163-4-4	44A-58
CR163-4-4	44A-59
C1-C2	1 - 1
C1-C2	1 - 1
C156001-0104	8 -36
C156001-0106	8 -33
C161009-0104	62 -
C161031-0101	65 -16
C161040-0103	67 -
C163001-0104	41 -
C163003-0102	42 - 2
C163003-0401	38 - 2
C163030-0113	41 -14
C163032-0109	42 -18
C166001-0601	92 -63
C166001-0601	92A-59
C166002-0401	92 -64
C166002-0401	92A-60
C166005-0204	92 -52
C166005-0204	92A-50
C166005-0205	92 -53
C166005-0205	92A-51

PART NUMBER	FIGURE AND INDEX NO.
C166005-0504	92 -53
C166005-0504	92A-51
C166005-0703	92A-54
C166005-0705	92 -58
C166005-0705	92A-57
C166005-0707	92 -55
C166005-0707	92A-53
C166006-0108	92 -32
C166006-0108	92A-29
C166006-0109	92 -30
C166006-0109	92A-27
C166007-0102	92 -71
C166007-0102	92A-65
C166008-0101	92 -39
C166008-0101	92A-33
C166008-0103	92 -44
C166008-0103	92A-38
C166009-0703	92 -56
C166010-0101	92 - 1
C166010-0101	92A- 1
C166010-0102	92 - 1
C166010-0102	92A- 1
C166010-0103	92 - 1
C166010-0103	92A- 1
C17312-3	96 - 4
C17313	96 - 7
C17325	96 - 2
C17326	96 - 5
C17330	96 - 3
C17331-3	96 - 6
C253001-0101	43 -21
C253001-0101	46 - 9
C262001-0202	37 -12
C262001-0202	38 - 1
C262003-0202	37 -12
C262003-0202	38 - 1
C262003-0204	41 -31
C262003-0204	42 - 1
C262023-0101	37 -13
C262023-0101	38 - 2
C262023-0102	41 -32
C262023-0102	42 - 2
C291502-0103	55 -67
C291502-0103	55A-69
C292501-0104	55 -70
C292501-0104	55A-72
C294501-0101	91 -12
C294501-0102	91 -14
C294501-0103	91 -15
C294502-0101	91 -57
C294505-0101	90 - 5
C294505-0102	90 - 6
C299505-0205	55 -65
C299505-0205	55A-67
C299506-0102	55 -64
C299506-0102	55A-66
C30019	42 -18
C30041	42 -19
C30057	38 - 3
C301001-0211	83 -46
C301002-0103	83 -43
C301002-0301	83 -39
C301002-0308	83 -44
C30163-4	42 - 7
C30163-6	42 - 6
C30172	38 - 7
C30172-1	38 - 6
C3411	62 -40
C3418	62 -23
C3903	62 -43
C3910/C203	62 - 1
C4129	62 -14
C421001-0101	58 -48
C421001-0102	58 -49

PART NUMBER	FIGURE AND INDEX NO.
C431003-0102	91 -36
C431003-0301	91 -36
C482001-0202	91 -32
C482001-0401	91 -30
C592001-0103	3 -44
C592001-0103	10 -32
C592001-0103	14 -33
C592001-0103	16 -64
C592001-0201	10 -34
C592001-0201	14 -33A
C592001-0201	16 -68
C593001-0101	93 -34
C594502-0101	96 -18
C610502-0101	82A- 9
C611001-0101	66 -15
C611001-0101	93 -10
C611001-0102	93 -10
C611501-0102	66 -13
C611501-0102	98 - 1
C613001-0201	93 -33
C621001-0106	96 -
C622001-0102	33 - 3
C622001-0104	33 - 7
C622001-0201	3 -23
C622003-0105	2 -33
C622006-0101	3 -27
C622006-0102	3 -28
C622006-0103	3 -29
C622006-0105	3 -30
C622007-0101	93 -36
C660501-0101	60 -15
C661003-0504	55 -31
C661003-0504	55A-33
C661012-0101	55 -41
C661025-0102	55A-43
C661060-0201	55 -32
C661061-0201	55 -33
C661064-0204	55A-34
C661065-0204	55A-35
C661071-0101	55 -41
C661071-0101	55A-43
C661071-0101	86A- 4
C661071-0102	86A- 4
C661071-0102	55 -42
C661071-0102	55A-44
C661075-0101	91 - 3
C661075-0101	55 -39
C661075-0101	55A-41
C661075-0103	91 - 3
C661075-0103	55 -39
C661075-0103	55A-41
C661075-0104	55 -39
C661075-0105	91 - 3
C661075-0105	55 -39
C661075-0105	55A-41
C661075-0106	91 - 3
C661075-0106	55A-41
C661075-0107	55A-41
C661076-0101	55 -38
C661076-0101	91 - 1
C661076-0102	55 -38
C661076-0102	55A-40
C661076-0102	91 - 1
C661076-0103	55 -38
C661076-0103	55A-40
C661076-0103	91 - 1
C661076-0105	55A-40
C661076-0105	91 - 1
C661080-0101	55 -43
C661080-0101	55A-45
C662035-0101	55 -56
C662035-0101	55A-54
C664501-0103	55 -54
C664501-0103	55A-57

PART NUMBER	FIGURE AND INDEX NO.
C664508-0101	55 -30
C664508-0101	55A-32
C668020-0104	55 -57
C668020-0104	55A-59
C668501-0204	64 -50
C668501-0211	55 -52
C668501-0211	55A-55
C668507-0101	58 -21
C668507-0101	72A-47
C668540-0101	55 -40
C668540-0101	55A-42
C668540-0101	91 -28
C669502-0201	55 -44
C669502-0202	55 -44
C669502-0202	55A-46
C7000-632-67	55 -53
C7000-632-67	55A-56
D30259	42 - 3
D366	60 -10
D4023X.375	60 -12
EC1239A-B	1 -10
EC1675A-B	1 -14A
EC776	1 -12
EC880	1 - 2
FCC-20068	8 - 4
FCC-20068	8 - 4
FC6446	41 -27
FDC-2475-50	59 - 6
FTC750J	82A-18
GNB4012	34 - 8
GNB40120H	34 - 8
G440437	55A-48
G441344	55A-47
G442702	55 -47
G442702	55A-49
G442786-63	55 -48
G442786-63	55A-50
G444627	55 -49
G444627	55A-51
G444627	90 - 1
H322-4-1	47 -15
H323-3-1-1	47 -15
H323-4-1-1	47 -15
H559-3-1	47 -15
J2005-2	98 - 6
J9534-20	98 - 4
J9534-20	98 -13
KM610-051	63 -15
KM610-051	63 -21
KM610-64	34 -42
KM610-64	40A-61
LP4-17AM	41 -22
L4858-1	55 -61
L4858-1	55A-63
MC21042L5	83 -16
MIL-P-8585	1 -14
MS100009	67 -17
MS124663	90 -16
MS15002-3	36 -54
MS15584-2	97 - 3
MS16562-16	65 -24
MS16562-16	73 -37
MS16624-1025	88 -14
MS16624-1081	82B-12
MS16624-1137	77 -10
MS16624-1262	40 - 8
MS16624-1262	40A- 8
MS16624-1275	36 -28
MS16625-1075	40 - 3
MS16625-1075	40A- 3
MS16625-143	39 - 1
MS20074-04-3	65 -19
MS20074-05-14	98 -11
MS20200KP4	16 -62

PART NUMBER	FIGURE AND INDEX NO.
MS20220-2	80 -17
MS20220-2	80 -21
MS20220-2	80 -28
MS20220-2	81 -33
MS20220-2	83 -13
MS20230B20	69 -75
MS20230B20	69 -83
MS20253-2-4046	16 -41
MS20253-2-646	57 - 4
MS20253-5-100	65 - 5
MS20253P2	34 -43
MS20253P2-292	40A-62
MS20364-1032	51 -19
MS20364-1032C	40 -13
MS20364-1032C	40A-13
MS20364-1032C	43 -13
MS20364-1032C	44 -13
MS20364-1032C	44A-13
MS20364-1032C	64 -10
MS20364-1032C	64 -13
MS20364-1032C	64 -19
MS20364-1032C	64 -26
MS20364-1032C	84 -20
MS20364-1032C	84 -24
MS20364-428A	42 -22
MS20364-832C	43 -38
MS20365-1032C	64 -24
MS20365-624C	64 - 4
MS20365-720C	3 - 8
MS20365-82C	12 - 8
MS20365-820C	3 - 3
MS20365-820C	12 - 5
MS20365B632C	55 -52
MS20365B632C	55 -53
MS20365B632C	55A-55
MS20365B632C	55A-56
MS20392-1C11	52 -71
MS20392-1C11	52A-80
MS20392-1C11	83 - 3
MS20392-1C11	83 - 8
MS20392-1C15	43 -17
MS20392-1C15	44 -17
MS20392-1C15	44A-17
MS20392-1C17	59 - 3
MS20392-1C21	51 - 1
MS20392-1C21	52 - 1
MS20392-1C21	52 -68
MS20392-1C21	52A- 1
MS20392-1C21	52A-76
MS20392-1C23	51 -38
MS20392-1C33	45 - 2
MS20392-1C37	46 - 2
MS20392-1C9	43 -16
MS20392-1C9	44 -16
MS20392-1C9	44A-16
MS20392-1C9	51 -47
MS20392-2C11	52 - 4
MS20392-2C11	52A- 4
MS20392-2C11	84 -39
MS20392-2C15	75 - 9
MS20392-2C15	75 -21
MS20392-2C19	84 -21
MS20392-2C31	34 - 5
MS20392-2C37	52 -63
MS20392-2C37	52A-71
MS20392-2C43	51 -36
MS20392-2C45	45 - 7
MS20392-2C55	52 -76
MS20392-2C55	52A-85
MS20392-2C63	12 -13
MS20392-2C71	53 -23
MS20392-3C17	52 -14
MS20392-3C17	52A-22
MS20392-3C19	81 -26

PART NUMBER	FIGURE AND INDEX NO.
MS20392-3C25	81 -20
MS20392-3C49	52 -11
MS20392-3C49	52A-19
MS20392-4C13	74 -42
MS20392Z-2C17	52 -52
MS20392Z-2C17	52A-60
MS20426AD10	12 -11
MS20615-4M10	43 -35
MS20615-4M10	44 -32
MS20615-4M10	44A-36
MS20665-132	45 - 3
MS20822-3D	40 -35
MS20822-3D	40A-35
MS20822-3D	42 -35
MS20822-4D	65 -58
MS20822-4D	92 -94B
MS20822-4D	92 -96C
MS20822-6D	91 -17
MS20822-8D	87 -45
MS20823-4D	92A-87A
MS20823-6D	91 -47
MS20823-8D	87 -38
MS20823-8D	87 -40
MS20826-4D	92 -94
MS20826-6D	91 - 8
MS20826-6D	91 -18
MS20826-6D	91 -48
MS20913-1D	87 -27
MS20913-1D	91 - 5
MS20913-1D	92 -95
MS2095-02	88 -21
MS21042L4	10 - 6
MS21042L4	13 - 5
MS21042L4	13A- 5
MS21042L4	14 - 3
MS21042L4	15 - 3
MS21042L4	15 -51
MS21042L4	16 - 3
MS21042L4	16 -61
MS21042L4	32 -35
MS21042L4	32 -39
MS21042L4	36 -12
MS21042L4	37 -11
MS21042L4	41 -25
MS21042L4	51 -55
MS21042L4	52 -96
MS21042L4	53 - 3
MS21042L4	53 -44
MS21042L4	53 -48
MS21042L4	54 - 5
MS21042L4	54 - 9
MS21042L4	54 -18
MS21042L4	64 -36
MS21042L4	64 -39
MS21042L4	77 -32
MS21042L4	77 -58
MS21042L4	80 -36
MS21042L4	80 -43
MS21042L4	81 -13
MS21042L4	81 -17
MS21042L4	81 -32
MS21042L4	81 -41
MS21042L4	81 -46
MS21042L4	83 -32
MS21042L4	83 -39
MS21042L4	85 -14
MS21042L4	85 -20
MS21042L4	85 -24
MS21042L4	88 -28
MS21042L4	88 -33
MS21042L4	93 -48
MS21042L4	99 -21
MS21042L5	6 -16
MS21042L5	13 - 6

PART NUMBER	FIGURE AND INDEX NO.
MS21042L5	13A- 6
MS21042L5	18 -19
MS21042L5	32 - 7
MS21042L5	34 - 2
MS21042L5	34 -22
MS21042L5	36 - 5
MS21042L5	36 - 8
MS21042L5	40 -18
MS21042L5	40 -22
MS21042L5	40A-22
MS21042L5	58 -11
MS21042L5	58 -28
MS21042L5	80 -19
MS21042L5	80 -24
MS21042L5	80 -31
MS21042L5	81 -36
MS21042L6	35 - 5
MS21042L6	40 -25
MS21042L6	40A-25
MS21042L6	77 -22
MS21042L6	83 -42
MS21044A08	92A-36
MS21044D3	24 -47
MS21044D3	24 -48
MS21044N06	20 -17
MS21044N06	20 -22
MS21044N06	32 -31
MS21044N06	55A-57
MS21044N06	72 -27
MS21044N06	78 -27
MS21044N08	8 -32
MS21044N08	15 -41
MS21044N08	16 -67
MS21044N08	18 -10
MS21044N08	18 -41
MS21044N08	18 -41
MS21044N08	21 -22
MS21044N08	52 -88
MS21044N08	82B-16
MS21044N08	86 -37
MS21044N08	96 -20
MS21044N3	4 -28
MS21044N3	4 -37
MS21044N3	4 -38
MS21044N3	10 -10
MS21044N3	11 - 4
MS21044N3	11 -12
MS21044N3	14 -15
MS21044N3	17 -13
MS21044N3	18 -64
MS21044N3	19 - 2
MS21044N3	19 - 9
MS21044N3	24 -46
MS21044N3	24 -48
MS21044N3	26 -11
MS21044N3	26 -38
MS21044N3	26 -79
MS21044N3	32 -18
MS21044N3	34 - 8
MS21044N3	34 -30
MS21044N3	34 -38
MS21044N3	35 -10
MS21044N3	35 -17
MS21044N3	40 -37
MS21044N3	40 -57
MS21044N3	40A-37
MS21044N3	40A-59
MS21044N3	44 - 4
MS21044N3	44A- 4
MS21044N3	46 - 6
MS21044N3	52 - 3
MS21044N3	52A- 3
MS21044N3	53 -20
MS21044N3	53 -30

PART NUMBER	FIGURE AND INDEX NO.
MS21044N3	58 -14
MS21044N3	58 -16
MS21044N3	64 -32
MS21044N3	64 -41
MS21044N3	65 -48
MS21044N3	65 -50
MS21044N3	68 - 4
MS21044N3	68 -11
MS21044N3	70 - 7
MS21044N3	70 -10
MS21044N3	70 -14
MS21044N3	72 -14
MS21044N3	72 -43
MS21044N3	72A- 9
MS21044N3	73 -12
MS21044N3	73 -40
MS21044N3	74 -26
MS21044N3	74 -33
MS21044N3	74 -40
MS21044N3	74 -47
MS21044N3	74 -50
MS21044N3	75 -13
MS21044N3	75 -16
MS21044N3	75 -26
MS21044N3	75 -31
MS21044N3	77 -44
MS21044N3	78 - 6
MS21044N3	78A- 6
MS21044N3	79 -11
MS21044N3	79 -17
MS21044N3	79 -22
MS21044N3	80 - 4
MS21044N3	80 -10
MS21044N3	81 - 7
MS21044N3	82 - 5
MS21044N3	82 -13
MS21044N3	82 -18
MS21044N3	83 -20
MS21044N3	83 -35
MS21044N3	84 -17
MS21044N3	84 -30
MS21044N3	84 -35
MS21044N3	84 -43
MS21044N3	85 -30
MS21044N3	87 -30
MS21044N3	87 -47
MS21044N3	88 -23
MS21044N3	88 -24
MS21044N3	92 -19
MS21044N3	92 -26
MS21044N3	92 -29
MS21044N3	92 -76
MS21044N3	92 -81
MS21044N3	92 -85
MS21044N3	92A-19
MS21044N3	92A-26
MS21044N3	92A-70
MS21044N3	92A-75
MS21044N3	92A-78
MS21044N3	93 -17
MS21044N3	93 -53
MS21044N3	93 -62
MS21045L06	74 -18
MS21045L08	46 -14
MS21045L3	61 - 9
MS21045L3	68A- 4
MS21209F1-20	78 - 3
MS21209F1-20	78A- 3
MS21209F4-20	39 -14
MS21919DG2	64 -43
MS21919DG3	40 -37
MS21919DG3	40A-37
MS21919DG3	73 -13
MS21919DG3	73 -14

PART NUMBER	FIGURE AND INDEX NO.
MS21919DG3	74 -11
MS21919DG3	88 -33
MS21919DG34	64 -25
MS21919DG4	64 -42
MS21919DG4	65 -43
MS21919DG4	74 -14
MS21919DG4	92 -96E
MS21919DG4	92A-95
MS21919DG40	65 -51
MS21919DG6	64 -26
MS21919DG6	80 -51
MS21919DG8	87 -14
MS21919DG9	65 -42
MS21919D6-11	64 -41
MS219219DG-8	87 -11A
MS24462-4	16 -63
MS24663-4	77 -60
MS24665-132	12 -15
MS24665-132	34 - 5
MS24665-132	36 -52
MS24665-132	43 -18
MS24665-132	44 -18
MS24665-132	44A-18
MS24665-132	45 -11
MS24665-132	51 -36
MS24665-132	51 -39
MS24665-132	51 -47
MS24665-132	52 - 6
MS24665-132	52 -52
MS24665-132	52 -65
MS24665-132	52 -69
MS24665-132	52 -78
MS24665-132	52A- 6
MS24665-132	52A-60
MS24665-132	52A-73
MS24665-132	52A-77
MS24665-132	52A-88
MS24665-132	53 -24
MS24665-132	73 -34
MS24665-132	74 -37
MS24665-132	74 -51
MS24665-132	75 - 8
MS24665-132	75 - 9A
MS24665-132	75 -23
MS24665-132	79 -28
MS24665-132	81 -20
MS24665-132	81 -29
MS24665-132	84 -21
MS24665-132	84 -41
MS24665-132	84 -47
MS24665-132	88 -12
MS24665-134	34 -13
MS24665-134	36 -35
MS24665-134	36 -48
MS24665-134	52 -13
MS24665-134	52A-21
MS24665-134	70 -19
MS24665-134	74 -44
MS24665-134	77 -37
MS24665-134	81 -24
MS24665-134	82 -26
MS24665-134	83 - 3
MS24665-134	83 - 8
MS24665-134	83 -49
MS24665-134	85 - 5
MS24665-134	85 -10
MS24665-134	85 -25
MS24665-134	87 -29
MS24665-136	34 -25
MS24665-136	80 -20
MS24665-136	81 -37
MS24665-136	81 -42
MS24665-136	81 -47
MS24665-136	82 -18

PART NUMBER	FIGURE AND INDEX NO.
MS24665-136	84 -31
MS24665-136	85 -21
MS24665-143	85 -31
MS24665-144	82 -31
MS24665-151	46 - 3
MS24665-151	51 - 1
MS24665-151	52 - 1
MS24665-151	52A- 1
MS24665-151	59 - 5
MS24665-24	77 -59
MS24665-24	81 - 5
MS24665-281	74 -43
MS24665-283	83 -21
MS24665-285	75 - 5
MS24665-285	80 -27
MS24665-285	83 -22
MS24665-351	40 -29
MS24665-351	40A-29
MS24665-362	40 -53
MS24665-362	40A-53
MS24665-71	77 -49
MS25171-3S	93 -21
MS25237-330	56 - 2
MS25237-330	56 - 3
MS25237-330	56 - 4
MS25237-330	56 - 5
MS25237-330	56 -11
MS25237-330	56 -15
MS25237-330	56 -16
MS25237-330	56 -17
MS25237-330	56 -18
MS25237-330	56 -26
MS25237-330	95 -10
MS28775-027	39 - 3
MS28775-112	39 - 5
MS28778-3	8 -23
MS28778-3	74 - 4
MS28778-4	65 -60
MS28782-22	39 - 7
MS29513-10	88 -17
MS29513-111	88 - 6
MS29513-12	8 -35
MS29513-138	88 - 7
MS29513-338	8 -34
MS35333-37	14 -33A
MS35333-37	14 -34
MS35489-11	23 -12
MS35489-1185	69 -79
MS35489-13S	92 -96A
MS35489-13S	92A-92B
MS35489-134	97 -11
MS35489-14	8 -18
MS35489-14S	92A-92A
MS35489-15S	69 -55
MS35489-15S	69 -67A
MS35489-17	58 - 6
MS35489-2S	92 -97A
MS35489-2S	92A-92C
MS35489-20	87 -39
MS35489-20S	69 -84
MS35489-23	72A-21
MS35489-4	55B-21
MS35489-4	55B-25
MS35489-4	55B-45
MS35489-4	87 - 4
MS35489-4S	82A-32
MS35489-49	87 -18
MS35489-6	60 - 6
MS35489-6	95 -21
MS35489-6S	18 -78
MS35489-7S	69 -98
MS35489-9S	31 - 3
MS9021-038	66 -18
M34-14	35 -11

PART NUMBER	FIGURE AND INDEX NO.
M451	20 - 6
NAS1022A08	49 -34
NAS1054-6-3	19 -39
NAS1054-8-10	24 - 2
NAS1054-8-10	27 -11
NAS1054-8-11	19 -41
NAS1054-8-12	19 -42
NAS1054-8-12	27 - 7
NAS1054-8-13	19 -43
NAS1054-8-6	27 - 3
NAS1054-8-6	27 - 9
NAS1054-8-8	27 - 6
NAS1054-8-8	27 - 8
NAS1054-8-9	27 -10
NAS1067A08	46 -15
NAS1067A08	69 -54
NAS1067N3	26 -69
NAS1068A08	82A- 7
NAS1068A4	26 -33
NAS1068A4	26 -53
NAS1329A06K-120	14 -33A
NAS1329A06K120	3 -24
NAS1329A06K120	3 -33
NAS1329A06K75	30 -63
NAS1329S3K.080	40 -41
NAS1329S3K.080	40A-41
NAS1329S3K.130	40 -42
NAS1329S3K.130	40A-42
NAS1329S3K.130	40A-42
NAS1329S3K80	43 -42A
NAS1329S3K80	44 -51A
NAS1329S3K80	44A-54
NAS1352-06-6	95 -18
NAS144-20	18 -14
NAS17383B	93 -20
NAS178-8-7	25 - 2
NAS178-8-8	25 - 1
NAS179-6	19 -40
NAS179-8	19 -44
NAS179-8	24 - 2
NAS179-8	27 - 3
NAS179-8	27 -12
NAS220-11	52 -86
NAS220-11	52A-97
NAS220-11	77 -41
NAS220-14	77 -39
NAS220-16	43 -36
NAS220-16	44 -33
NAS220-16	44A-37
NAS220-24	77 -52
NAS220-5	30 -46
NAS220-5	43 - 7
NAS220-5	43 -20
NAS220-5	43 -68
NAS220-5	44 - 7
NAS220-5	44 -20
NAS220-5	44 -54
NAS220-5	44A- 7
NAS220-5	44A-11
NAS220-5	44A-21
NAS220-5	44A-23
NAS220-5	79 - 3
NAS220-6	13 -38
NAS220-6	14 -32
NAS220-6	18 -10
NAS220-6	18 -41
NAS220-6	18 -41
NAS220-6	77 -17
NAS220-8	14 -32
NAS221-1	78A- 5
NAS221-11	78 - 5
NAS221-12	55B-40
NAS221-13	15 -36
NAS221-13	34 - 8

PART NUMBER	FIGURE AND INDEX NO.
NAS221-15	25 -19
NAS221-15	43 -11
NAS221-15	44 -11
NAS221-5	25 -21
NAS221-6	18 -63
NAS221-6	55B-42
NAS221-8	4 -28
NAS221-8	10 -31
NAS221-8	61 - 4
NAS221-9	40 -11
NAS221-9	40A-11
NAS221-9	78 - 3
NAS221-9	78A- 3
NAS222-14	77 -58
NAS222-16	77 -29
NAS222-9	101 - 3
NAS295M4	79 - 5
NAS388-10-7P	43 - 6
NAS388-10-7P	44 - 6
NAS388-10-7P	44A- 6
NAS395-1-3	49 - 6
NAS395-1-3	94 -20
NAS395-10-3	15 -54
NAS395-12-3	57 - 9
NAS395-13-3	11 -30
NAS395-13-3	18 - 7
NAS395-14-3	3 -20
NAS395-14-3	4 -27
NAS395-14-3	15 -46
NAS395-14-3	18 -25
NAS395-14-3	18 -54
NAS395-14-3	26 -21
NAS395-14-3	30 -56
NAS395-14-3	33 - 3
NAS395-14-3	68 - 6
NAS395-14-3	68A- 9
NAS395-14-3	72A-23
NAS395-14-3	72A-25
NAS395-16-3	4 - 4
NAS395-16-3	40 -45
NAS395-16-3	40A-46
NAS395-16-3	40A-46
NAS395-16-3	86 -18
NAS396-4-3	95 -16
NAS397-10	31 -14
NAS397-10	87 -17
NAS397-12	87 -15
NAS397-14	8 -11
NAS397-14	87 - 2
NAS397-18-1	65 -13
NAS397-22	5 - 9
NAS397-32	73 -28
NAS397-8	91 -18
NAS397-8	91 -24
NAS397-8	91 -52
NAS398-42	65 -35
NAS398-42	73 -21
NAS398-50	64 -43
NAS398-50	65 -44
NAS398-50	65 -45
NAS398-50	72 -39
NAS398-50	72A- 5
NAS398-50	73 -16
NAS398-50	73 -18
NAS42HT6-19	55B-40
NAS428H3-6	85 -32
NAS43A12-27	65 -43
NAS43DD0-8A	78A-13
NAS43DD0-8A	78A-29
NAS43DD12-64	55 -64
NAS43DD12-64	55A-66
NAS43DD3-12	45 - 9
NAS43DD3-13	92 -16
NAS43DD3-13	92A-16

PART NUMBER	FIGURE AND INDEX NO.
NAS43DD3-18	52 -76A
NAS43DD3-18	52A-86
NAS43DD3-23	88 -33
NAS43DD3-28	73 -13
NAS43DD3-32	58 -46
NAS43DD3-36	73 -14
NAS43DD3-45	92 -17
NAS43DD3-45	92A-17
NAS43DD3-6	92 -24
NAS43DD3-6	92A-24
NAS43DD3-64	55 -44
NAS43DD3-64	55A-46
NAS43DD3-8	58 -58
NAS43DD3-8	93 -23
NAS43DD3-9	92 -28
NAS43DD4-18	79 -12
NAS43HT3-12	75 -23
NAS43HT3-16	87 -11A
NAS43HT3-45	43 -12
NAS43HT3-45	44 -12
NAS43HT3-45	44A-12
NAS43HT3-9	64 -31
NAS43HT4-10	51 -53
NAS43HT4-12	51 -53
NAS43HT4-12	52 -94
NAS43HT4-12	53 -43
NAS43HT4-12	99 -19
NAS43HT4-16	80 -47
NAS43HT4-16	81 -27
NAS43HT4-16	83 -27
NAS43HT4-22	99 - 7
NAS43HT4-30	99 - 6
NAS43HT4-32	53 -42
NAS43HT4-55	85 -15
NAS43HT4-58	53 -46
NAS43HT4-80	53 -47
NAS435A4-92	64 -42
NAS444-14-3	5 -14
NAS444-4-3	7 -23
NAS446-1-3	47 -28
NAS446-1-3	80 -51
NAS446-1-3	87 -33
NAS446-2	95 -26
NAS446-2-1	55 - 6
NAS446-2-1	55 -28
NAS446-2-1	55A- 7
NAS446-2-1	55A-28
NAS446-2-3	57 -12
NAS446-2-3	57 -14
NAS446-2-3	93 - 8
NAS446-2-3	97 - 5
NAS446-2-3	97 - 9
NAS446-4	92A-91
NAS446-4	92A-92
NAS446-4	92A-97
NAS446-4	95 -23
NAS446-4-1	73 -27
NAS446-4-3	5 - 8
NAS446-4-3	40 -47
NAS446-4-3	64 - 7
NAS446-4-3	64 -42
NAS446-4-3	64 -43
NAS446-4-3	65 -43
NAS446-4-3	69 -73
NAS446-4-3	69 -82
NAS446-4-3	72 - 3
NAS446-4-3	72A-39
NAS446-4-3	74 -11
NAS446-4-3	88 -33
NAS455-163C4-8	10 -19
NAS464-3-22	36 -49
NAS464P3-9	82 -23
NAS464P4A10	99 - 5
NAS464P4A8	99 - 3

PART NUMBER	FIGURE AND INDEX NO.
NAS464P4A8	99 -10
NAS464P5LA30	40 -16
NAS464P5LA30	40A-16
NAS464P6LA32	35 - 2
NAS488-1-3	63 -83
NAS488-10	73 -19
NAS488-5-3	33 - 5
NAS488-5-3	94 -17
NAS514-1032-14	43 -64
NAS514-1032-14	44A-65
NAS514-632R10	77 -21
NAS514P1032-10	55B-41
NAS543-3-34	43 -64
NAS543-3-34	44A-65
NAS557-3A	57 -14
NAS557-4A	23 - 7
NAS557-4A	23 -21
NAS557-6A	23 - 3
NAS557-8A	23 -15
NAS561-1-16	52 -89
NAS561-1-16	52A-78
NAS561-2-12	51 -42
NAS561-3-8	51 -44
NAS561-3-8	79 - 9
NAS561-3-8	79 -27
NAS561-4-6	35 -12
NAS561-5-12	74 -34
NAS561-6-32	77 -63
NAS561C2-8	73 - 8
NAS561C3-10	51 -49
NAS561C3-10	53 -13
NAS561C3-10	53 -15
NAS561P3-8	43 -66
NAS561P3-8	44A-67
NAS561P4-10	52A-37
NAS561P4-10	52A-62
NAS561P4-12	52 -22
NAS561P4-12	52 -29
NAS561P4-12	52 -34
NAS561P4-12	52 -54
NAS561P4-12	52 -56
NAS561P4-12	52A-30
NAS561P4-12	52A-37
NAS561P4-12	52A-42
NAS561P4-12	52A-62
NAS561P4-12	52A-64
NAS561P4-15	52 -37
NAS561P4-15	52A-45
NAS561P4-16	45 -19
NAS561P4-18	39 -13
NAS561P4-8	52 -66
NAS561P4-8	52A-74
NAS561P4-8	82A-13
NAS561P6-12	52 -26
NAS561P6-12	52A-34
NAS561P6-18	52 -49
NAS561P6-18	52A-57
NAS561P6-22	52 -47
NAS561P6-22	52A-55
NAS561P6-28	52 -42
NAS561P6-28	52A-50
NAS561P8-18	52 -43
NAS561P8-18	52 -45
NAS561P8-18	52A-51
NAS561P8-18	52A-53
NAS563-11	39 -15
NAS563-21	64 -26
NAS601-5	55B-24
NAS62D-8	49 -34
NAS620-4	84 -13
NAS620A416L	60 -19
NAS679-A06	95 -20
NAS679A04	47 -26
NAS679A04	100 - 7

PART NUMBER	FIGURE AND INDEX NO.
NAS679A06	55 -54
NAS679A06	93 -35
NAS679A08	18 -10
NAS679A08	51 - 9
NAS679A08	52 -74
NAS679A08	52A-83
NAS679A08	52A-99
NAS679A08	53 -21
NAS679A08	77 -18
NAS679A08	77 -25
NAS679A08	77 -42
NAS679A08	77 -53
NAS679A08	77 -64
NAS679A08	79 - 8
NAS679A08	80 -50
NAS679A08	83 - 9
NAS679A08	86 -39
NAS679A08	87 -11A
NAS679A08	92 -42
NAS679A08	95 -23
NAS679A08K	54 -19
NAS679A3	43 - 4
NAS679A5	40A-18
NAS679A5	98 - 7
NAS680A06	13 -11
NAS680A06	13A-14
NAS680A06K	40 -43
NAS680A06K	40A-44
NAS680A08	14 - 9
NAS680A08	18 -44
NAS680A08	22 - 4
NAS680A08	22 -18
NAS680A08	24 -15
NAS680A08	40A-54
NAS680A08	46 -20
NAS680A08	55B-18
NAS680A08	69 -27
NAS680A08	69 -45
NAS680A08	69 -53
NAS680A08	69 -60
NAS680A08	69 -62
NAS680A08	69 -67
NAS680A08	96 -12
NAS680A08K	14 - 9A
NAS680A08K	26 -60
NAS680A08K	26 -62
NAS680A08K	30 -54
NAS680A3	11 -20
NAS680A3	16 -29
NAS680A3	19 -21
NAS680A3	19 -23
NAS680A3	19 -31
NAS680A3	22 -33
NAS680A3	25 -11
NAS680A3	32 -12
NAS680A3	40 -55
NAS680A3	58 -56
NAS680A3	63 -62
NAS680A3	69 - 8
NAS680A3	69 -11
NAS680A3	69 -15
NAS680A3	69 -43
NAS680A3	69 -58
NAS680A3	71 - 4
NAS680A3	82A- 5
NAS680A3K	40 -63
NAS680A3K	40A-70
NAS680A3K	82A-36
NAS680A3K	82A-41
NAS680A4	24 -40
NAS680A4	24 -42
NAS680A4	25 -23
NAS680A4	26 -31
NAS680A4	31 - 2

PART NUMBER	FIGURE AND INDEX NO.
NAS680C08M	18 -28
NAS681A08	69 -67B
NAS681A08	69 -77
NAS682A08	43 -46
NAS682A08	44 -26
NAS682A08	44A-29
NAS682A08	69 -27
NAS682A08	69 -60
NAS682A3	30 -17
NAS682A3	45 -15
NAS682A3	55B-33
NAS682A3	69 -11
NAS682A3	69 -43
NAS682A3	69 -46
NAS682A3	69 -62A
NAS682A3K	82A-37
NAS682A3K	82A-42
NAS683A08	69 -70
NAS683A08	69 -77
NAS683A08	69 -85
NAS684A08	69 -22
NAS684A08	77 -33
NAS684A3	55B- 6
NAS684A3	69 -11
NAS684A3	69 -58
NAS686A08	4 -24
NAS686A08	30 -53
NAS686A08	54 -22
NAS686A08K	13A-21
NAS686A08K	13A-35
NAS686A3	19 -11
NAS686A3	21 - 4
NAS686A3	21 - 6
NAS686A3	25 -15
NAS686A3	40 -62
NAS686A3	40A-71
NAS686A3	69 -88
NAS686A3	69 -91
NAS686A3K	93 -37
NAS687A3	26 -66
NAS696A06LK	20 -15
NAS696A06LK	73 -32
NAS696A08	5 -31
NAS696A08	18 -65
NAS696A08	18 -79
NAS696A08	24 -26
NAS696A08	24 -63
NAS696A08	43 -45
NAS696A08	44 -25
NAS696A08	44 -28
NAS696A08	44A-28
NAS696A08	44A-31
NAS696A08	46 -27
NAS696A08	55B-43
NAS696A08	69 -36
NAS696A08	72A-25
NAS696A08	77 -15
NAS696A08	92 -11
NAS696A08	92A-11
NAS696A08K	13 -10
NAS696A08K	13A-11
NAS696A08K	14 -27
NAS696A08K	22 -32
NAS696A08K	30 -55
NAS696A08K	44A-49
NAS696A3	15 -35
NAS696A3	32 - 4
NAS696A3	58 -57
NAS696A3	101 -13
NAS696A3K	24 -49
NAS696A4	26 -83
NAS696A4	26 -88
NAS697A06L	22 -30
NAS697A06L	55B- 7

PART NUMBER	FIGURE AND INDEX NO.
NAS697A06L	55B- 9
NAS697A06L	55B-20
NAS697A08	4 -11
NAS697A08	14 - 9
NAS697A08	18 -36
NAS697A08	18 -80
NAS697A08	20 - 2
NAS697A08	24 -24
NAS697A08	24 -26
NAS697A08	24 -39
NAS697A08	24 -63
NAS697A08	30 -43
NAS697A08	32 - 2
NAS697A08	32 -40
NAS697A08	43 - 7
NAS697A08	43 -20
NAS697A08	43 -30
NAS697A08	44 - 7
NAS697A08	44 -20
NAS697A08	44 -27
NAS697A08	44 -35
NAS697A08	44A- 7
NAS697A08	44A-21
NAS697A08	44A-23
NAS697A08	44A-30
NAS697A08	44A-39
NAS697A08	55 -20A
NAS697A08	55B-15
NAS697A08	55B-19
NAS697A08	55B-27
NAS697A08	55B-29
NAS697A08	55B-35
NAS697A08	55B-44
NAS697A08	63 -59
NAS697A08	63 -66
NAS697A08	77 -15
NAS697A08	92 - 7
NAS697A08	92 -11
NAS697A08	92A- 7
NAS697A08	92A-11
NAS697A08K	13 -10
NAS697A08K	13A-10
NAS697A08K	14 -28
NAS697A08K	22 -34
NAS697A08K	40 -45
NAS697A08K	40A-48
NAS697A3	15 -35
NAS697A3	26 - 9
NAS697A3	43 -42A
NAS697A3	44 -51B
NAS697A3	44A-54
NAS697A3	55A-31
NAS697A3	55B-38
NAS697A3	58 -53
NAS697A3	101 - 9
NAS697A3	101 -13
NAS697A3K	24 -39
NAS697A3K	24 -42
NAS697A4	32 -20
NAS697A4K	22 -31
NAS697A4K	24 -49
NAS698A06L	82A- 8
NAS698A08	30 -44
NAS698A08	45 -23
NAS698A08K	13 -11
NAS698A08K	13A-13
NAS698A08K	14 -29
NAS698A08K	30 -55
NAS698A3	26 - 9
NAS698A3	45 -14
NAS698A3	79 -23
NAS70-177-500	84 -46
NAS737RM30	8 -15A
NAS75-3-016	84 - 5

S1021A6	92A-28A
S1021A6-6	55 -11
S1021A6-6	55A-13
S1021A6-8	72A-28
S1021A6-8	100 -11
S1021A8-6	77 -27
S1021A8-6	93 - 1
S1021ZA4-6	53 -38
S1021Z10-10	65 -43
S1021Z10-10	72A-13
S1021Z10-10	72A-17
S1021Z10-6	80 -51
S1021Z10-6	89 -14
S1021Z10-6	92 -50
S1021Z10-6	92 -94A
S1021Z10-6	92A-48
S1021Z10-8	65 -51
S1021Z10-8	73 -19
S1021Z10-8	92A-47
S1021Z10-8	92A-91
S1021Z10-8	92A-97

S1021Z8-6	30 -58
S1021Z8-6	40 -45
S1021Z8-6	40A-46
S1021Z8-6	40A-46
S1021Z8-6	64 - 7
S1021Z8-6	64 -41
S1021Z8-6	64 -42
S1021Z8-6	64 -43
S1021Z8-6	65 -43
S1021Z8-6	69 -72
S1021Z8-6	69 -81
S1021Z8-6	72 - 4
S1021Z8-6	72A-40
S1021Z8-6	73 -27
S1021Z8-6	74 -11
S1021Z8-6	88 -33
S1021Z8-6	92 -98B
S1021Z8-6	95 -23
S1021Z8-6	100 - 2
S1021Z8-8	3 -17
S1021Z8-8	3 -42

S1023Z8-8B	49 -36
S1026BG	1 -18
S1029-1	1 -58
S1047-1	1 -20
S1047-2	1 -20
S1048-2	30 -56
S1050-1	1 -48
S1050-1	24 -11
S1050-2	1 -48
S1050-3	1 -48
S1052-1	83 -10
S1053E10T	1 -19
S1053E10T	72 -20
S1053E10T	72A-11
S1053E12T	1 -19
S1053E16T	73 -26
S1053E20T	1 -19
S1053E24T	1 -19
S1053E24T	65 -45
S1053E24T	72 -38
S1053E24T	72A- 4

PART NUMBER	FIGURE AND INDEX NO.
S1053E24T	73 -15
S1053E28T	1 -19
S1053E32T	1 -19
S1053E7T	1 -19
S1053E8T	1 -19
S1053E8T	72 -17
S1053E8T	72A-16
S1053K10T	1 -19
S1053K12T	1 -19
S1053K20T	1 -19
S1053K20T	65 -34
S1053K20T	73 -20
S1053K24T	1 -19
S1053K24T	65 -44
S1053K24T	73 -17
S1053K24W	1 -19
S1053K28W	1 -19
S1053K32T	1 -19
S1055-1	1 -21
S1055-1	24 -21
S1055-1	97 -10
S1066C1	47 - 6
S1067C1	47 - 2
S1071-1	1 -22
S1071-1	4 - 3
S1071-1	86 - 4
S1071-1	86 - 6
S1071-1	86 - 7
S1071-1	86 - 8
S1071-1	86 -16
S1071-1	86 -31
S1071-1	86 -32
S1071-1	86 -42
S1071-1	86 -43
S1071-1	86 -44
S1071-1	86 -45
S1071-1	86 -46
S1071-1	86A- 6
S1071-1	86A- 7
S1071-1	86A- 8
S1071-1	86A- 9
S1071-1	86A-10
S1071-1	86A-11
S1071-1	86 - 5
S1071-1	86 - 5
S1071-3	1 -22
S1071-4	1 -22
S1071-5	1 -22
S1074-1	58 - 4
S1078-1	1 - 7
S1078-1	3 -37
S1078-2	1 - 8
S1078-3	1 - 9
S1080-1	20 -11
S1080-4	77 -14
S1084-1	1 -23
S1090-2	93 -64
S1090-22	93 -63
S1091-1	93 -63
S1091-5	93 -64
S1093-1	11 -32
S1095-1	23 -17
S1095-2	23 - 4
S1095-3	23 - 1
S1095-4	23 -13
S1104-3	64 -15
S1106-3	11 - 5
S1106-4	64 -33
S11065-21	36 -21
S1110ET	1 -24
S1110ET	73 -23
S1115-19	93 -14
S1115-29	63 -56
S1115-30	93 -12

PART NUMBER	FIGURE AND INDEX NO.
S1115-9	93 -12
S1116	1 -43
S1116-1	43 -48
S1116-1	44 -45
S1117-24	40 -28
S1117-24	40A-28
S1130-1	86 -11
S1130-1	86 -19
S1130-1	86 -33
S1130-1	86 -47
S1130-1	86A-14
S1131-1	4 - 2
S1131-1	86 -11
S1131-1	86 -19
S1131-1	86 -33
S1131-1	86 -48
S1131-1	86A-14
S1132-1	86 -17
S1133-1	86 - 9
S1133-1	86A-15
S1133-2	86 -24
S1135-1	86 -34
S1135-1	86A- 5
S1137-1	86 -41
S1138-1	86 -12
S1138-1	86 -34
S1138-1	86A- 5
S1138-1	86A-13
S1139-1	86 -10
S1139-1	86A-12
S1153-3	92 -51
S1155-2	92 -98A
S1155-2	92A-91
S1155-2	92A-97
S1155-3	92 -48
S1155-3	92 -50
S1155-3	92A-46
S1155-3	92A-48
S1155-3	92A-49
S1155-4	92 -94A
S1155-4	92 -98C
S1155-4	92A-46
S1155-4	92A-91
S1155-4	92A-92
S1155-4	92A-96
S1166-1	29 -16
S1167-4-0388	90 - 2
S1167-4-0460	65 -38
S1167-8-0120	87 -45
S1194-1-17	46 -19
S1196-1	79 -19
S1209-1	26 -51
S1209-1	26 -60
S1216-3	60 -18
S1230-10	55 -66
S1230-10	55A-68
S1234-5	55 -63
S1234-5	55A-65
S1241-36	55 -59
S1241-36	55A-61
S1241-37	55 -60
S1241-37	55A-62
S1241-37	73 - 9
S1244-3	70 - 1
S1244-4	70 - 2
S1249-2	79 -18
S1258-1	86 -13
S1268-14	55 -58
S1268-14	55A-60
S1283-1	92A-45
S1291-8	4 -49
S1291-8	5 - 5
S1291-8	5 -32
S1311-3	55 -53

PART NUMBER	FIGURE AND INDEX NO.
S1311-3	55A-56
S1346-1	1 -25
S1356	1 -44
S1357-3	58 -44
S1358-1	77 - 9
S1359-7	46 -16
S1360-10L	55 -74
S1360-10L	55A-77
S1360-15L	55 -76
S1360-15L	55A-78
S1360-20L	55 -77
S1360-20L	55A-79
S1360-5L	55 -75
S1360-5L	55A-76
S1360-60	55 -78
S1362-23	48 -12
S1362-25-1	48 -12
S1362-25-10	48 -12
S1362-25-11	48 -12
S1362-25-2	48 -12
S1362-25-3	48 -12
S1362-25-4	48 -12
S1362-25-5	48 -12
S1362-25-6	48 -12
S1362-25-7	48 -12
S1362-25-8	48 -12
S1362-25-9	48 -12
S1366-1	1 -26
S1366-2	1 -26
S1366-3	1 -26
S1372-1	55 -50
S1372-1	55A-52
S1372-1	65 -45
S1372-1	65 -45
S1372-2	65 -45
S1378-1	1 -27
S1378-2	1 -27
S1389-1	1 -28
S1389-1	29 - 7
S1389-10	3 -37
S1389-2	1 -28
S1389-2	28 - 2
S1389-2	28 - 4
S1389-3	1 -28
S1389-4	1 -28
S1389-5	1 -28
S1389-6	1 -28
S1389-7	1 -28
S1389-7	28 - 3
S1397-4	2 -13
S1398-1	1 -29
S1398-1	92 -46
S1398-1	92A-43
S1398-2	1 -30
S1398-2	92 -47
S1398-2	92A-44
S1413-1	55 -31
S1413-2	55 -31
S1413-2	55A-33
S1415-1	1 -31
S1426-1	59 - 2
S1438-2	75 - 7
S1438-2	75 -23
S1441-1	1 -32
S1441-1	46 -32
S1441-2	1 -32
S1441-2	43 -47
S1441-2	44A-51
S1441-2	72 -14B
S1441-2	72A-49
S1441-2	44 -44
S1441-3	1 -32
S1450-1A8-032	72A-29
S1450-3-10-032	64 -17

PART NUMBER	FIGURE AND INDEX NO.
S1450-3A8-032	55 -26
S1450-3A8-032	55A-25
S1450-3D9-032	40 -61
S1450-3D9-032	40A-69
S1450-4-10-064	53 - 7
S1450-4A11-063	60 - 3
S1450-5-12-035	34 -20
S1450-5-14-063	58 -31
S1450-5A24-040	72 -13
S1450-5A24-040	72A-46
S1450-5H14-040	98 -12
S1450-5H14-063	98 - 3
S1450-6-14-080	98 -10
S1483-1	44A-66
S1483-2	43 -65
S1485D16U	72A-17
S1485D17U	72 -18
S1485D20U	65 -51
S1485D20U	72A-13
S1486DG3U	64 -41
S1486DG4	92 -98B
S1486DG4L	74 -18
S1486DG4U	74 -14
S1486DG5U	64 -22
S1486DG5U	64 -24
S1486DG8U	8 -16
S1486DG8U	8 -16
S1486DG8U	87 - 3
S1494-16	91 -34
S1494-6	91 -43
S1494-9	91 -39
S1495-10	1 -33
S1495-3	1 -33
S1495-3	40 -38
S1495-3	40A-38
S1495-4	1 -33
S1495-4	91 -22
S1495-4	91 -22
S1495-4	91 -25
S1495-4	91 -49
S1495-4	91 -50
S1495-6	1 -33
S1495-6	31 -13
S1495-6	87 -15
S1495-6	91 - 7
S1495-6	91 -10
S1495-6	91 -11
S1495-6	91 -19
S1495-6	91 -41
S1495-6	91 -42
S1495-6	91 -45
S1495-6	91 -45
S1495-6	91 -46
S1495-6	91 -46
S1495-6	91 -60
S1495-6	91 -64
S1495-6	91 -65
S1495-8	1 -33
S1495-8	8 -13
S1495-8	87 - 2
S1495-8	87 -17
S1497-4	91 -21
S1497-4	91 -26
S1497-4	91 -54
S1497-6	91 - 9
S1497-6	91 -44
S1511-1	1 -51
S1517-2	88 -19
S1520-1	92 -43
S1520-1	92A-37
S1550-1	63 -23
S1550-1	63 -42
S1573-3	88 - 4
S1579-2	93 -51

PART NUMBER	FIGURE AND INDEX NO.
S1588-1	8 -28
S1596-60	55A-80
S1597-1-30.8	98 -14
S1597-1-3018	66 -14
S1605-2	55 -57
S1605-2	55A-59
S1611-1	1 -34
S1614	1 -45
S1628-027	39 - 4
S1628-112	39 - 6
S1628-329	36 -22
S1635-1	1 -35
S1635-2	1 -35
S1635-3	1 -35
S1636-1	1 -36
S1636-2	1 -36
S1636-3	1 -36
S1637-1	1 -37
S1637-1	96 -14
S1637-2	1 -38
S1637-2	96 -14
S1638-1	1 -39
S1638-1	96 - 8
S1638-2	1 -40
S1638-2	96 -13
S1640-12	1 -41
S1640-15	1 -41
S1640-6	1 -41
S1640-9	1 -41
S1641-12	1 -42
S1641-15	1 -42
S1641-6	1 -42
S1641-6	93 -43
S1641-9	1 -42
S1648-06K75	10 -32
S1648-06K75	14 -33A
S1648-06K75	14 -33A
S1660-1	93 -24
S1674-1	75 -27
S1675-1	75 -29
S1693	72 -21
S1693-1	78 -23
S1693-1	84 -50
S1693-2	72 -19
S1693-2	78 -24
S1693-2	87 -14
S1693-2	91 -61
S1693-2	93 -26
S1693-2	93 -59
S1693-3	82A-18
S1693-3	91 -58
S1693-6	40 -39
S1693-6	40A-39
S1695-2	55 -29
S1695-2	55A-29
S1702-1	18 -56
S1704-1	52 -79
S1704-1	52A-89
S1710-1	74 -39
S1711-1	65 -56
S1713-1	2 -16
S1714-1	2 -17
S1721-12	92 -37
S1721-12	92A-40
S1722	92 -97
S1722-125	92A-90
S1723-5	92 -39
S1723-5	92A-42
S1724-1	92 -38
S1724-1	92A-41
S1726-1	43 -62
S1726-1	44A-62
S1727-1	43 -62
S1727-1	44A-62

PART NUMBER	FIGURE AND INDEX NO.
S1728-1	72 -28
S1741-1	18 -44
S1741-1	30 -63
S1742-1	18 -69
S1746AA1	53 -41
S1746AA5	54 -14
S1746BB1	53 -41
S1746BB5	54 -14
S1746B1	53 -41
S1746B1	53 -41
S1746B5	54 -14
S1746B5	54 -14
S1746CC1	53 -41
S1746CC1	53 -41
S1746CC5	54 -14
S1746CC5	54 -14
S1746DD1	53 -41
S1746DD5	54 -14
S1746EE1	53 -41
S1746EE5	54 -14
S1746FF1	53 -41
S1746FF5	54 -14
S1746GG1	53 -41
S1746GG5	54 -14
S1746HH1	53 -41
S1746HH5	54 -14
S1746T1	53 -41
S1746T5	54 -14
S1762-1	49 - 4
S1771-3	84 -18
S1776-5	18 -50
S1780-8	72 -15
S1807-1	93 -26
S1807-1	93 -58
S1809-1	59 - 6
S1819-3	10 -11
S1827-1	36 -15
S1831-1	93 - 1
S1831-1	93 - 2
S1834-1	72 - 9
S1834-1	72A-45
S1853-1	63 -63
S1853-4	65 -32
S1860-2A	5 - 6
S1860-2A	7 -17
S1860-2A	7 -19
S1862-1	19 -30
S1862-1	30 -59
S1862-1	40 -69
S1862-2	22 -21
S1862-2	23 -14
S1862-2	69 -50
S1862-2	69 -65
S1862-2A	5 - 6
S1862-2A	15 -44
S1862-3	69 -51
S1862-3	69 -65
S1863-1	40A-76
S1863-2	19 -29
S1863-2	25 - 6
S1863-2	40 -70
S1863-2	40A-75
S1863-3	5 - 3
S1863-3	22 -20
S1863-3	23 - 6
S1863-3	23 -14
S1863-3	25 - 5
S1863-3A	15 -43
S1863-3A	22 -35
S1863-3A	23 - 2
S1863-3A	23 -10
S1863-3A	23 -19
S1876-1	93 - 1
S1878-1	26 -56

PART NUMBER	FIGURE AND INDEX NO.
S1878-1	30 -64
S1878-1	30 -66
S1878-1	30 -66A
S1891-10	8 - 9
S1891-10	8 -19
S1891-10	87 -16
S1891-10	87 -17
S1891-20	72A-12
S1893-1	93 - 1
S1894-1	55 -50
S1894-1	55A-52
S1894-3	55 -50
S1894-3	55A-52
S1895-1	57 -13
S1898-2	47 - 8
S1899-1G	56 - 2
S1899-1G	56 - 3
S1899-1G	56 -11
S1899-1G	56 -16
S1899-1G	56 -26
S1899-16	56 -15
S1899-2G	56 - 4
S1899-2G	56 - 5
S1899-2G	56 -17
S1899-2G	56 -18
S1899-5	95 - 8
S1899-6	95 - 9
S1901-1	94 - 6
S1904-3	55 -68
S1904-3	55A-70
S1906-1	84 -11
S1910-2	94 - 3
S1914-8	51 - 7
S1914-8	51 -34
S1914-8	52 -82
S1914-8	52A-92
S1917-1	93 -44
S1929-1	22 -19
S1929-1	70 -22
S1931-8	46 -18
S1938-3	15 -58
S1941-1	55 -50
S1941-1	55A-52
S1948-2	72A-50
S1948-2-1	1 -47
S1948-2-1	48 -11
S1948-2-1	47 -12
S1948-2-10	1 -47
S1948-2-11	1 -47
S1948-2-12	1 -47
S1948-2-13	1 -47
S1948-2-2	1 -47
S1948-2-3	1 -47
S1948-2-4	1 -47
S1948-2-5	1 -47
S1948-2-6	1 -47
S1948-2-7	1 -47
S1948-2-8	1 -47
S1948-2-9	1 -47
S1950-1E	49 -14
S1953-1	92 -21
S1953-1	92A-21
S1953-3	92 -20
S1953-3	92A-20
S1957-2	49 -21
S1960-1-0	78A-33
S1962-1-0	78A-32
S1963-2	91 -53
S1964-3	65 -62
S1974-1	55 -67
S1974-1	55A-69
S1980-1	55 -68
S1980-1	55A-70
S1981-5	86 -38

PART NUMBER	FIGURE AND INDEX NO.
S1982-1	55 -61
S1982-1	55A-63
S1985-1	78 -15
S1985-1	78A-15
S1991-1	93 - 9
S1994-1-1	55 -71
S1994-1-1	55A-73
S1995-4	55 -69
S1995-4	55A-71
S2000B270J	55A-70
S2013-2	52 -35
S2013-2	52A-43
S2013-2	52A-68
S2013L2	52 -60
S2014-2	52 -35
S2014-2	52 -60
S2014-2	52A-43
S2014-2	52A-68
S202RB	1 -16
S202RB	3 -43
S202R0265B	69 -31
S202R0330B	69 -18
S202R0420B	69 -19
S202R0485B	69 -32
S202R0630B	69 -23
S202R0710B	69 -37
S202R0715B	69 -21A
S202R0747B	69 -34
S202R1750B	15 -55
S202VW	1 -16
S2024-1	72 - 8
S2024-1	72A-44
S2030-1	78A-16A
S2034-1	31 - 4
S2034-1	31 - 5
S2037-1	92 - 3
S2037-1	92A- 3
S2071-1	86 -40
S2074-1	99 - 2
S2074-1	99 - 4
S2076-1	99 -11
S2077-5	57 - 6
S2077-5	93 - 7
S2083-1	84 -42
S2091-1	55 -69
S2091-1	55A-71
S2092-1	49 -32
S2092-1	49 -33
S2092-1	49 -34
S2092-10	78 -31
S2092-10	78A-40
S2092-2	49 -32
S2092-2	49 -33
S2092-2	49 -34
S2092-3	1 -49
S2092-3	47 -18
S2092-3	78 -32
S2092-3	78A-41
S2092-4	1 -50
S2092-6	47 -18
S2093-1	78 -20
S2106-1	9 - 1
S2107-1	9 - 2
S2108-1	1 -57
S2108-1	43 -49
S2108-1	44A-53
S2108-2	1 -57
S2108-3	1 -57
S2108-4	1 -57
S2135-1	55 -51
S2135-1	55A-53
S2145-1	1 -56
S2155-1	22 -12
S2160-1	55 -73

PART NUMBER	FIGURE AND INDEX NO.
S2160-1	55A-75
S2160-1	86 -29
S2160-2	55 -72
S2160-2	55A-74
S2161-1	55 -73
S2161-1	55A-75
S2178-3-0074	74 - 2
S2178C3-0083	74 - 1
S2191-8-4	34 -33
S2195-2	1 -52
S2195-2	101 -14
S2199-3	101 - 1
S2199-4	101 - 2
S2202-3	84 -45
S2209-1	92A-91A
S2209-2	72A-15
S2209-2	72A-20
S2209-2	78A-26
S2209-2	91 -66
S2209-3	73 -24
S2234-2	55A-37
S2249-1	1 -54
S2249-1	44A-52
S2249-1	46 -21
S225-1	3 -16
S225-1	3 -17
S225-1	18 -26
S225-1	26 -21
S225-1	26 -55
S225-1	30 -64
S225-1	30 -66
S225-2	3 -12
S225-3	11 -28
S225-3	18 -52
S225-5	30 -57
S225-7	26 -57
S225-7	30 -66A
S226-2	5 -14
S226-2	5 -19
S226-2	7 -23
S226-3	26 -21
S2275AA103	99 -17
S2275AA103	51 -51
S2275AA103	52 -92
S2275AA107	53 -41
S2275AA201	99 - 1
S2275BB103	99 -17
S2275BB103	51 -51
S2275BB103	52 -92
S2275BB107	53 -41
S2275BB201	99 - 1
S2275B103	51 -51
S2275B103	99 -17
S2275B103	99 -17
S2275B103	51 -51
S2275B103	52 -92
S2275B107	53 -41
S2275B107	53 -41
S2275B201	99 - 1
S2275B201	99 - 1
S2275CC103	51 -51
S2275CC103	99 -17
S2275CC103	99 -17
S2275CC103	51 -51
S2275CC103	52 -92
S2275CC107	53 -41
S2275CC107	53 -41
S2275CC201	99 - 1
S2275CC201	99 - 1
S2275DD103	99 -17
S2275DD103	51 -51
S2275DD103	52 -92
S2275DD107	53 -41
S2275EE103	51 -51

PART NUMBER	FIGURE AND INDEX NO.
S2275EE103	99 -17
S2275EE201	99 - 1
S2275FF103	51 -51
S2275FF103	99 -17
S2275FF107	53 -41
S2275FF201	99 - 1
S2275GG103	51 -51
S2275GG103	99 -17
S2275GG107	53 -41
S2275GG107	53 -41
S2275GG201	99 - 1
S2275HH103	51 -51
S2275HH103	99 -17
S2275HH107	53 -41
S2275HH201	99 - 1
S2275T103	99 -17
S2275T103	51 -51
S2275T103	52 -92
S2275T107	53 -41
S2275T201	99 - 1
S2275T201	99 - 1
S237-2	7 -21
S237-2	7 -22
S237-4	11 -27
S244-16	63 -31
S290D1032	72 -11
S290D832	3 -36
S290D832	3 -39
S292-1	1 -17
S292-11	1 -17
S292-12	1 -17
S292-14	1 -17
S292-14	87 -11B
S292-14	92 -96
S292-16	1 -17
S292-2	1 -17
S292-28	1 -17
S292-3	1 -17
S292-4	1 -17
S292-5	1 -17
S292-6	1 -17
S292-8	1 -17
S351	64 -29
S352	23 - 8
S354-1	23 -11
S354-3	87 -40
S354-5	23 -20
S378-1	82 -14
S378-1	84 -27
S378-1	84 -32
S378-1L	74 -48
S378-1L	82 -15
S378-2	82 -28
S378-2	83 -17
S378-3L	81 -43
S378-3L	85 -17
S378-4	80 -33
S378-4	81 -38
S378-4	85 -11
S378-4	85 -22
S394	80 -44
S394	83 -23
S500-1	83 -49
S51-10	1 -15
S51-10	91 -33
S51-12	1 -15
S51-12	65 -12
S51-16	1 -15
S51-32	1 -15
S51-4	1 -15
S51-6	1 -15
S51-8	1 -15
S51-8-10	87 -14
TRA2233	77 - 7

PART NUMBER	FIGURE AND INDEX NO.
VAL5-6000	55A-71
V3L-3-D9	83 -45
WL98293-3-.360	65 -31
X26263	93 -66
Y8562	1 -53
Y8562	12 -22
ZF604	92 -70
ZF604	92A-64
ZH716	92 -54
ZH716	92 -59
ZH716	92A-52
ZH727-8	92 -55
ZH727-8	92A-53
Z651-1	92 -34
Z651-1	92A-31
Z651-13	92 -31
Z651-3	92 -33
Z651-3	92A-28
Z651-3	92A-30
Z736	92 -58
Z736	92A-56
0-470-R	65 - 1
0-470-R	65 - 1
0-470-S ◪	65 - 1
0-470-S ◪	65 - 1
0310295	82B- 4
0310296	82B- 3
0310297-1	82B- 5
0310298-1	82B- 6
0310332	82B-17
0310362-5	82B- 9
0310422-1	82B-13
0311319-1	46 -26
0311319-2	46 -26
0311623-1	46 -30
0311623-1	49 -40
0312155-10	93 -18
0320105	8 -24
0322526-7	8 -20
0400213-6	2 -18
0405027-12	2 - 1
0405027-13	2 - 2
0405038-1	2 -62
0405038-2	2 -62
0411129	19 - 6
0411174-3	24 -16
0411185-11	43 -55
0411185-11	44A-57
0411307	75 -15
0411320	20 - 6
0411420	79 - 6
0411523	82 -10
0411524	82 -11
0411549	75 -10
0411550	75 -11
0411562	75 -25
0411563	75 -24
0411564	75 -18
0411573-1	75 -25
0411680	24 -34
0411778-2	75 - 8
0411778-2	75 -23
0411783	74 -40
0411851	43 -22
0412007-1	93 -54
0412467	24 -45
0412467	26 -12
0412467	26 -92
0412467	32 -25
0413163-18	72 - 7
0413163-18	72A-43
0413163-203	72 - 3
0413163-204	72 - 3
0413163-27	72 - 5

PART NUMBER	FIGURE AND INDEX NO.
0413163-27	72A-41
0413163-28	72 - 5
0413163-28	72A-41
0413163-45	72 - 3
0413163-45	72A-39
0413163-46	72 - 3
0413163-46	72A-39
0413163-7	72 - 6
0413163-7	72A-42
0413228	72 -12
0413247	8 -30
0413307-13	31 -10
0413517-1	60 - 6
0413517-15	60 -13
0413517-3	60 - 8
0413517-5	60 - 9
0414014-1	24 -17
0414014-2	24 -18
0415010-1	99 -12
0415010-1	99 -13
0415023-4 ◪	49 -14
0422229-11	6 -22
0422229-12	25 -14
0422229-13	25 -14
0422280	80 - 3
0422280	80 - 9
0422291	5 - 4
0422344	32 - 5
0431017-2	96 -11
0432126	82 -20
0432134-1	79 -25
0432138-6	82 - 8
0432138-7	82 - 9
0441139-5	40 -26
0441139-5	40A-26
0441139-6	40 -26
0441139-6	40A-26
0442506-11	36 -39
0442506-12	36 -29
0442506-2	36 -42
0442506-9	36 -41
0450191-1	64 -23
0450277-2	69 -97
0450277-3	69 -96
0450286-1	18 -59
0450311	73 -38
0450311-3	88 -25
0450311-4	64 -39
0450311-5	64 -11
0450311-5	72 -41
0450311-5	72A- 7
0450311-5	73 -10
0450311-5	92 -23
0450311-5	92A-23
0450314	5 - 8
0450314	72 - 1
0450314	72A-37
0500106-173	89 - 7
0500228-2	58 -25
0500228-3	58 -32
0500228-5	58 -30
0500312-2	60 - 1
0500313-1	60 - 2
0501019-1	58 -23
0501022-1	58 -42
0505003-2	2 -61
0505003-3	2 -60
0505009-3	2 -28
0505052-3	2 -38
0505052-4	2 -39
0505052-5	2 -40
0505055-1	2 -45
0510105-113	80 - 7
0510105-13	80 - 7

PART NUMBER		FIGURE AND INDEX NO.
0510105-177		85 - 1
0510105-178		85 - 2
0510105-187		82 - 6
0510105-189		81 - 2
0510105-190		81 - 1
0510105-191		83 - 2
0510105-192		83 - 7
0510105-193		83 - 1
0510105-194		83 - 6
0510105-198		82 - 7
0510105-201		82 - 1
0510105-202		82 - 2
0510105-228		80 - 1
0510105-231		84 -36
0510105-233		74 -38
0510105-301		82 - 1
0510105-302		82 - 2
0510105-328		80 - 1
0510105-77		85 - 1
0510105-78		85 - 2
0510105-87		82 - 6
0510105-89		81 - 2
0510105-90		81 - 1
0510105-91		83 - 2
0510105-92		83 - 7
0510105-93		83 - 1
0510105-94		83 - 6
0510105-98		82 - 7
0510111-11		81 -30
0510146-3		32 -36
0510146-8		32 -32
0510205-5		17 -13
0510205-5		51 -56
0510205-5		52 -97
0510205-5		99 -22
0510205-6		17 -12
0510205-6		51 -56
0510205-6		52 -97
0510205-6		99 -22
0510205-7		51 -56
0510205-7		99 -22
0510205-8		51 -56
0510205-8		99 -22
0511062-15		3 -20
0511062-4		3 -20
0511797-2		24 -20
0512006-1		8 -14
0512123		3 - 7
0512123-1		3 - 6
0512136		80 -49
0512136		83 -28
0512137		25 -10
0512138		80 -48
0512138		83 -25
0512160-2		24 -46
0512167-10		31 - 7
0512167-17		31 - 8
0512167-27		31 - 9
0512167-29		31 - 6
0512167-30		31 - 5
0513052-17		55 -61
0513052-17		55A-63
0513208-1		97 - 7
0513208-3		95 -17
0513420-3		72 -24
0513425-1		49 -12
0513448-1		91 -62
0514017-3	□	52 -18
0514026-2		52 -40
0514026-2		52A-48
0514026-4		52 -50
0514026-4		52A-58
0514027-21		52 -61
0514027-21		52A-69

PART NUMBER		FIGURE AND INDEX NO.
0514028-5		52 -44
0514028-5		52A-52
0514028-6		52 -43
0514028-6		52A-51
0514029-2		52 - 3
0514029-2		52A- 3
0514030-4		52 -21
0514030-4		52A-29
0514032-1		52 -51
0514032-1		52A-59
0514033-1		52 -30
0514033-1		52A-38
0514033-2		52 -57
0514033-2		52A-65
0514034-1		52 -41
0514034-1		52A-49
0514035-17		52 -38
0514035-17		52A-46
0514035-18		52 -39
0514035-18		52A-47
0514036-1		52 -28
0514036-1		52A-36
0514042-1		54 - 1
0514043-2		51 -49
0514051-1		52A-45
0514051-1		52 -37
0514051-2		52A-45
0514051-2		52 -37
0514052-1		51 -35
0514058-1	□	51 -18
0514060-5		52 -27
0514060-5		52A-35
0514064-1		47 - 9
0514066-1		51 -37
0514067-3		47 - 8
0514075-2		51 -17
0514076-1	□	51 -13
0514083-1	□	52 - 8
0514089-1		52 -36
0514089-1		52A-44
0514090-4		52 -75
0514090-4		52A-84
0514099-1		51 -14C
0514099-1		52A-11
0514099-2		51 -14D
0514099-2		52A-12
0514099-3		51 -14B
0514099-3		52A-10
0514100-1		51 -14A
0514100-1	#	52A- 9
0514101-1		52 -17
0514101-1		52A-25
0514101-2		52 -17
0514101-2		52A-25
0514102-1	#	52A-13
0514102-7		51 -14E
0514110-1		51 -14J
0514110-1		52A-18
0514110-1		53 -38A
0514112-2	□	51 -14G
0514121-1		52A-61
0514121-2		52A-36
0515002-10		54 -13
0515002-9		54 -11
0515010-5		99 -14
0515010-6		99 -15
0517003-2		45 - 1
0517021-1		43 -13
0517021-1		44 -13
0517021-1		44A-13
0517021-4		43 -14
0517021-4		44 -14
0517021-4		44A-14
0517021-5		43 -15

PART NUMBER	FIGURE AND INDEX NO.
0517021-5	44 -15
0517021-5	44A-15
0520005-3	3 -37
0522629	10 - 3
0522629-1	80 -42
0522629-1	83 -31
0522629-1	83 -39
0523003-40	7 -13
0523005-50	6 -28
0523005-51	6 -28
0523215	6 -34
0523215-1	6 -34
0523216	6 -33
0523218	10 - 8
0523219-2	4 -39
0523219-3	4 -39
0523219-6	4 -39
0523219-7	4 -39
0523221	10 - 4
0523222	10 - 5
0523222	80 -41
0523230	4 -32
0523230-1	4 -32
0523230-4	4 -32
0523230-5	4 -32
0523232-2	4 -26
0523233-20	4 -29
0523233-3	4 -31
0523233-6	4 -29
0523233-7	4 -30
0523306	6 -13
0523307-2	12 - 3
0523309	6 - 2
0523309-1	6 - 2
0523315	6 - 7
0523315-1	6 - 7
0523321	80 -40
0523400-111	6 -21
0523400-112	6 -21
0523400-20	6 -26
0523400-21	6 -26
0523400-96	6 -27
0523400-97	6 -27
0523406-2	6 -28
0523406-3	6 -28
0523407	4 -38
0523407-1	4 -37
0523409-1	6 -24
0523409-2	6 -25
0523510-25	4 -17
0523510-26	4 -17
0523511-4	4 -33
0523511-6	4 -19
0523512-4	4 -34
0523536-1	83 -31
0523536-1	83 -39
0523537	11 - 1
0523537	83 -33
0523541-43	7 - 2
0523541-44	7 - 2
0523541-45	7 - 3
0523541-45	7 - 6
0523541-46	7 - 3
0523541-46	7 - 6
0523541-47	7 - 4
0523541-48	7 - 7
0523541-49	7 - 8
0523541-50	7 - 8
0523541-51	7 - 2
0523541-52	7 - 2
0523541-53	7 - 3
0523541-53	7 - 6
0523541-54	7 - 3
0523541-54	7 - 6

PART NUMBER	FIGURE AND INDEX NO.
0523541-55	7 - 7
0523541-56	7 - 4
0523541-57	7 - 8
0523541-58	7 - 8
0523541-59	7 - 4
0523541-60	7 - 7
0523614-1	12 - 9
0523615-1	12 -12
0523616-1	12 -14
0523800-10	10 -24
0523800-11	10 -24
0523800-12	10 -25
0523800-13	10 -25
0523800-24	10 -12
0523800-25	10 -12
0523800-6	10 -22
0523800-7	10 -22
0523800-8	10 -23
0523800-9	10 -23
0523806	10 -13
0523806-1	10 -13
0523807	10 -30
0523808	10 -14
0523808-2	10 -14
0523809	10 -15
0523809-1	10 -15
0523810	10 -16
0523811	10 -17
0523811-1	10 -17
0523813-1	10 -26
0523813-2	6 -30
0523813-3	6 -29
0523813-4	6 -31
0523813-5	6 -32
0523813-6	10 -28
0523813-7	10 -29
0523813-8	10 -27
0523814-8	10 -20
0523901-10	11 -31
0523901-13	11 -17
0523901-14	11 -18
0523901-17	11 -22
0523901-18	11 -22
0523901-19	11 -24
0523901-20	11 -24
0523901-21	11 -23
0523901-22	11 -23
0523901-33	11 - 6
0523901-34	11 - 6
0523911-2	11 -14
0523911-3	11 -14
0523912	11 -21
0523912-1	11 -15
0523914-2	11 -19
0523918	11 -25
0523919	11 -10
0523920	11 - 9
0523921	11 - 8
0523923	11 -16
0541115-2	58 - 7
0541115-3	58 - 5
0541115-4	58 - 8
0541124-1	40 -19
0541124-1	40A-19
0541138-16	75 - 6
0541138-3	76 -
0541138-5	76 - 3
0541139	76 - 1
0541140	76 - 2
0541143	76 - 5
0541144	76 - 6
0541148	76 -11
0541148-1	76 - 9
0541149	76 -12

PART NUMBER	FIGURE AND INDEX NO.
0541151	76 -13
0541157-1	40 -26
0541157-1	40A-26
0541157-2	40 -26
0541157-2	40A-26
0541157-3	40 -26
0541157-3	40A-26
0541184-1	76 -10
0541203-14	40 -49
0541203-15	40 -49
0541205-1	40 -56
0541205-2	34 -28
0541206-1	40 -54
0541207-1	40 -55
0541207-2	34 -27
0541207-3	34 -39
0541221-1	40A-56
0541221-2	34 -35
0541222-1	40A-55
0541222-5	34 -40
0541223-11	34 -43
0541223-11	40A-62
0541223-12	34 -43
0541223-12	40A-62
0541223-13	34 -41
0541223-13	40A-60
0541223-15	34 -43
0541223-15	40A-62
0541223-22	40A-49
0541223-23	40A-49
0543001	34 -15
0543003	34 -17
0543013-1	18 -13
0543029	36 -26
0543032-3	2 -32
0543032-3	36 -55
0543037-1	34 -16
0543047-1	36 -31
0543047-1	36 -44
0543048-1	36 -32
0543048-1	36 -45
0543065-1	34 -18
0543079-7	34 -34
0550100-14	64 -22
0550100-6	40 -36
0550100-6	40A-36
0550100-9	64 -24
0550153-1	64 - 6
0550209-1	65 -37
0700099-104	87 -13
0700099-105	87 -12
0700099-106	87 -13A
0700099-107	87 -12A
0700099-15	87 -22
0700099-16	87 -23
0700099-2	87 -42
0700099-21	87 -20
0700099-3	87 -43
0700099-34	87 -39
0700099-37	90 - 4
0700099-45	65 -14
0700099-46	87 - 8
0700099-47	87 - 9
0700099-78	64 -43
0700099-79	64 -44
0700099-80	64 -45
0700099-81	87 -44
0700099-82	89 -16
0700099-83	89 - 7
0700099-84	55 -56
0700099-85	87 - 5
0700099-86	74 -13
0700099-88	74 -15
0700099-89	74 -16

PART NUMBER		FIGURE AND INDEX NO.
0700099-90		74 -19
0700099-92		40 -33
0700099-92		40A-33
0700099-93		40 -33
0700099-93		40A-33
0700099-94		87 -18
0700099-97		87 -46
0700099-98		74 -10
0700099-99		74 - 9
0700103-131		47 - 4
0700108-1		24 -62
0700108-2		24 -62
0700122-12		58 -18
0700122-13		58 -17
0700162-1		55 -36
0700162-1		55A-38
0700162-3		55 -34
0700162-3		55A-36
0700162-4		55 -34
0700162-4		55A-36
0700162-6		55 -34
0700162-6		55A-36
0700162-7		55 -34
0700162-7		55A-36
0700164-6		59 - 1
0700189-9		55 -35
0700612-2		58 -12
0700612-3		58 -15
0700628-5		95 - 6
0700633-5		52 -46
0700633-5		52A-54
0700653-2		47 - 3A
0700668-13		49 -15
0700668-14		49 -16
0700678-33		53 - 9
0700678-34		53 - 9
0700685-3		43 -26
0700685-3		48 - 8
0700685-4		44A-68
0700688-1		26 -46
0700692-1		5 - 9
0700696-1		92 -79
0700696-1		92A-73
0700696-2		92 -74
0700696-2		92A-68
0700702-21	□	47 -13
0700702-5	□	49 -26
0700704-1		19 -33
0700705-3		29 -10
0700705-4		29 -11
0700707-11		47 -22
0700707-5		47 -27
0700707-6		47 -24
0700707-8		47 -26
0700730-1		92 -97B
0700730-2		92 -98
0700761-6		95 -27
0700762-21		50 - 4
0700762-22		50 - 6
0700762-23		50 - 7
0700762-26		47 - 1
0700762-27		47 - 2
0700762-4		50 - 3
0700762-5		50 - 2
0700762-6		50 - 1
0700762-9		50 - 5
0701017-200		24 -13
0701028-2		86 -39
0701036-2		93 -19
0701072-1		101 -15
0701073-1		101 - 4
0701073-2		101 - 5
0701074-1		101 -10
0701074-10		101 -11

PART NUMBER	FIGURE AND INDEX NO.
0701075-1	101 - 8
0701076-1	101 -19
0701076-2	101 -21
0701076-3	101 -17
0701079-1 □	101 -22
0705020-1	2 -31
0705021-2	2 -19
0705022-1	2 -29
0705023-8	2 -20
0705023-9	2 -21
0705024-4	2 -24
0705025-1	2 -30
0705028-1	78 -29
0705028-1	78A-37
0705028-2	2 -26
0705035-1	2 - 9
0705036-2	2 -27
0705038-1	2 - 3
0705038-2	2 - 4
0705039-1	2 - 5
0705039-2	2 - 6
0705039-3	2 - 7
0705039-4	2 - 8
0705042-1 □	48 - 3
0705042-2 □	48 - 3
0705047-1	2 -48
0705047-2	2 -49
0705047-3	2 -50
0705047-4	2 -51
0705047-5	2 -52
0705047-6	2 -53
0705048-25	2 -14
0705048-26	2 -15
0705048-4	87 -31
0705048-5	87 -31
0705051-1	2 -43
0705055-4	2 -55
0705055-5	2 -56
0705055-6	2 -57
0705057-1	2 -58
0705057-2	2 -59
0705182-3	2 -44
0710013-4	72 -23
0710014-12	72 -26
0710014-15	72 -25
0710014-8	72 -32
0710015-13	72 -30
0710015-6	72 -34
0710036-1	26 - 2
0710036-2	26 - 3
0710312-2	53 -12
0710601-29	24 - 8
0710601-30	24 - 9
0710602-1	24 - 3
0710602-2	24 - 4
0710603-3	24 - 7
0710603-4	24 - 7
0710605-200	24 -12
0710606-10	26 - 3
0710606-15	26 - 2
0710606-16	26 - 3
0710606-9	26 - 2
0710608-1	27 -18
0710609-11	26 -61
0710609-7	26 -61
0710609-9	26 -59
0710610-6	26 - 7
0710610-7	26 - 6
0710611-3	27 -19
0710611-4	27 -17
0710612-5	26 - 4
0710612-6	26 - 4
0710612-7	26 - 4
0710612-8	26 - 4

PART NUMBER	FIGURE AND INDEX NO.
0710613-1	26 - 8
0710614-5	26 -17
0710615-1	27 -15
0710615-2	27 -16
0710616-1	27 -13
0710616-2	27 -14
0710629-1	24 -10
0710629-2	24 -10
0710633-1	26 -63
0710634-1	26 -62
0710638-1	17 -14
0710638-1	44 -52
0710656-1	26 - 9
0710656-2	26 - 9
0710657-1	26 - 9
0710657-2	26 - 9
0710658-2	26 -65
0710661-1	26 -72
0710661-3	26 -73
0710662-1	26 -86
0710662-2	26 -87
0710662-3	26 -82
0710663-1	26 -76
0710663-2	26 -77
0710664-1	26 -74
0710664-2	26 -75
0710700-10	26 -70
0710700-11	26 -70
0710700-2	26 -20
0710700-200	27 -
0710700-3	26 -70
0710700-4	26 -
0710700-4	26 -70
0710700-5	26 - 5
0710701-1	27 -19
0710701-2	27 -20
0710701-3	27 -21
0710701-4	27 -22
0710701-5	27 -23
0710701-6	27 -24
0710701-7	27 -24
0710702-1	26 -13
0710702-2	26 -14
0710703-1	26 -15
0710703-2	26 -16
0710703-3	26 -18
0710703-4	26 -19
0710704-1	26 -22
0710704-2	26 -22
0710705-1	26 - 1
0711021-1	43 -29
0711021-1	44A-49
0711021-4	43 -58
0711021-4	44A-55
0711021-9	43 -57
0711021-9	44A-50
0711033-1	43 -23
0711034-1	43 -44
0711034-1	44 -23
0711034-1	44A-26
0711037-14	44 -39
0711037-14	44A-43
0711037-15	43 -51
0711037-16	44 -40
0711037-16	44A-44
0711037-17	43 -50
0711037-18	44 -41
0711037-18	44A-45
0711037-19	43 -53
0711037-20	44 -42
0711037-20	44A-46
0711037-21	43 -52
0711038-1	43 -54
0711038-1	44 -43

PART NUMBER	FIGURE AND INDEX NO.
0711038-1	44A-47
0711050-15	44A-61
0711050-17	43 -59
0711050-18	43 -60
0711050-28	44A-59
0711050-33	44A-60
0711050-5	44A-63
0711051-15	43 -61
0711051-5	43 -62A
0711064-5	43 -45
0711064-5	44 -25
0711064-5	44A-28
0711066-2	19 -12
0711066-6	19 - 1
0711083-1	54 -15
0711083-1	58 - 4
0711111-1	46 -10
0711604-11	25 - 8
0711604-12	25 - 8
0711604-215	25 -
0711604-216	25 -
0711604-48	25 -15
0711604-49	25 -15
0711604-52	25 -24
0711604-53	25 -24
0711605-201	25 - 9
0711605-202	25 - 9
0711605-213	25 - 3
0711605-214	25 - 4
0711606-5	25 -13
0711606-6	25 -13
0711608-11	26 -49
0711608-12	26 -50
0711608-14	26 -47
0711608-4	26 -48
0711610-1	24 -60
0711610-2	24 -60
0711611-2	26 -34
0711613-5	26 -29
0711613-6	26 -30
0711614-7	26 -27
0711614-9	26 -28
0711615-1	24 -61
0711615-1	29 -12
0711615-2	24 -61
0711615-2	29 -12
0711618-3	24 -54
0711618-3	46 -22
0711618-4	24 -53
0711618-4	46 -23
0711620-1	26 -45
0711620-1	46 -25
0711628-1	24 -56
0711628-1	46 -28
0711628-2	24 -57
0711628-2	46 -29
0711632-7	26 -52
0711642-2	26 -66
0711643-1	46 - 4
0711647-1	26 -35
0711651-1	46 -27
0711665-1	25 - 7
0711665-2	25 - 7
0711667-1	51 - 5
0711667-1	53 -29
0711668-1	51 - 4
0711668-1	53 -27
0711671-3	24 -58
0711671-4	24 -59
0711673-1	24 -55
0711673-1	46 -24
0711674-3	26 -36
0711676-3	24 -39
0711676-6	24 -41

PART NUMBER		FIGURE AND INDEX NO.
0711676-7		24 -39
0711677-1		24 -29
0711677-2		24 -30
0711677-3		101 -18
0711677-4		101 -20
0711678-3		24 -31
0711678-4		24 -32
0711678-5		101 -16
0711678-6		101 -16
0711679-3		24 -35
0711680-1		29 -13
0711680-2		29 -14
0711680-3		29 -10
0711680-4		29 -11
0711680-5		29 -15
0711681-1		24 -36
0711681-1		29 - 4
0711681-3		29 - 2
0711681-4		29 - 3
0711682-3		47 -14
0711683-1		24 -25
0711684-1		24 -33
0711684-3		101 -16
0711685-1		17 -10
0711685-2		17 -11
0711688-11		26 -23
0711688-12		26 -24
0711688-13		26 -39
0711688-14		26 -40
0711688-17		26 -25
0711688-18		26 -26
0711688-7		26 -41
0711688-8		26 -42
0711690-5		26 -67
0711690-6		26 -67
0711694-11		25 -16
0711694-12		25 -16
0711694-15		25 -16
0711694-16		25 -16
0711695-10		25 -17
0711695-11		25 -20
0711695-12		25 -20
0711695-9		25 -18
0711701-1		24 -65
0711705-1		46 -17
0711709-1		46 -18
0711775-1		54 -19
0711776-1		24 -64
0711776-2		24 -64
0711777-1		95 -15
0711778-5	□	95 - 1
0711778-7	□	95 - 1
0711779-1	□	93 - 1
0711780-3		95 -22
0711781-1		24 -22
0711781-1		95 -11
0711781-2		24 -23
0711781-2		95 -12
0711784-1		95 - 4
0711788-1		45 - 4
0711790-1		46 -11
0711790-2		46 -13
0711791-1		46 - 1
0711793-1		24 -40
0711793-2		24 -42
0711793-5		24 -40
0711793-6		24 -42
0711800-10		29 - 1
0711800-11		29 - 8
0711800-12		29 - 9
0711800-16		26 -43
0711800-3		26 -44
0711800-4		26 -43
0711800-5		24 -51

PART NUMBER	FIGURE AND INDEX NO.
0711800-6	24 -52
0711800-7	17 - 8
0711800-7	29 -17
0711800-8	17 - 9
0711800-8	29 -18
0711800-9	24 -28
0711804-1	49 -42
0711804-2	49 -42
0711804-3	49 -43
0711804-4	49 -43
0711804-5	49 -44
0711828-1	72A-24
0711828-2	72A-25
0711829-1	72A-22
0711829-2	72A-23
0711830-1	72A-18
0711830-2	72A-19
0711848-1	72A-35
0711848-2	72A-36
0712031-2	93 -60
0712306-5	32 -28
0712503-3	30 -14
0712503-4	30 -15
0712503-5	30 -16
0712503-6	30 -13
0712504-10	30 -52
0712504-3	30 -51
0712504-4	30 -49
0712504-5	30 -50
0712504-6	30 -50
0712504-7	30 -48
0712505-3	24 -44
0712506-1	30 -60
0712507-1	30 -61
0712507-2	30 -62
0712508-1	92 -77
0712508-1	92A-71
0712509-1	30 -69
0712510-1	30 -67
0712511-2	30 -11
0712511-4	30 -11
0712511-5	30 -12
0712512-1	30 -16A
0712512-2	30 -16B
0712513-1	31 - 1
0712513-4	31 - 5
0712514-1	30 -65
0712515-1	30 -70
0712516-1	30 -12
0712517-1	30 -17
0712517-2	30 -17
0712519-1	30 -76
0712519-2	30 -77
0712520-1	30 -74
0712520-2	30 -75
0712521-1	32 -23
0712522-1	32 -12
0712522-3	32 -12
0712523-1	32 - 1
0712524-1	32 -10
0712524-2	32 -10
0712525-2	32 -
0712525-3	32 -11
0712526-1	32 -13
0712526-2	32 -14
0712527-1	30 -47
0712528-1	32 - 3
0712530-1	30 -79
0712605-201	93 -50
0712607-6	30 -71
0712607-8	30 -42
0712607-9	30 -45
0712609-7	30 - 9
0712610-2	30 - 5

PART NUMBER	FIGURE AND INDEX NO.
0712610-3	30 - 5
0712610-4	30 - 5
0712610-5	30 - 6
0712611-2	30 - 4
0712611-3	30 - 4
0712611-4	30 - 4
0712612-2	30 - 2
0712612-3	30 - 2
0712612-4	30 - 2
0712612-6	30 - 3
0712612-7	30 - 3
0712612-8	30 - 3
0712613-2	30 - 7
0712613-3	30 - 8
0712615-3	32 -15
0712618-3	32 - 9
0712618-4	32 - 9
0712619-2	32 - 8
0712621-7	32 -26
0712621-8	32 -27
0712625-4	24 -43
0712626-4	30 -63
0712627-1	30 -38
0712627-10	30 -31
0712627-11	30 -28
0712627-12	30 -29
0712627-13	30 -26
0712627-14	30 -27
0712627-2	30 -39
0712627-21	30 -40
0712627-22	30 -41
0712627-24	30 -18
0712627-25	30 -32
0712627-26	30 -33
0712627-3	30 -36
0712627-4	30 -37
0712627-5	30 -34
0712627-6	30 -35
0712627-9	30 -30
0712636-1	32 -24
0712637-2	24 -48
0712638-2	26 -10
0712638-3	24 -47
0712638-3	26 -89
0712639-1	24 -48
0712639-3	26 -11
0712639-4	26 -90
0712640-3	26 -37
0712640-4	26 -38
0712646-2	30 -19
0712647-3	30 -24
0712647-4	30 -25
0712648-1	24 -37
0712648-2	24 -38
0712650-1	32 -29
0712651-1	29 - 5
0712651-2	29 - 6
0712653-1	30 -20
0712653-2	30 -21
0712653-3	30 -22
0712653-4	30 -23
0712654-1	24 -50
0712654-2	24 -50
0712665-1	26 -54
0712665-2	26 -54
0712748-1	58 -33
0712748-2	58 -34
0712749-1	58 -36
0712750-1	58 -35
0712750-2	58 -35
0712751-1	58 -37
0712752-1	58 -37
0712753-1	30 -10
0712753-1	92 -87

PART NUMBER	FIGURE AND INDEX NO.
0712753-1	92A-80
0712753-2	30 -10
0712753-2	92 -87
0712753-2	92A-80
0712754-1	92 -86
0712754-1	92A-79
0712754-2	92 -86
0712754-2	92A-79
0712755-1	92 -82
0712755-1	92A-76
0712755-2	92 -83
0712755-2	92A-76
0712756-1	92 -88
0712756-1	92A-81
0712756-2	92 -88
0712756-2	92A-81
0712757-1	24 -49
0712757-2	24 -49
0712757-5	24 -49
0712759-5	26 -32
0713003-74	23 -16
0713011-12	58 -19
0713019-24	73 -36
0713019-86	47 - 3
0713032-1	79 - 4
0713032-2	79 - 4
0713047	2 -10
0713047	17 -13
0713070-15	74 -31
0713070-19	74 -46
0713070-20	74 -54
0713070-24	74 -53
0713070-25	74 -29
0713070-32	74 -30
0713070-6	74 -36
0713070-9	74 -45
0713074-1	51 - 1
0713074-1	52 - 1
0713074-1	52A- 1
0713135	72 -35
0713135	72A- 1
0713135-2	18 -58
0713139	72 -36
0713139	72A- 2
0713139-1	18 -57
0713140-1	18 -58
0713140-1	72 -37
0713140-1	72A- 3
0713169-1	55 -23A
0713250-1	72 -31
0713253-1	47 - 5
0713262-2	77 -15
0713262-4	77 -15
0713263-1	18 -30
0713263-2	18 -31
0713263-5	18 -30
0713263-6	18 -32
0713266-3	55B- 2
0713267-1	55B-30
0713272-1	74 -11
0713272-1	74 -14
0713287-11	28 - 1
0713288-3	18 -70
0713288-4	18 -70
0713290-1	21 -19
0713290-2	21 -19
0713296-1	18 -47
0713307-1	70 - 8
0713307-2	70 - 9
0713307-2	84 -48
0713314-1	79 -20
0713315-6	79 -13
0713325-1	55 -23
0713326-1	55B-26

PART NUMBER		FIGURE AND INDEX NO.
0713326-3		55B-26
0713330-3		55 - 6
0713330-3		55A- 7
0713334-10		18 -
0713334-11		18 -
0713334-2		28 - 1
0713334-3		18 -48
0713334-4		18 -49
0713334-5		18 -51
0713334-6		18 -43
0713334-7		18 -60
0713334-8		18 -61
0713335-1		18 -75
0713336-1		55B-34
0713337-1		55 - 9
0713337-1		55A-10
0713338-1		55B-37
0713338-3		55B-37
0713480-1		55B-17
0713480-3		55B-17
0713481-3		55B-39
0713481-5		55B-39
0713482-1		18 -42
0713482-1		55B- 1
0713482-2		18 -42
0713482-2		55B- 1
0713483-5	□	55 -14
0713483-6	□	56 - 1
0713484-1	□	55 - 2
0713484-10	□	56 -24
0713484-11	□	55A- 2
0713484-12	□	56 -25
0713484-2	□	56 - 9
0713484-5	□	55 - 3
0713484-6	□	56 -10
0713484-9	□	55A- 1
0713487-1		94 -11
0713487-10	□	94 -14
0713487-11	□	94 -13
0713487-12	□	94 -15
0713487-14	□	94 -15
0713487-15		94 -10
0713487-3		94 - 9
0713487-5		94 -12
0713487-7		94 - 8
0713487-9	□	94 -15
0713488-1	□	55A-16
0713488-2	□	56 -14
0713511-1		93 - 8
0713525-15		55 -11
0713525-19		55A-13
0713533-1		91 -59
0713534-1	□	47 -30
0713535-1		47 -31
0713536-1		72 -14A
0713536-1		72A-48
0713538-1		28 - 1
0713603-1		18 -12
0713603-2		18 -12
0713604-11		19 -13
0713604-12		19 -13
0713604-15		19 -
0713604-5		19 -14
0713604-6		19 -15
0713604-7		13 -29
0713604-7		19 -16
0713604-8		13 -30
0713604-8		19 -17
0713605-1		19 -37
0713606-1		19 -27
0713606-2		19 -27
0713607-1		19 -25
0713607-2		19 -25
0713608-3		19 -34

PART NUMBER	FIGURE AND INDEX NO.
0713609-5	19 -28
0713609-5	28 - 7
0713609-6	19 -28
0713609-6	28 - 7
0713610-10	19 -35
0713610-9	19 -35
0713611-1	19 -26
0713611-2	19 -26
0713612-1	19 -18
0713612-2	19 -19
0713613-5	19 -36
0713613-6	19 -36
0713614-1	18 -20
0713614-2	18 -20
0713615-1	18 -22
0713615-2	18 -22
0713617-1	18 -21
0713619-1	18 -24
0713619-2	18 -24
0713624-2	21 - 4
0713624-2	75 -14
0713625-1	74 -52
0713626-1	18 -51
0713628-1	21 - 3
0713628-2	21 - 3
0713629-1	75 -20
0713629-2	75 -19
0713631-1	21 - 1
0713631-2	21 - 2
0713632-5	18 - 8
0713632-6	18 - 8
0713633-1	19 -22
0713633-2	19 -22
0713634-2	21 -10
0713634-3	21 -13
0713636-1	21 - 8
0713637-1	21 - 7
0713638-1	18 - 9
0713638-2	18 - 9
0713639-1	18 -29
0713639-2	18 -29
0713640-12	79 -11
0713640-202	20 -
0713640-3	20 - 1
0713640-4	20 - 3
0713641-1	20 - 5
0713641-3	20 - 7
0713642-1	79 - 2
0713642-3	79 - 4
0713643-1	79 - 7
0713643-3	79 - 8
0713644-1	20 -18
0713645-2	20 -16
0713647-1	20 - 8
0713647-2	20 -14
0713647-3	20 -10
0713647-3	20 -14
0713647-3	20 -22
0713651-1	20 -17
0713653-1	79 - 8
0713653-2	79 -10
0713656-1	79 -24
0713656-3	79 -26
0713657-1	20 -12
0713661-1	18 -55
0713663-1	18 -10
0713663-2	18 -10
0713666-1	18 -37
0713668-4	18 -25
0713669-1	21 -11
0713669-2	21 -12
0713670-1	18 -28
0713671-3	21 -16
0713671-4	21 -17

PART NUMBER		FIGURE AND INDEX NO.
0713676-1		18 - 6
0713676-2		18 - 5
0713677-3		21 - 5
0713678-1		21 - 9
0713681-1		21 -18
0713682-1		18 -11
0713682-2		18 -11
0713683-1		19 -38
0713684-2		18 -33
0713685-1		18 -23
0713685-2		18 -23
0713693-2		74 -24
0713693-3		74 -35
0713693-4		74 -35
0713694-1		21 -14
0713694-2		21 -15
0713700-1		22 -25
0713701-2		70 -16
0713702-1		26 - 9
0713702-1		26 -91
0713703-1		49 -34
0713703-2		49 -35
0713715-1		49 -33
0713715-2		49 -34
0713719-1		73 -22
0713719-2		73 -22
0713732-5		19 -32
0713732-6		19 -32
0713734-1		20 -21
0713738-3		57 - 7
0713757-1		18 -67
0713757-2		22 -24
0713770-11		55B-11
0713775-1		55B- 3
0713776-1		55B-13
0713778-9		57 -10
0713779-1		55B-14
0713783-3		55B-32
0713785-1		57 - 3
0713787-4		18 -34
0713787-5		18 -34
0713788-3		28 - 5
0713809-1		55B-15
0713811-5	¤	100 - 1
0713811-7	¤	100 - 1
0713817-4		60 -17
0713822-1		28 - 6
0713847-11		18 -46
0713854-1		55 -78
0713854-1		55A-80
0713854-2		55 -78
0713854-2		55A-80
0713854-4		55 -78
0713854-4		55A-80
0713864-1		55B-16
0713881-15	¤	57 - 1
0713935-2		18 -44
0713943-1		18 -72
0713944-1		18 -73
0713944-1		80 - 6A
0713945-11		58 -54
0713946-1		58 -51
0713951-3		24 -19
0713951-4		24 -19
0713952-1		18 -66
0713952-1		73 -29
0713955-1		55 -12
0713955-1		55A-14
0713959-1		74 -41
0713960-1		77 -16
0713972-1	¤	100 -10
0713972-4		100 - 9
0713975-1		20 - 4
0713993-1		55A-23

PART NUMBER		FIGURE AND INDEX NO.
0713993-5		55A-26
0714002-7		47 - 6
0714002-8		47 - 6
0714003-1		47 - 7
0714003-2		47 - 7A
0714005-1		54 -
0714005-3	#	54 -10
0714005-4	#	54 -12
0714006-1	¤	48 - 7
0714006-2	¤	48 - 7
0714010-1	¤	52 -19
0714010-1	¤	52A-27
0714010-2	¤	52 -19
0714010-2	¤	52A-27
0714012-1	#	51 -
0714012-200	#	51 -15
0714012-201	#	51 - 1
0714012-4	#	51 -16
0714012-5	#	51 -10
0714012-8		51 -11
0714013-1		53 -
0714013-12	#	53 - 8
0714013-2	#	53 -24
0714013-3	#	53 -24
0714013-4	#	53 -
0714013-5	#	53 -33
0714013-6	#	53 -34
0714013-7		53 -35
0714013-8		53 -35
0714013-9	#	53 - 8
0714014-1	#	52 -
0714014-2	#	52 -
0714014-3	#	52 -15
0714014-4	#	52 - 7
0714014-5		52 -16
0714019-1	#	51 -
0714019-10	#	51 -
0714019-11	#	51 -15
0714019-12	#	51 - 1
0714019-13		51 -17
0714019-14		51 -11
0714019-15	#	51 -16
0714019-16	#	51 -10
0714019-2	#	51 -15
0714019-3	#	51 - 1
0714019-4		51 -17
0714019-5		51 -11
0714019-6	#	51 -16
0714019-7	#	51 -10
0714020-1	#	52A-
0714020-10		52A- 8
0714020-11		52A-24
0714020-12	#	52A- 1
0714020-13	#	52A-
0714020-14	#	52 -
0714020-15	#	52A-18
0714020-16	#	52A-18
0714020-17	#	52A- 7
0714020-18	#	52A-23
0714020-19		52A-24
0714020-2	#	52A-
0714020-20		52A- 8
0714020-3	#	52A- 1
0714020-4	#	52A-18
0714020-5	#	52A-18
0714020-6	#	52A-23
0714020-7	#	52A- 7
0714021-1		53 -
0714021-10	#	53 - 8
0714021-11		53 - 9
0714021-12		53 - 9
0714021-13		53 -35
0714021-14		53 -35
0714021-17		53 -

PART NUMBER		FIGURE AND INDEX NO.
0714021-18	#	53 -
0714021-19	#	53 -24
0714021-2	#	53 -
0714021-20	#	53 -24
0714021-21	#	53 -33
0714021-22	#	53 -34
0714021-23	#	53 - 8
0714021-24	#	53 - 8
0714021-25		53 - 9
0714021-26		53 - 9
0714021-27		53 -35
0714021-28		53 -35
0714021-3	#	53 -24
0714021-4	#	53 -24
0714021-5	#	53 -33
0714021-6	#	53 -34
0714021-8	#	53 - 8
0714022-1		54 -
0714022-2	#	54 -12
0714022-3	#	54 -10
0714022-4		54 -
0714022-5	#	54 -12
0714022-6	#	54 -10
0714023-1	¤	53 -37
0714023-2	¤	53 -38
0715010-2	¤	47 -19
0715016-1	¤	53 -37
0715016-2	¤	53 -38
0715017-1		53 -10
0715023-1	¤	49 -27
0715023-16	¤	49 -24
0715023-3	¤	49 -25
0715023-5	¤	47 -16
0715023-8	¤	47 -17
0715024-1	¤	49 -10
0715024-2	¤	49 -11
0715026-1		54 -20
0715031-1	¤	48 - 9A
0715032-15	¤	48 -10
0715032-16	¤	48 -10
0715033-1		43 -42
0715033-1		44 -49
0715033-1		44A-59
0715036-1	#	49 - 1
0715036-2	#	49 - 2
0715036-3	#	48 - 1
0715036-4	#	48 - 1
0715036-5	#	49 -18
0715036-6	#	49 -19
0715038-1		47 -20
0715039-3	#	49 -20
0715039-4	#	49 -20
0715043-1	#	49 -37
0715043-3	#	49 -38
0715043-4	#	49 -39
0715043-5	#	49 -34
0715043-6	#	49 -33
0715043-7	#	49 -31
0715043-8	#	49 -32
0715043-9	#	49 -34
0715044-1	¤	49 -13
0715044-2	¤	49 -14
0715044-3	¤	47 -10
0715044-4		47 -11
0715044-5	¤	47 -29
0715044-8	¤	49 -14
0715044-9	¤	49 -13
0715045-1		24 - 6
0715045-2		24 - 5
0715046-4		78 -30
0715046-4		78A-38
0715046-8		78A-39
0715048-1		24 -66
0715049-1	¤	49 -17

PART NUMBER		FIGURE AND INDEX NO.
0715052-1	¤	49 -23
0715052-2	¤	49 -22
0715053-1	¤	49 -27A
0715054-1		26 -71
0715056-1		43 -31A
0715056-1		44 -28A
0715056-1		44A-32
0715057-1	#	49 - 1
0715057-11	#	48 - 1
0715057-12	#	48 - 1
0715057-2	#	49 - 2
0715057-21	#	49 -18
0715057-22	#	49 -19
0715057-42	#	48 - 1
0715059-1	¤	101 -24
0715060-1		44 -55
0715061-1		44 -55
0715061-2		44 -55
0715068-1	¤	72A-25
0715068-2	¤	72A-25
0715069-1	¤	48 -10
0716125-2		8 -10
0716127-1		8 -12
0716127-1		87 - 1
0716136-1		88 -20
0716607-3		87 -30
0716611-1		87 -28
0716613-1		87 -24
0716613-200		87 -26
0716614-6		8 -45
0716615-1		87 -31
0716615-2		87 -31
0716616-1		87 - 6
0716617-1		87 -10
0716617-2		87 -11
0716622-1		87 - 7
0716623-2		87 -34
0716624-1		87 -37
0717010-15		43 -62A
0717010-15		44A-63
0717010-16		44 -46
0717010-23		43 -46
0717010-24		44 -26
0717010-24		44A-29
0717010-27		44 -47
0717011-1	#	48 - 2
0717011-2	#	48 - 2
0717012-3		43 -31
0717012-4		44 -28
0717012-4		44A-31
0717012-5		43 -30
0717012-5		44 -27
0717012-5		44A-30
0720005-3		4 -40
0720601-100		7 -10
0720601-101		7 -10
0720601-21		7 - 9
0720601-98		7 -10
0720601-99		7 -10
0720606-10		4 -36
0720606-3		4 -35
0720606-5		4 -35
0720606-8		4 -36
0720612-1		7 - 7
0720612-2		7 - 4
0720613-1		3 -40
0720613-2		3 -40
0720614-1		3 -38
0720614-2		3 -38
0720617-5		4 - 9
0720618-1		3 -34
0720618-2		3 -34
0720619-1		3 -34
0720619-2		3 -34

PART NUMBER	FIGURE AND INDEX NO.
0721100-6	4 - 7
0721100-6	4 -15
0721100-7	4 - 8
0721100-7	4 -14
0721105-13	86 -24
0721105-14	86 -22
0721105-15	86 -22
0721105-3	86 -25
0721105-4	86 -26
0721105-5	86 -28
0721105-8	86 -27
0721107-1	4 -25
0721107-2	4 -25
0721111-21	4 -10
0721111-23	4 -12
0721111-24	4 -12
0721111-25	4 -10
0721111-3	4 -44
0721111-33	4 -44
0721114-2	5 -15
0721114-2	86 -21
0721115-1	5 -16
0721115-1	86 -20
0721117-1	4 -36
0721117-3	4 -35
0721306-1	8 -37
0721400-13	6 - 8
0721400-14	6 - 8
0721400-17	6 - 9
0721400-18	6 - 9
0721400-3	6 - 1
0721400-31	6 -20
0721400-32	6 - 3
0721400-33	6 -19
0721400-35	6 - 5
0721400-4	6 - 1
0721401-11	6 -
0721401-12	6 -
0721401-15	6 -17
0721401-16	6 -17
0721401-37	6 -12
0721401-38	6 -12
0721401-5	6 -18
0721401-6	6 -18
0721402-1	6 -11
0721402-2	6 -11
0721402-3	6 -10
0721402-4	6 -10
0722008-1	7 -16
0722008-2	7 -16
0722009-1	7 -14
0722009-2	7 -14
0722012-11	4 -41
0722012-16	4 -41
0722014-1	7 -14
0722014-21	7 -14
0722015-60	7 -16
0722015-61	7 -16
0722017-1	4 - 5
0722017-2	4 - 5
0722180-13	5 - 1
0722180-14	5 - 1
0722180-19	5 - 1
0722180-20	5 - 1
0722180-49	5 -17
0722180-50	5 -18
0722180-51	5 -16
0722180-52	5 -16
0722180-54	5 -
0722180-55	5 -
0722180-56	5 - 1
0722180-57	5 - 1
0722180-58	5 -
0722180-59	5 -

PART NUMBER	FIGURE AND INDEX NO.
0722180-60	5 - 1
0722180-61	5 - 1
0722182-13	7 - 1
0722182-14	7 - 5
0722182-15	7 - 5
0722182-16	7 - 1
0722182-17	7 - 5
0722182-17	7 - 5
0722182-19	7 -11
0722182-24	7 -12
0722182-28	4 -
0722182-29	4 -
0722182-30	4 -
0722182-31	4 -
0722183-1	5 - 2
0722183-2	5 - 2
0722184-2	5 -10
0722185-1	5 -11
0722185-2	5 -12
0722186-1	5 -13
0722187-7	4 -46
0722187-8	4 -46
0722188-1	5 -20
0722188-2	5 -21
0722189-1	5 -22
0722189-2	5 -23
0722190-1	5 -24
0722190-2	5 -25
0722191-1	5 -26
0722191-2	5 -27
0722192-1	5 -28
0722192-2	5 -29
0722193-1	5 -30
0722193-2	5 -31
0722194-1	4 -17
0722194-11	4 -17
0722194-12	4 -17
0722194-2	4 -17
0722195-1	4 -18
0722196-2	4 -20
0722197-3	4 -21
0722197-4	4 -21
0722198-1	4 -22
0722199-1	4 -23
0722200-1	4 -24
0722200-2	4 -24
0722201-1	4 -16
0722202-1	5 - 7
0722204-1	5 - 2
0722204-2	5 - 2
0722707-1	6 - 6
0723200-10	3 -22
0723200-11	3 -22
0723200-12	3 -22
0723200-5	3 -21
0723200-6	3 -21
0723200-9	3 -22
0723201-1	3 -31
0723201-2	3 -31
0723201-3	3 -31
0723201-4	3 -31
0723600-6	12 -11
0723605-3	12 -16
0723605-4	12 -16
0723605-6	3 -15
0723605-6	12 -21
0723605-7	3 -14
0723605-7	12 -20
0723605-8	3 -15
0723605-8	12 -21
0723605-9	3 -14
0723605-9	12 -20
0723610-5	12 - 1
0723610-6	12 - 1

PART NUMBER	FIGURE AND INDEX NO.
0723612-3	12 -17
0723612-4	12 -17
0723614-1	12 -10
0724115-1	10 -21
0724115-3	10 -21
0724115-4	10 -21
0726001-17	8 - 1
0726001-18	8 - 1
0726001-3	8 - 3
0726001-7	8 -29
0726002-1	8 -25
0726002-1	8 -25
0726003-14	8 - 8
0726110-1	8 -26
0726603-16	8 - 7
072758-1	26 -33
0731602-1	13 -18
0731602-2	13 -19
0731604-7	13A-31
0731604-8	13A-32
0731606-1	13 -37
0731606-1	13A-36
0731606-10	13 -37
0731606-10	13A-36
0731606-6-791	14 -31
0731606-9-791	14 -31
0731607-1	96 - 9
0732001-1	82A-35
0732001-3	82A-38
0732002-1	82A-40
0732002-3	82A-43
0732100-10	16 -31
0732100-4	16 -30
0732100-6	15 -11
0732100-7	15 -12
0732101-4	15 -10
0732106	15 -33
0732106-1	15 -32
0732600-3	15 -42
0732601-3	15 -48
0732603-2	15 - 9
0732610-5	15 -17
0732610-6	15 -18
0732611-1	15 -23
0732611-2	15 -24
0732611-3	15 -25
0732611-4	15 -26
0732611-6	15 -27
0732614-1	15 -56
0732614-2	15 -57
0732615-5	15 -53
0732615-6	15 -54
0733103-1	14 -18
0733104-2	14 -12
0733113-1	14 -17
0733113-1	14 -18
0734102-2	16 - 6
0734102-7	16 -11
0734102-8	16 -12
0734110-1	16 - 5
0734110-2	16 - 5
0734110-3	16 - 9
0734110-4	16 -10
0734110-5	16 - 7
0734110-6	16 - 8
0734110-7	16 -13
0734600-17	16 -46
0734600-8	16 -44
0734602-2	16 -14
0734602-3	16 -16
0734602-4	16 -18
0734602-5	16 -15
0734602-6	16 -17
0734603-1	16 -40

PART NUMBER	FIGURE AND INDEX NO.
0734605-1	16 -26
0741046-7	40 -58
0741046-8	40 -58
0741047-2	40 -53
0741047-2	40A-53
0741048-7	40 -72
0741048-8	40 -30
0741048-8	40A-30
0741049-5	40A-64
0741049-6	40A-64
0741050-1	40A-54
0741050-2	40A-54
0741051-5	40A-63
0741051-6	40A-63
0741052-200	40A-40
0741052-201	40A-40
0741622-1	40 -46
0741622-1	40A-47
0741622-2	40 -46
0741622-2	40A-47
0741622-3	40 -46
0741622-4	40 -46
0741623-1	40 - 9
0741623-1	40A- 9
0741623-4	40 -14
0741623-4	40A-14
0741624-1	40 -44
0741624-1	40A-45
0741624-17	40 -44
0741624-18	40 -44
0741624-2	40 -44
0741624-2	40A-45
0741626-1	27 - 4
0741626-2	27 - 5
0741627-1	27 - 1
0741627-2	27 - 2
0741629-1	40 - 4
0741629-1	40A- 4
0741629-2	40 - 4
0741629-2	40A- 4
0741630-1	40 - 1
0741630-1	40A- 1
0741630-2	40 - 1
0741630-2	40A-
0741632-1	40 - 6
0741632-1	40A- 6
0741633-1	40 - 7
0741633-1	40A- 7
0741634-17	40 -64
0741634-18	40 -64
0741634-5	40 -68
0741639-5	40A-45
0741639-6	40A-45
0741640-1	40A-47
0741640-2	40A-47
0741641-1	40A-72
0741641-2	40A-72
0741641-5	40A-74
0741641-7	40A-73A
0742410-27	34 -23
0742410-8	34 -26
0743009-1	34 -21
0743601-1	36 -27
0743602-1	35 - 1
0743604-6	34 - 7
0743606-2	18 -15
0743607-1	36 - 1
0743608-1	35 -13
0743608-2	35 -14
0743610-1	35 - 4
0743612-1	36 - 9
0743621-4	36 - 2
0743621-9	36 -14
0743622-1	39 -14

PART NUMBER	FIGURE AND INDEX NO.
0743623-1	39 - 8
0743623-3	39 -10
0743623-4	39 -11
0743623-6	39 - 9
0743624-1	39 -
0743625-15	34 -31
0743626-5	36 -11
0743627-5	34 -32
0743627-6	34 -32
0743628-1	34 - 9
0750032-1	87 -40
0750038-3	66 -23
0750038-4	65 -45
0750038-4	66 -22
0750111-19	65 -23
0750113-1	65 -26
0750117-21	69 -78
0750117-31	69 -95
0750121	65 -36
0750125-1	89 - 1
0750125-10	89 -15
0750125-11	89 -14
0750125-2	89 - 2
0750125-3	89 - 3
0750125-4	89 - 6
0750125-5	89 - 9
0750125-6	89 -10
0750125-7	89 -11
0750125-8	89 -12
0750125-9	89 -13
0750126-4	65 -28
0750128-11	69 -74
0750128-11	69 -85
0750131-1	65 -20
0750132-1	65 - 3
0750132-2	65 - 4
0750133-22	65 -29
0750133-7	65 -21
0750133-8	65 -22
0750133-9	65 -25
0750135-1	69 -86
0750135-1	69 -89
0750135-3	69 -92
0750135-4	69 -93
0750137	65 - 2
0750138	64 -21
0750139	64 -42
0750142-1	65 -33
0750142-1	66 -19
0750144-20	65 -30
0750144-21	65 -18
0750152-1	69 -24
0750152-3	69 -38
0750156-1	65 -27
0750159-1	64 -41
0750161-22	68 - 3
0750161-22	68A- 3
0750161-24	68 - 2
0750161-24	68A- 2
0750161-25	68 - 8
0750161-36	68 - 7
0750161-58	68 - 6
0750161-58	68A- 7
0750161-61	68 - 5
0750161-61	68A- 6
0750161-67	68 - 1
0750161-72	68 -
0750212-1	65 -55
0750220-1	98 - 9
0750225-1	65 -47
0750225-2	65 -49
0750230-1	88 -29
0750236-1	63 -67
0750236-3	63 -67

PART NUMBER	FIGURE AND INDEX NO.
0750238-1	68A-
0750238-2	68A- 1
0750238-5	68A- 5
0750282-1	64 -43
0750607-4	65 -46
0750607-5	65 -46
0750612-1	64 -28
0751600-1	65 - 8
075180-3	55 - 6
075180-5	55 -11
075180-6	55 -78
075180-8 □	57 - 1
0752005-4	61 - 6
0752016-10	63 -44
0752016-11	63 -44
0752016-14	63 -44
0752016-7	63 -44
0752021-1	63 -44
0752023-1	8 -40
0752023-1	63 -45
0752023-1	63 -47
0752023-2	8 -41
0752023-4	63 -48
0752023-5	63 -46
0752026-6	63 -44
0752032-1	63 -65
0752037-1	65 -40
0752038-1	65 -41
0752047-1	63 -44
0752048-1	63 -44
0752055-1	63 -89
0752055-1	65 -45
0752056-10	63 -27
0752056-12	63 -61
0752056-14	63 -24
0752056-2	63 -61
0752056-8	63 -24
0752058-1	63 -59
0752058-3	63 -58
0752058-4	63 -60
0752059-17	63 -64
0752059-18	63 -64
0752602-13	63 -43
0752606-1	63 -54
0752609-13	63 -49
0752609-14	63 -50
0752609-15	63 -51
0752609-16	63 -52
0752609-20	63 -76
0752609-202	63 -68
0752609-203	63 -69
0752609-205	63 -69
0752609-27	63 -78
0752609-28	63 -72
0752609-29	63 -73
0752609-30	63 -74
0752609-31	63 -75
0752609-35	63 -71
0752609-39	63 -76A
0752609-40	63 -76B
0752609-46	63 -52
0752609-47	63 -51
0752609-5	63 -76A
0752609-6	63 -76B
0752610-1	93 -13
0752611-1	93 -11
0752612-1	63 -55
0752612-2	63 -55
0752620-1	61 -11
0752625-200	63 -77
0752637-1	61 - 5
0752637-11	61 - 3
0752641-1	71 - 5
0752641-7	71 - 5

PART NUMBER	FIGURE AND INDEX NO.
0752644-1	63 -86
0752644-2	63 -87
0752644-5	63 -80
0752644-6	63 -81
0752645-1	63 -66
0752645-2	63 -66
0752646-1	63 -84
0752647-10	71 - 2
0752647-5	71 - 1
0752647-6	71 - 2
0752647-9	71 - 1
0752673-1	63 -70
0752700-16	63 -40
0752700-8	63 -39
0752700-9	63 -38
0752706-200	63 -28
0752706-201	63 -28
0752706-29	63 -52
0752706-30	63 -53
0752706-38	63 -41
0752706-39	63 -32
0752706-40	63 -33
0752706-41	63 - 3
0752706-42	63 - 4
0752706-43	63 - 5
0752706-44	63 - 6
0752706-46	63 - 7
0752706-47	63 - 1
0752706-48	63 - 9
0752706-49	63 - 2
0752706-51	63 - 8
0752706-53	63 - 1
0752706-7	63 -29
0752706-8	63 -30
0752707-1	63 -79
0753000-13	22 -27
0753003-1	23 -22
0753004-1	22 -28
0753004-2	22 -28
0753010-1	73 - 2
0753011-1	73 - 1
0753027-1	18 -38
0753027-2	18 -39
0753028-1	18 -74
0753028-2	18 -74
0753029-1	22 -13
0753030-1	22 -14
0753030-2	22 -15
0753030-3	22 -16
0753030-6	22 -17
0753030-7	22 -17
0753030-8	22 -18
0753102-1	22 - 7
0753102-10	22 - 8
0753102-2	22 - 8
0753102-9	22 - 8
0753103-2	22 -
0753105-3	22 - 4
0753106-8	22 - 6
0753107-4	22 - 9
0753107-7	22 -10
0753107-8	22 -11
0753108-3	22 - 5
0753108-4	22 - 5
0753600-11	22 - 2
0753600-12	22 - 3
0753600-14	22 -23
0753600-19	22 - 1
0753601-16	18 -68
0753601-16	22 -36
0753602-1	22 -22
0755001-21	69 -11
0755001-23	69 -12
0755001-24	69 -13

PART NUMBER	FIGURE AND INDEX NO.
0755001-25	69 -15
0755001-25	69 -28
0755001-27	69 -17
0755001-28	69 -16
0755001-30	69 -26
0755003-15	69 -50
0755003-16	69 -65
0755004-2	69 -77
0755004-3	69 -71
0755004-6	69 -80
0755004-9	69 -68
0755005-1	69 - 1
0755005-3	69 - 3
0755005-4	69 - 4
0755005-5	69 - 5
0755005-6	69 - 6
0755006-1	69 -42
0755007-1	69 - 7
0755008-1	69 -58
0755009-1	69 -20
0755010-1	69 -22
0755011-1	69 -35
0755012-1	69 -29
0755012-2	69 -33
0755012-4	69 -30
0755040-1	69 -40
0755040-2	69 -56
0755040-3	69 -48
0755040-4	69 -63
0755045-1	69 -47
0755045-1	69 -67C
0755046-1	69 -49
0755046-1	69 -57
0756005-1	88 -
0756005-2	88 -18
0756008-1	88 - 3
0756009-1	88 - 9
0756009-8	88 -10
0756010-1	88 -13
0756011-1	88 - 8
0756012-1	88 -16
0756014-1	88 -11
0756014-2	88 -15
0756015-1	88 - 5
0756022-1	90 -14
0760011-2	10 -18
0760014-1	21 -20
0760016-1	78 - 2
0760016-4	78A- 2
0760017-2	78 - 4
0760017-2	78A- 4
0760018-1	78 - 7
0760018-1	78A- 7
0760019-1	78 - 1
0760019-1	78A- 1
0760019-10	78A- 1
0760019-12	78A- 1
0760019-15	78A- 1
0760019-3	78 - 1
0760021-1	78 -21
0760021-1	78A-24
0760022-1	78 - 8
0760023-1	78 -17A
0760023-1	78A-19
0760026-1	87 -47
0760029-1	78A- 7
0760101-3	77 -26
0760103-1	77 -28
0760104-2	77 -38
0760105-5	18 -62
0760105-6	18 -62
0760106-1	77 -65
0760107-1	77 -67
0760107-2	77 -67

PART NUMBER	FIGURE AND INDEX NO.
0760121-1	77 -38
0760128-1	85 -30
0760129-1	32 -30
0760130-1	81 -19
0760133-1	82 -22
0760602-1	19 -21
0760602-2	19 -21
0760604-1	75 -32
0760604-2	75 -33
0760605-1	75 -34
0760607-3	4 -47
0760607-4	4 -47
0760609-1	80 -37
0760610-1	80 -25
0760610-2	80 -32
0760610-4	82 -30
0760612-7	83 -29
0760614-1	83 -48
0760615-1	80 -50
0760615-1	83 - 9
0760616-1	80 -50
0760616-1	83 - 9
0760617-1	4 -45
0760618-1	4 -37
0760618-2	4 -38
0760619-1	83 -38
0760620-1	83 -47
0760620-9	83 -47
0760621-1	32 -17
0760621-2	32 -18
0760622-1	35 - 6
0760630-1	35 -12
0760633-1	77 -40
0760642-2	77 -19
0760644-1	77 - 3
0760646-2	77 - 2
0760649-2	77 -66
0760651-2	77 -38
0760654-1	77 -50
0760655-1	77 -51
0760660-1	35 -10A
0760667-2	85 -26
0760669-1	75 - 7
0760669-3	75 -22
0760671-1	85 -27
0760673-1	22 -26
0760674-1	77 -30
0760675-5	81 -10
0760676-1	16 -58
0760678-1	75 - 2
0760678-2	75 - 3
0760680-1	80 -26
0760680-2	80 -26
0760681-1	77 -38
0760682-1	75 - 5A
0760685-1	81 -25
0760686-1	77 -56
0760686-2	77 -57
0760687-2	81 -18
0760691-1	18 -40
0760691-1	77 -33
0760691-2	18 -41
0760691-2	77 -33
0760693-1	77 -54
0760693-2	77 -55
0760695-1	77 -33
0760695-2	77 -33
0760695-3	77 -33
0760695-3	77 -33
0760699-1	77 - 5
0760700-1	77 -64
0760701-1	77 -68
0760703-1	10 - 1
0760703-2	10 - 1

PART NUMBER	FIGURE AND INDEX NO.
0760703-5	80 -38
0760703-6	80 -38
0760705-1	10 - 1
0760705-2	10 - 1
0761202-2	81 -21
0761202-4	81 -14
0761210-1	79 - 9
0761210-5	79 -11
0762007-2	18 -28
0762024-24	83 -30
0762035-1	97 - 1
0762036-1	97 - 4
0762037-3	20 -20
0762037-7	20 -19
0762038-1	84 -22
0762038-2	84 -25
0762039-1	84 -19
0762040-1	84 -26
0762041-1	84 -23
0762042-1	18 -25A
0762043-2	27 -25
0762044-1	25 -22
0762045-3	26 -68
0762046-1	22 -29
0762047-2	25 -12
0762048-1	84 -44
0762049-1	84 - 8
0762050-1	84 - 3
0762053-1	25 -12
0770610PA10	93 -57
0770610PA11	93 -56
0770610PA13	93 -28
0770610PC2	93 -27
0770719-2	55 -71
0770719-2	93 -32
0770750-254	92 -60
0770750-254	92 -98D
0770750-254	92A-58
0782001-1	74 - 8
0800030-19	92 -51
0800030-19	92A-49
0811490-6	74 -34
08125	37 - 4
0813150-54	74 -34
0813150-55	74 -27
0813156-4	74 -28
08231	37 - 7
0841200-15	36 -20
0841200-19	36 -17
0841200-25	36 -19
0851700-96	69 -94
1/16X.62TYPE3	82B-11
1K1-6-10	91 -35
1K66-1	91 -38
10-4677C	92 -35
10-4677C	92A-32
10-8001C	92 -68
10-8001C	92 -69
10-8001C	92A-63
10-8001C	92A-64
100PDLT44-6	63 -70
1007	1 - 4
1024A-8	1 - 3
110691	1 -55
110691	55 -50
110691	55A-52
12-4862	92 -65
12-4862	92A-61
12RB	78 -18
12RB	78A-18
1200065-23	8 - 2
1200065-24	8 - 2
1200106-108	65 -11
1200106-138	65 -61

PART NUMBER		FIGURE AND INDEX NO.
1200106-51		87 - 1
1200107-51		92A-82
1200107-52		92A-83
1200127-1		49 -30
1200136-1		52 -48
1200136-1		52A-56
1200138-2		52 -33
1200138-2		52 -55
1200138-2		52A-41
1200138-2		52A-63
1200159-3		52 -53
1200159-3		52A-61
1200191-4		71 - 8
1200191-5		71 - 9
1200191-6		71 -10
1200191-7		71 -11
1200191-8		71 -12
1200217-26		50 -10
1200217-4		50 - 8
1200217-5		50 - 9
1200231-1	□	49 - 7
1200231-2	□	49 - 8
1200415-7		92 -36
1200417-100		92A-87
1200417-101		92A-88
1200417-102		92A-85
1200417-17		92 -94A
1200417-51		92 -90
1200417-52		92 -91
1200417-69		92 -93
1200417-84		92 -96B
1200417-85		92 -95A
1200417-94		92 -96D
1200417-94		92A-94
1200417-95		92 -94A
1200417-99		92A-89
1200503-1		51 -45
1200504-3		51 -43
1200612-5		47 -23
1200612-6		47 -28
1200637-2		72 -16
1200637-2		72A-10
1200637-5		5 - 9
1200691-1		72 -22
1200691-1		72A-14
1200749-1		55 -55
1200749-1		55A-58
1201039-1		58 - 2
1205001-120		2 -34
1205001-121		2 -35
1205001-139		2 -23
1205009-1		2 -25
1205024-1		2 -11
1205024-1		31 -11
1205043-1		2 -12
1205085-1		2 -22
1205086-1		2 -54
1205102-1		2 -46
1205102-2		2 -47
1210020-10		24 -14
1210032-8		24 -63
1210032-9		24 -63
1210051-1		19 -20
1210051-2		19 -20
1210112-11		72A-33
1210112-13		72A-32
1210112-22		72A-30
1210112-23		72A-31
1210112-28		72A-34
1210112-29		72A-26
1210112-4		72A-27
1210427-10		26 -85
1210427-13		26 -80
1210427-14		26 -81

[redacted]

1213321-2	94 - 7
1213321-2	94 -23
1213327-1	56 - 8
1213327-1	56 -19
1213327-10	55A- 6
1213327-10	56 -20
1213327-10	56 -29
1213327-12	55B-46
1213327-14	55B-46
1213327-7	55A- 5
1213327-7	56 -13

1215073-10	#	52A-99B
1215073-10	#	53 -40
1217035-1		43 -43
1217035-1		44 -24
1217035-1		44A-27
1217036-10		44 -51B
1217036-10		44A-54
1217036-3		43 -42A
1217036-4		44 -51B
1217036-8		43 -42A
1217038-1		43 -32

1222008-2	7 -18
1222012-1	3 -13
1222013-7	7 -17
1222013-7	7 -19
1222013-8	7 -17
1222013-8	7 -19
1222021-1	7 -25
1222022-1	3 -19
1231000-17	13 -33
1231000-18	13 -31
1231000-4	13 -32

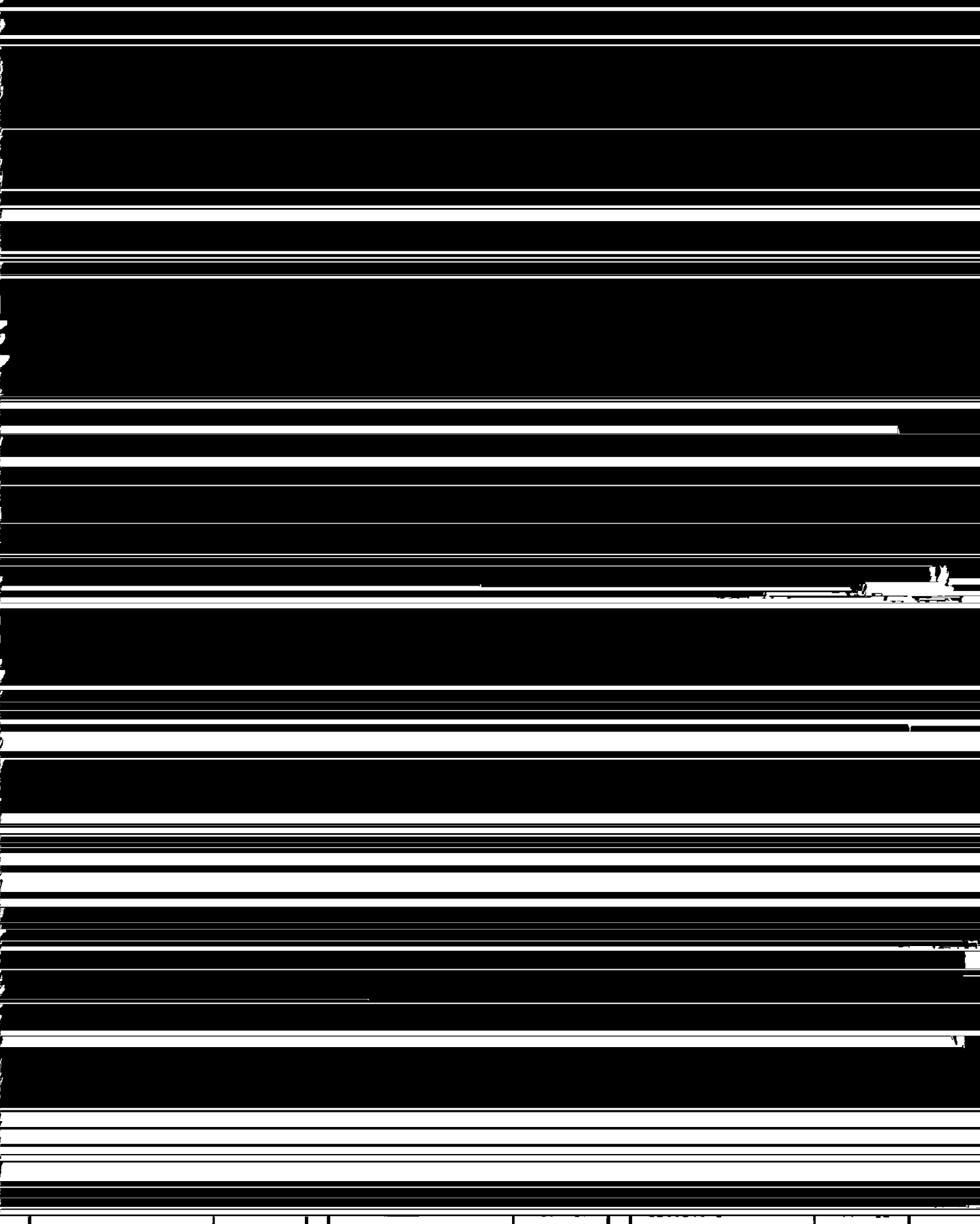

PART NUMBER	FIGURE AND INDEX NO.
1260153-2	82A-17
1260153-5	82A- 1
1260154-1	82A-12
1260155-1	82A-28
1260155-4	82A-10
1260155-5	82A-10
1260156-1	82A-18
1260156-2	82A-24
1260156-3	82A-25
1260156-4	82A-19
1260156-6	82A-23
1260157-1	82A-31
1260157-3	82A-33
1260157-4	82A-30
1260158-1	82A- 2
1260158-3	82A- 6
1260158-5	82A- 8
1260159-1	82A-27
1260474-1	30 -78
1260664-1	77 - 4
1260665-1	77 -13
1260668-3	77 -20
1262001-1	84 -15
1262001-3	55B-10
1262005-1	80 -51
1270060-2	78 -22
1270061-1	78 -22B
1270062-1	78 -22A
1270483-2	78A-21
1270682-1	78 - 9
1270682-1	78A- 8
1270707-1	55B-36
1270707-2	55B-36
1270718-17	13A-40
13836	41 - 3
13889	41 - 9
1411202-201	43 -63
1411202-201	44A-64
1411206-1	43 -37
1411206-1	44 -34
1411206-1	44A-38
1411206-7	43 -34
1411206-7	44 -31
1411206-7	44A-35
1411207-1	43 -39
1411207-1	44 -36
1411207-1	44A-40
1411207-2	43 -40
1411207-2	44 -37
1411207-2	44A-41
1414100-212	51 -31
1414103-2	51 -20
1414103-45	51 -21
1414103-6	51 -22
1414104-39	51 -28
1414104-4	51 - 3
1414104-4	53 -32
1414104-41	51 -30
1414104-42	51 -30
1414104-54	52 -84
1414104-54	52A-95
1414104-61	51 -29
1414104-8	51 -41
1414107-1	51 -50
1414107-1	53 -17
1414107-2	53 -17
1414112-1	51 -27
1414116-1	51 -40
1414116-1	52 -70
1414116-1	52A-79
1414211-22	53 -26
1414211-24	53 -11
1414223-34	51 -48
1414230-1	51 -12
1414230-2	53 -36
1414231-2	53 -14
1442113-9	39 - 2
145-10	41 -29
1452530-6	84 - 2
1452533-2	84 -10
1452533-4	84 - 7
1460320-1	75 - 1
1460501-21	75 - 4
1511206-11	45 -16
1511206-20	45 -12
1511206-21	45 -17
1511206-22	45 -17
1511206-4	45 -20
1511207-1	45 -18
1511208-16	45 -24
1511208-17	45 -25
1511209-1	45 -21
1511209-12	45 - 5
1511209-8	45 - 8
1512280-11	84 - 1
1512280-13	84 - 1
1512280-24	84 - 6
1512280-25	84 - 9
1512404	46 -16
1513145-1	78 -33
1513335-1	56 -23
1513839-3	55 - 5
1513839-3	55 -15
1513839-3	55A- 4
1513839-3	55A-17
1513839-3	56 - 7
1513839-3	56 -12
1513839-3	56 -27
1513839-5	55 -16
1513839-5	55A-18
1513839-5	56 - 6
1513839-5	56 -21
1514119-3	52 -62
1514119-3	52A-70
1514223-28	51 -46
153-15	41 - 5
153-8	37 - 2
153839-3	56 -22
154-13	41 - 6
154-6	37 - 3
155-2	37 - 1
1552004-17	63 -14
1552004-17	63 -20
1552004-22	63 -13
1552004-22	63 -19
1552004-25	63 -17
1552004-52	63 -12
1552004-53	63 -18
1552010-1	63 -16
15521010-1	63 -22
1560110-1	78A-168
1560110-3	78 -10
1560110-3	78A- 9
1560312-1	77 -11
1560321-10	82A-20
1560321-14	82A-14
1560321-4	82A-21
1560321-9	82A-22
1562033-13	84 - 3
1562033-4	84 - 4
1570043-3	93 -22
1570043-9	55A-73
1570043-9	93 -32
1570102-1	16 -65
1570102-10	3 -21
1570102-12	14 -36
1570102-16	3 -21
1570102-8	14 -35
1570102-8	14 -36
1570166-1	93 -38
1570306-1	78A-14
1570306-1	78A-34
1570307-1	78A-11
1570307-2	78A-27
1570308-1	78A-25
1570309-1	78A-35
16-2000C	92 -67
16-2000C	92A-62
16-8375C	92 -68
16-8375C	92A-63
16-8500C	92 -69
16-8500C	92A-64
161-31	37 - 5
161-49	41 - 1
1612030-1	58 -38
162-28	37 - 6
162-47	41 - 2
1620058-1	6 -23
1620058-2	6 -23
1620075-3	93 -37
164-40	41 -11
1700127-1	50 -11
1700127-22	50 -17
1700127-23	50 -18
1700127-24	50 -19
1700127-4	50 -12
1700127-7	50 -13
1700127-8	50 -14
1700127-8	50 -16
1700127-9	50 -15
1706015-2	93 - 1
1713039-1	91 -18
1713039-1	91 -23
1713039-1	91 -51
1713269-1	79 -28
1714000-22	52 -83
1714000-22	52A-93
1714000-33	52 -85
1714000-33	52A-96
1714000-41	52A-94
1714003-3	40A-15
1714003-4	40A-15
1714061-1	52 -72
1714061-1	52A-81
1714067-5	52 -67
1714067-5	52A-75
1714074-13	52 -23
1714074-13	52A-31
1714074-14	52 -24
1714074-14	52A-32
1714074-6	52 -25
1714074-6	52A-33
1714100-1 ¤	52A-15A
1714101-1 #	52A-27A
1714101-2 #	52A-27A
1714101-3	51 -50A
1714101-4	51 -50A
1715047-3 ¤	48 - 5
1715047-4 ¤	48 - 5
1741003-3	40 -15
1741003-4	40 -15
1741005-200	40 -40
1741005-200	40A-40
1741005-201	40 -40
1741005-201	40A-40
1741005-21	40 -43
1741005-21	40A-44
1741005-22	40 -43
1741005-22	40A-44
1741005-251	40 -40
1741005-251	40A-40
1741005-252	40 -40

PART NUMBER	FIGURE AND INDEX NO.
1741005-252	40A-40
1741022-1	40 -48
1741022-2	40 -48
1777	33 - 9
180231	67 -33
182747	67 -34
183-1	41 -27
186320	67 -36
188141	67 -25
188302	67 -27
188434	67 -24
189482	67 -19
189574	67 -16
189739	67 -20
189744	67 - 3
191869	67 -28
192558	67 -38
192709	67 -31
193385	67 -15
196195	67 -13
2N3055	93 -40
20H3P	93 -65
2005012-3	2 -41
2005012-4	2 -42
2013131-1	99 - 9
2013142-1	86 -36
2014008-5	52 - 7A
204864	67 - 8
206336	67 - 5
206337	67 -21
210031	67 - 9
210036	67 - 7
210039	67 -23
210216	67 -40
210253	67 - 1
210257	67 -37
210261	67 -10
210293	67 -22
210326	67 -30
210382	67 -11
210393	67 -12
210394	67 -14
210396	67 - 6
210398	67 -32
210399	67 -18
213200	67 -39
213201	67 -29
213214	67 - 2
214202	67 -14
217-1	37 - 8
218446	67 -35
218537	67 -26
218547	67 - 4
22FH632	76 - 4
255-10-30-190	78 -11
2600SW2	63 -11
2600SW2	63 -37
270HM1/2W5%	55 -69
270HM1/2W10%	55 -68
27S3-2	63 -11
27S3-2	63 -36
27S3-3	63 -37
295055	8 - 6
295055	8 - 6
3/32X.375TYPE3	82B-18
3/32X.500TYPE3	82B-21
3021	41 - 8
3022	41 - 7
3023	41 - 4
30370-0102	91 - 3
34002-55	93 -35
3421-0000	78A-36
351-11-05-001	78 -12
35985	66 -21

PART NUMBER	FIGURE AND INDEX NO.
3680C	34 -33
3690-1/2	1 -46
3690-1/4	1 -46
3690-1/8	1 -46
37-206	41 -27
3859A-161-152A	78A-20
3859A-282-251A	78 -19
40S5-4	63 -10
40S5-4	63 -26
4002-H	63 -10
4002-H	63 -26
401627	55 -50
401627	55A-52
40760-0104	91 - 3
40760-0114	91 - 3
4155-308	94 -21
4157-001	78 -17
4157-001	78A-17
4165-308	100 - 5
4165-447	100 - 3
4189	8 -35
4199	8 -35
42540-2114	86A- 3
42540-2214	86A- 3
440437	55 -46
441344	55 -45
442785	55 -48
442785	90 - 5
4509	63 -85
49330	18 -27
5037-1	87 -24
53	94 -22
53	100 - 4
53	100 - 8
534750	66 - 2
538076	66 -16
539911	65 - 7
550	1 -13
5579654	90 - 9
561	41 -17
561	41 -19
576.1	1 - 5
579.6	1 - 6
582384-9	78 -25
600-015-10-0S	39 -16
60232-1	55 -61
60232-1	55A-63
61-37	41 -15
62418	34 -33
6241M	34 -33
6241M	40 -71
6241M	40A-76
625017	66 -11
625303	66 -12
625765	66 - 1
625966	65 -54
626332	65 -52
626332	66 - 8
626341	65 -53
626341	66 -10
626342	65 -53
626342	66 - 9
627392	66 - 5
629076	66 - 3
629176	66 -17
630050	66 - 7
631095	66 - 6
633027	66 -20
633311	66 - 4
634592	66 -17
639171	65 -54
6436635	90 - 7
6436637	90 - 8
6436916	90 -10

PART NUMBER	FIGURE AND INDEX NO.
6436989	90 -11
64881-00	92 -57
64881-00	92A-55
66-30	41 -17
66-30	41 -19
69-4	41 -24
700	1 -11
73-11	41 -18
74-10	41 -16
75-37	41 -28
8-4VTX-S	87 -45
800-001-6	76 - 7
811542	55 -50
811542	55A-52
90DCA-8	62 -45
91-44	41 -14
91-8000AC	92 -66
91-8000AC	92A-62
92-17	41 -20
94	95 -22
97NNTE-048	92A-62
97NTE-048	92 -67